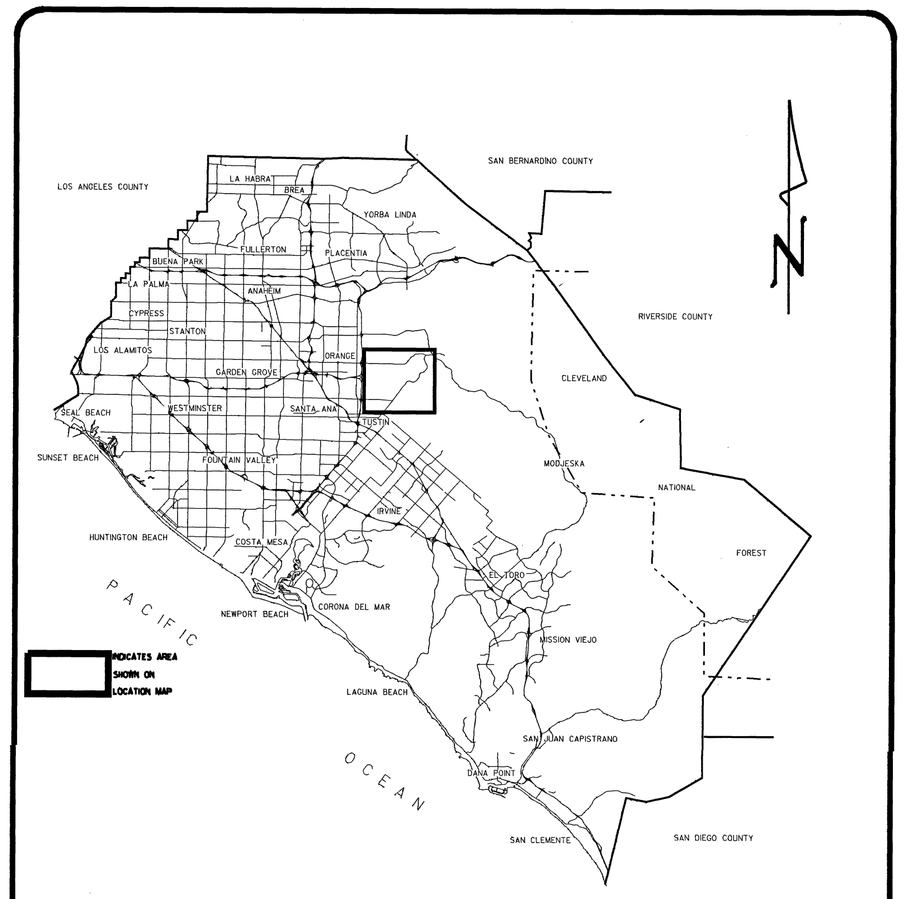
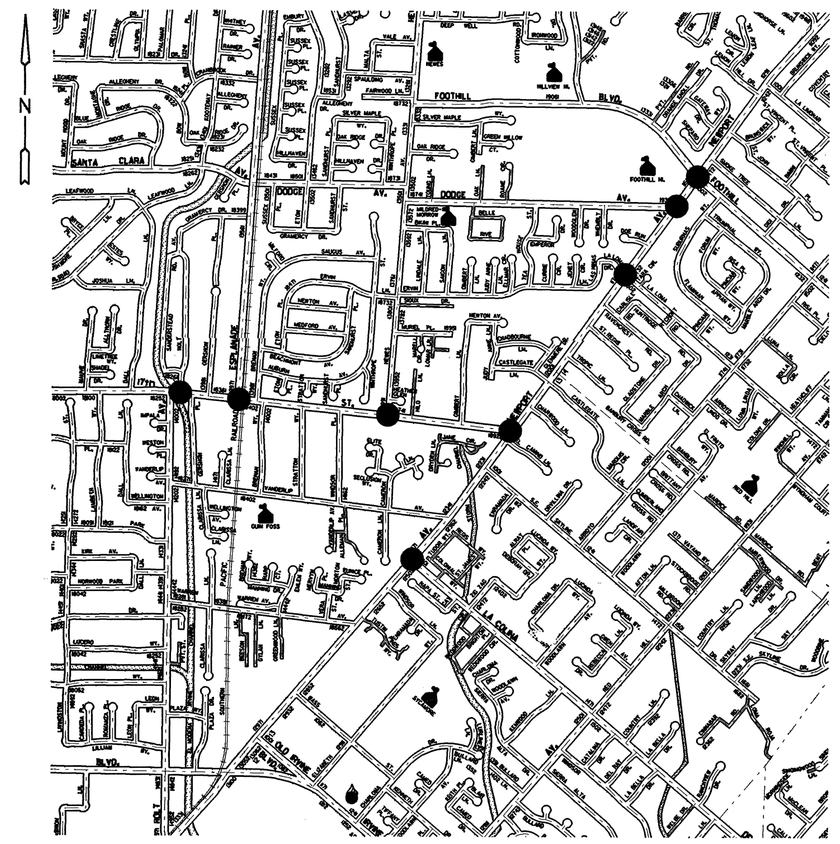


VICINITY MAP

PROJECT LOCATION



LOCATION MAP

ORANGE COUNTY
ENVIRONMENTAL MANAGEMENT AGENCY

SANTA ANA, CALIFORNIA

M. RUANE, DIRECTOR

PLANS FOR INSTALLATION OF

INTERCONNECT FACILITIES, VEHICLE COUNTING SYSTEMS AND SIGNAL MODIFICATIONS AT VARIOUS INTERSECTIONS

ON

NEWPORT BLVD.

AND

SEVENTEENTH STREET

JUNE 1992

FUNDED BY: ROAD FUNDS

EMA-TRANSPORTATION

SUBMITTED: Lance M. Natsuhara — 5/27/92
Sr. CIVIL ENGINEER RCE 42679 (3-31-96) DATE
LANCE NATSUHARA

RECOMMENDED: [illegible] — 6/8/92
TRAFFIC ENGINEER RCE 35217 (9-30-93) DATE
I. G. OCHOA RTE 1183 (12-31-91)

APPROVED: K R Smith — 6/11/92
DIRECTOR OF TRANSPORTATION DATE
KEN R. SMITH

INDEX OF SHEETS

SHEET	DESCRIPTION	COMPLETE	TURN ON
1	TITLE SHEET		
2	INTERCONNECT PLANS		
3	INTERCONNECT PLANS		
4	INTERCONNECT PLANS	COMPLETE	TURN ON
5	NEWPORT AT FOOTHILL	5/18/93	5/18/93
6	NEWPORT AT DODGE	9/23/93	9/23/93
7	NEWPORT AT LA LOMA	5/19/93	5/19/93
8	NEWPORT AT SEVENTEENTH STREET	▲	
9	NEWPORT AT LA COLINA	5/19/93	5/19/93
10	SEVENTEENTH ST. AT HEWES	▲	
11	SEVENTEENTH ST. AT ESPLANADE	▲	
12	SEVENTEENTH ST. AT HOLT	▲	
13	DETAIL SHEET		

▲ "TURN ON" NOT REQUIRED

AS-BUILT PLANS

INSP: B. B. HEDRICK
SUPVR. INSP.: D. GOYA
CONTRACTOR: ANTELOPE VALLEY SIGNAL

UTILITY OWNER	CONTACT	PHONE NO.
EAST ORANGE COUNTY WATER DIST.	DALE HEUERMAN	(714)538-5815
PACIFIC BELL	KEN LAPHAM	(714)259-4485
SOUTHERN CALIFORNIA WATER CO.	KYLE SNAY	(714)259-4500
SOUTHERN CALIFORNIA EDISON CO.	AL DAY	(714)973-5455
SOUTHERN CALIFORNIA GAS CO.	DON JONES	(714)634-3262
DIMENSION CABLE SYSTEMS	DARLA WAGNER	(714)240-8828 x358
COUNTY SANITATION DIST. OF O.C.	RUSS WOLD	(714)962-2411 x538
LEMON HEIGHTS MUTUAL WATER CO.	DALE HEUERMAN	(714)544-2696
CITY OF TUSTIN WATER DEPT.	GARY VEEH	(714)544-8890

BENCH MARK:

BASIS OF BEARINGS:

NO.	DESCRIPTION	SHT.	APPROVED	DATE

REVISIONS

W. O. NO. R09753

SHEET 1 OF 13

DRAWING NUMBER
INTERCONNECT FACILITIES, VEHICLE COUNTING SYSTEMS AND SIGNAL MODIFICATIONS
DRAWING NUMBER
170.1
DRAWING NUMBER
newtit.m requested from traf on black_D. Wed May 20 15:30:09 PDT 1992

St. John Pl

Smoke Tree Ln

E OVERHEAD

EX. #3 1/2 P.B.

EXIST. CONDUIT & I.C. CONDUCTOR

EX. 1 1/2" CONDUIT WITH 2 DLC. (EX. ADVANCE DETECTION CONDUIT)

EX. #6 P.B.

(INTO SIDE OF CONTROLLER CABINET)

(USE #5 P.B.)

SEE SIGNAL PLAN FOR CONTROLLER CABINET, DETECTOR, AND INTERSECTION MODIFICATION.

EX. 1 1/2" CONDUIT WITH 5 PAIR #18 INTERCONNECT CABLE.

REMOVE AND PULL EXCESS IC CABLE THRU NEW CONDUIT. (TYP)

TO LA LOMA

SEE SIGNAL PLAN FOR CONTROLLER, DETECTOR, AND INTERSECTION MODIFICATION.

#3 1/2 P.B. (TYP)

Foothill Blvd

NEWPORT AVENUE

Dodge Ave

Ravencrest Rd

SEE SIGNAL PLAN FOR CABINET, DETECTOR, AND INTERSECTION MODIFICATION.

Doe Run

NEWPORT AVENUE

La Loma Dr

CONSTRUCTION NOTES:

1. INSTALL 2" CONDUIT.
2. INSTALL INTERCONNECT SPLICE CABINET AND FOUNDATION PER DETAIL "F".
3. INSTALL 12 PAIR #22 INTERCONNECT CABLE.
4. INSTALL #3 1/2 PULL BOX.
5. REMOVE EXISTING DLC AND INSTALL NEW DLC PER SPECIAL PROVISIONS.
6. PROVIDE INTERCONNECT CABLE FROM SPLICE CABINET TO TELEPHONE DROP.

MARK	DATE	DESCRIPTION
R		RECORD DRAWING (A.M.)

REVISIONS

DESIGNED L. ABAD

DRAWN P. WANG CHECKED L. NATSUHARA

ORANGE COUNTY ENVIRONMENTAL MANAGEMENT AGENCY

INTERCONNECT PLAN FOR NEWPORT BLVD

LARRY N. NATSUHARA No. 42679 Exp. 3/31/95 REGISTERED PROFESSIONAL ENGINEER STATE OF CALIFORNIA CIVIL

PREPARED UNDER SUPERVISION OF RCE 24918 DATE 6/29/92

SCALE AS SHOWN | DATE JUNE 92 | W. O. NO. R09753 | SHEET 2 OF 13

DRAWING NUMBER 170.2

DRAWING NUMBER
WPORT BLVD
DRAWING NUMBER
170.3
DRAWING NUMBER
DRAWING NUMBER



CONSTRUCTION NOTES:

1. INSTALL 2" CONDUIT.
2. INSTALL INTERCONNECT SPLICE CABINET AND FOUNDATION PER DETAIL "F."
3. INSTALL 12 PAIR #22 INTERCONNECT CABLE.
4. INSTALL #3 1/2 PULL BOX.
5. REMOVE EXISTING DLC AND INSTALL NEW DLC PER SPECIAL PROVISIONS.

ORANGE COUNTY
ENVIRONMENTAL MANAGEMENT AGENCY

INTERCONNECT PLAN

FOR

NEWPORT BLVD.

REGISTERED PROFESSIONAL ENGINEER
LAWRENCE NATSUHARA
No. 42679
Exp. 3/31/96
CIVIL
STATE OF CALIFORNIA

MARK	DATE	DESCRIPTION
		REVISIONS

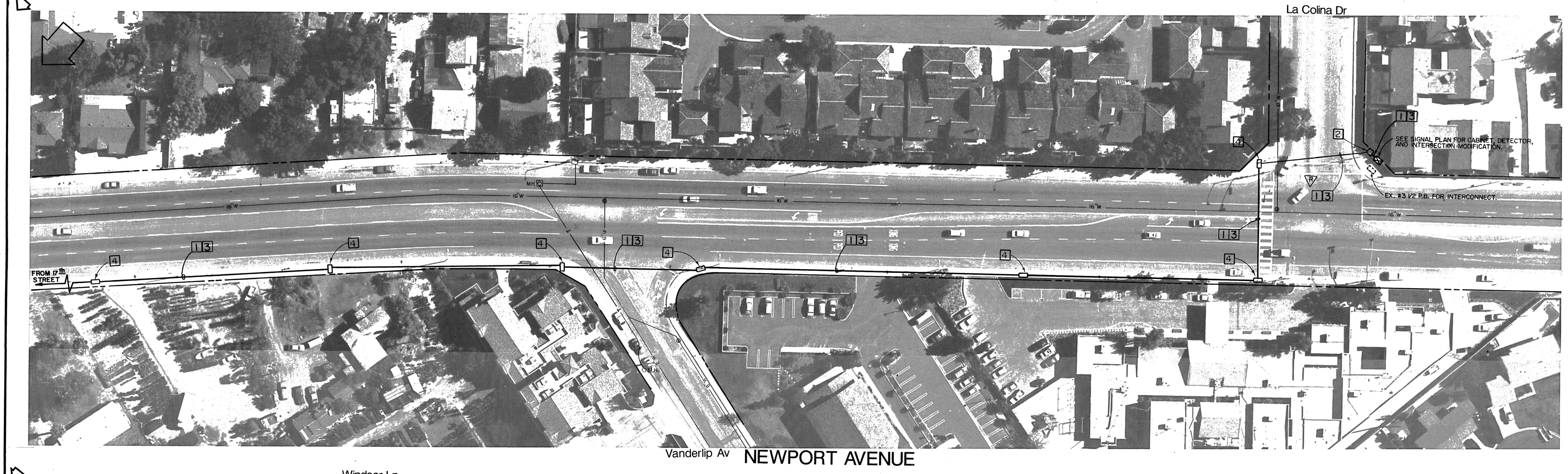
DESIGNED L. ABAD
DRAWN P. WANG
CHECKED L. NATSUHARA

PREPARED UNDER SUPERVISION OF [signature] DATE 5/30/96
RCE 20112

SCALE AS SHOWN
DATE JUNE 92
W. O. NO. R09753

SHEET 3 OF 13

DRAWING NUMBER
ORT BLVD
DRAWING NUMBER
170.4
DRAWING NUMBER



CONSTRUCTION NOTES:

1. INSTALL 2" CONDUIT.
2. INSTALL INTERCONNECT SPLICE CABINET AND FOUNDATION PER DETAIL "F".
3. INSTALL 12 PAIR #22 INTERCONNECT CABLE.
4. INSTALL #3 1/2 PULL BOX.
5. REMOVE EXISTING DLC AND INSTALL NEW DLC PER SPECIAL PROVISIONS.

MARK	DATE	DESCRIPTION
		RECORD DRAWING (A.M.)

REVISIONS

DESIGNED L. ABAD
DRAWN P. WANG CHECKED L. NATSUHARA

ORANGE COUNTY
ENVIRONMENTAL MANAGEMENT AGENCY

INTERCONNECT PLAN FOR NEWPORT BL

REGISTERED PROFESSIONAL ENGINEER — LANCE R. NATSUHARA — No. 42679 Exp. 3/31/96 — CIVIL — STATE OF CALIFORNIA

PREPARED UNDER SUPERVISION OF [signature] RCE 52418 5/29/96

SCALE	DATE	W.O.NO.	
AS SHOWN	JUNE 92	R09753	4 OF 13

DRAWING NUMBER
PLAN HOLD CORPORATION • REORDER BY NUMBER 070A
DRAWING NUMBER
PLAN HOLD CORPORATION • REORDER BY NUMBER 070A
DRAWING NUMBER
170.5
PLAN HOLD CORPORATION • IRVINE, CALIFORNIA
DRAWING NUMBER
ILL BLVD @
RT AVE
PL ON • IRVINE, CALIFORNIA
BY NUMBER 070AR

CONDUCTOR SCHEDULE

AWG	CIRCUIT	RUN 1	RUN 2	RUN 3	RUN 4	AWG
# 14	Ø1	(3)			(6)	# 10
	Ø2			(3)	(3)	
	Ø4			(3)	(3)	
	Ø5	(3)	(3)	(3)	(6)	
	Ø6		(3)		3	DLC
	Ø8	(3)	(3)		(3)	
	Ø2P			(2)	(4)	
	Ø4P		(2)		4	
	Ø6P	(2)	(2)		(2)	
	Ø8P	(2)	(2)	(2)	(4)	
	Ø2PPB			(1)	(2)	
	Ø4PPB	(1)			(2)	
	Ø6PPB	(1)	(1)	(1)	(2)	
	Ø8PPB	(1)	(1)	(1)	(2)	
	PPB COMMON	(1)	(1)	(1)	(2)	
	ISNS	(2)	(2)	(2)	(4)	
	SPARES	(3)	(3)	(3)	(6)	
	TOTAL	(18)	(27)	(18)	(57)	

CONDUIT SCHEDULE

CIRCUIT	RUN 1	RUN 2	RUN 3	RUN 4
SIGNAL & SIGN COMMON	(1)	(1)	(1)	(2)
LUMINAIRE	(2)	(2)	(2)	(4)
TOTAL	(3)	(3)	(3)	(6)
Ø1	(1)	(1)		(1)
Ø2				(3)
Ø4				(2)**3**
Ø5				(1)
Ø6	(3)	(3)		(3)
Ø8			(3)**5**	(3)**5**
TOTAL	(4)	(6)**8**	(3)**5**	(13)**16**

CONDUIT SIZE: 2½" | 3" | 2½" | 3"

(#) = EXISTING
BOLD No. = NEW

PHASE DIAGRAM

	Ø1	Ø2	Ø3	Ø4	Ø5	Ø6	Ø7	Ø8
VEHICULAR & PEDESTRIAN MOVEMENTS	→	←- - - →	X	→	←	←	X	→
NEMA PHASE	Ø1	Ø2		Ø4	Ø5	Ø6		Ø8
COORDINATION FUNCTION		*				*		

1 + 5 | 1 + 6 | 2 + 5 | 2 + 6 | 4 + 8

SEQUENCE WITH CALL ON ALL PHASES

POLE SCHEDULE

NO.	POLE DATA TYPE	POLE DATA HEIGHT	SIGNAL M.A.	H.P.S. LIGHTS M.A.	H.P.S. LIGHTS WATTS	SIGNAL MOUNTING VEH.	SIGNAL MOUNTING M.A.	SIGNAL MOUNTING PED.	P.P.B. PHASE	P.P.B. QUAD	FOUNDATION TYPE	FOUNDATION SIZE	ILLUMINATED SIGN MESSAGE(DBL.FACE)
(1)	III-3I"-3"	EXISTING	18'	12'	400	SV-I-T	MAS	SP-I-CS	Ø2	E	C	EXISTING	Newport
(2)	I-A	10'	--	--	--	TV-I-T	--	SP-I-CS	Ø4	W	S	2'-0"X3'-0"	--
(3)	26-4-70	30'	45'	15'	250	SV-I-T	2-MAS	SP-I-CS	Ø4	W	C	3'-6"X8'-0"	Foothill
(4)	I-A	10'	--	--	--	TV-I-T	--	SP-I-CS	Ø6	N	S	2'-0"X3'-0"	--
(5)	I-A	10'	--	--	--	TV-I-T	--	SP-I-CS	Ø6	N	S	EXISTING	--
(6)	I-A	10'	--	--	--	TV-I-T	--	SP-I-CS	Ø8	E	S	2'-0"X3'-0"	--
(7)	26-4-70	30'	45'	15'	250	SV-I-T	2-MAS	SP-2-CS	Ø8	E	C	3'-6"X8'-0"	Foothill
(8)	IA	10'	--	--	--	(N) **TV-2-T**	--	--	Ø2	E	S	2'-0"X3'-0"	--

C = C.J.D.H.
S = SQUARE
N = NEW

NEWPORT BLVD.

FOOTHILL AVENUE

SMOKE TREE LANE

SCALE: 1" = 20'

EX. 1½"C, 5#19 INTERCONNECT
450' TO CONTROLLER CABINET AT DODGE AVE.

PS1674
EXIST. SERVICE POINT

SPLICE CABINET PER INTERCONNECT CONST. PLANS

I.C. CONDUIT TO ENTER SIDE OF CABINET

EXIST. ENTER SIDE OF CABINET

EX. 1½"C, 2DLC

EX. 1½"C, 2DLC

INTERCONNECT CONDUIT FROM NEWPORT BLVD. PROJECT. EXIST. 2" CONDUIT

(6x6 TYP)

250' TO LIMIT LINE

1-01 (5' X 50')
1-02 (5' X 50')
1-04 (5' X 50')
1-05 (5' X 50')
1-06 (5' X 50')
1-08 (5' X 50')
2-02 (6' X 15')
2-04 (5' X 50')
2-08 (5' X 50')
3-02 (5' X 50')
3-04 (5' X 50')
3-06 (5' X 50')
3-08 (5' X 50')

90' TRANS.

#3½PB

GENERAL NOTES:

- PROTECTED/PERMISSIVE "BACKUP" LOGIC SHALL BE EXTERNAL TO CONTROLLER.
- PAINT ALL EXISTING SIGNAL HEAD HOUSINGS GREEN AND VISORS AND BACK PLATES BLACK PER STANDARD SPECIFICATIONS.
- SEE SHEET 13 FOR ADDITIONAL NOTES.

CONSTRUCTION NOTES:

1 —— REMOVE AND SALVAGE EXISTING SAFETRAN "P" CABINET AND CONTENTS.
2 - PROVIDE AND INSTALL A NEW MULTISONICS 820A CONTROLLER.
3 —— PROVIDE AND INSTALL A NEW TYPE "P" ALUMINUM CABINET (WITH INTERIOR FOUNDATION MOUNTING FLANGES) FULLY WIRED PER SCHEDULES AND SPECIAL PROVISIONS.
4 - INSTALL 2" CONDUIT WITH #5 P.B. AT 200' INTERVALS.
5 —— INSTALL NEW DLC AS INDICATED TO CONTROLLER AND WIRE DLC'S FOR INTENDED OPERATION.
6 - INSTALL DETECTOR LOOPS AS INDICATED.
7 —— ABANDON EXISTING DETECTOR LOOPS.
8 - REMOVE EXISTING DLC AND INSTALL NEW DLC'S PER SCHEDULE AND SPECIAL PROVISIONS.
9 —— SPLICE NEW LOOPS TO EXISTING DLC.
10 - REMOVE AND SALVAGE EXISTING SIGNAL HEADS.
11 —— PROVIDE AND INSTALL NEW 3 SECTION SIGNAL HEAD WITH 12" LENSES AND BACK PLATE PER SCHEDULE.
12 - INSTALL WHEEL CHAIR ACCESS RAMP PER OCEMA STD. PLAN 102-0-0C.
13 —— TRIM TREE AND SHRUBS WITHIN ROAD RIGHT- OF- WAY.

INDUCTIVE LOOP DETECTOR SCHEDULE

(NEW)

SENSOR UNIT	CHANNEL	DETECTOR
1	1	1-05
	2	1-02 (1)
2	1	2-02 (2)
	2	3-02
3	1	1-01
	2	1-06 (5)
4	1	2-06 (6)
	2	3-06
5	1	1-04 (3)
	2	2-04 (4)
6	1	3-04
	2	1-08 (7)
7	1	2-08 (8)
	2	3-08
8	1	4-08
	2	5-08
9	1	EVP (FUTURE)
	2	
10	1	EVP (FUTURE)
	2	

☒ - DETECTOR LOOP LOCATIONS SHALL BE APPROVED BY ENGINEER IN FIELD PRIOR TO INSTALLATION. ALL DETECTOR UNITS SHALL BE RACK MOUNTED. DUAL CHANNEL DUAL OUTPUT PER CHANNEL WITH INTEGRAL COLORGATED EXTENSION AND DELAY CAPABILITY. OUTPUT "A" SHALL BE TIME, OUTPUT "B" SHALL BE PRESENCE MODE FOR SYSTEM SAMPLING ONLY. DETECTORS SHALL NOT EXTEND ON RED.
[#] - VEHICLE COUNTING SYSTEM CHANNEL NUMBER
(#) - SYSTEM SAMPLER NUMBER

½ 0 1 2
3 Inches on original drawing

ORANGE COUNTY
ENVIRONMENTAL MANAGEMENT AGENCY

FOOTHILL BOULEVARD
AND
NEWPORT AVENUE
SIGNAL MODIFICATION PLAN

MARK	DATE	DESCRIPTION

REVISIONS

PREPARED UNDER SUPERVISION OF Lance M. Nishihara RCE 42679 — 5/19/92 DATE

REGISTERED PROFESSIONAL ENGINEER — LANCE M. NISHIHARA — NO. 42679 — CIVIL — STATE OF CALIFORNIA

DESIGNED L. ABAD
DRAWN T. PHAM
CHECKED L. NATSUHARA

SCALE AS SHOWN
DATE JUNE 92
W.O. NO. R09753
SHEET 5 OF 13

oonewsp.m requested from traf on black_D. Wed May 20 15:37:33 PDT 1992

⊠ INDUCTIVE LOOP DETECTOR SCHEDULE

SENSOR UNIT	CHANNEL	DETECTOR	
# 1	✱ 1 ·	1-01	
	2 (1)	1-02	1
# 2	1 (2)	2-02	2
	2	3-02	3
# 3	1	4-02	4
	2 (5)	1-01	5
# 4	1 (6)	1-06	6
	2	2-06	7
# 5	1	3-06	
	2	SPARE	
# 6	1	1-04	
	2	SPARE	
# 7	1 (7)	1-08	8
	2 (8)	2-08	9
# 8	1	3-08	10
	2	4-08	11
# 9	1	EVP (FUTURE)	
	2		
# 10	1	EVP (FUTURE)	
	2		

⊠ - DETECTOR LOOP LOCATIONS SHALL BE APPROVED BY ENGINEER IN FIELD PRIOR TO INSTALLATION. ALL DETECTOR UNITS SHALL BE RACK MOUNTED, DUAL CHANNEL, DUAL OUTPUT PER CHANNEL WITH INTEGRAL COLORCODED EXTENSION AND DELAY CAPABILITY. OUTPUT 'A' SHALL BE TIMED. OUTPUT 'B' SHALL BE PRESENCE MODE FOR SYSTEM SAMPLING ONLY.

(#) = SYSTEM SAMPLER NUMBER.
[#] = VEHICLE COUNTING SYSTEM CHANNEL NUMBER.
✱ = DELAY (0-30 SEC. MIN.)

YIELD
WHEN TURNING ON GREEN ○
NO U-TURN

BLACK ON WHITE
38" × 28"
6" SERIES D LETTERS (LINE 1)
4" SERIES D LETTERS (LINE 2,3 &4)
○ REFLECTIVE GREEN

DETAIL 1
NOT TO SCALE

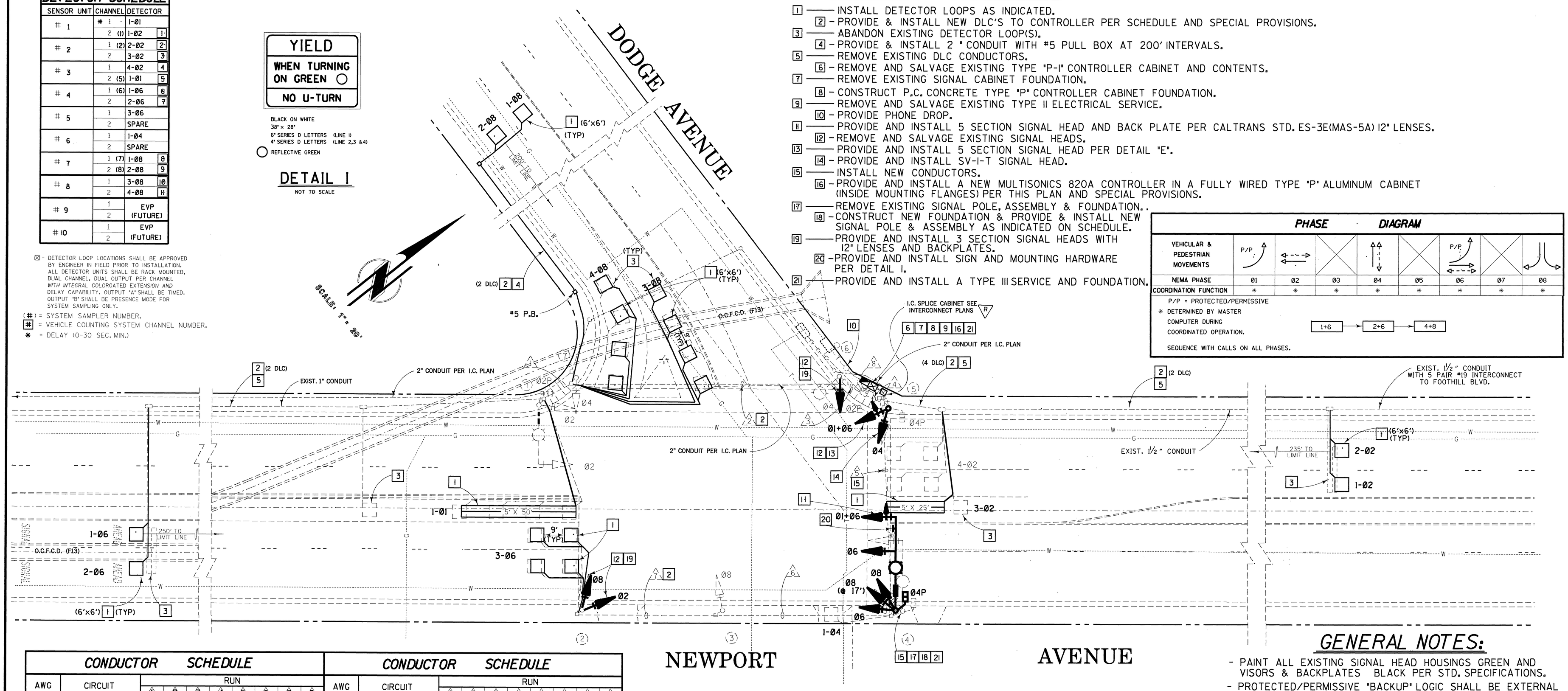
CONSTRUCTION NOTES:

1 —— INSTALL DETECTOR LOOPS AS INDICATED.
2 – PROVIDE & INSTALL NEW DLC'S TO CONTROLLER PER SCHEDULE AND SPECIAL PROVISIONS.
3 —— ABANDON EXISTING DETECTOR LOOP(S).
4 – PROVIDE & INSTALL 2 " CONDUIT WITH #5 PULL BOX AT 200' INTERVALS.
5 —— REMOVE EXISTING DLC CONDUCTORS.
6 – REMOVE AND SALVAGE EXISTING TYPE "P-I" CONTROLLER CABINET AND CONTENTS.
7 —— REMOVE EXISTING SIGNAL CABINET FOUNDATION.
8 – CONSTRUCT P.C. CONCRETE TYPE "P" CONTROLLER CABINET FOUNDATION.
9 —— REMOVE AND SALVAGE EXISTING TYPE II ELECTRICAL SERVICE.
10 – PROVIDE PHONE DROP.
11 —— PROVIDE AND INSTALL 5 SECTION SIGNAL HEAD AND BACK PLATE PER CALTRANS STD. ES-3E(MAS-5A) 12" LENSES.
12 – REMOVE AND SALVAGE EXISTING SIGNAL HEADS.
13 —— PROVIDE AND INSTALL 5 SECTION SIGNAL HEAD PER DETAIL "E".
14 – PROVIDE AND INSTALL SV-I-T SIGNAL HEAD.
15 —— INSTALL NEW CONDUCTORS.
16 – PROVIDE AND INSTALL A NEW MULTISONICS 820A CONTROLLER IN A FULLY WIRED TYPE "P" ALUMINUM CABINET (INSIDE MOUNTING FLANGES) PER THIS PLAN AND SPECIAL PROVISIONS.
17 —— REMOVE EXISTING SIGNAL POLE, ASSEMBLY & FOUNDATION..
18 – CONSTRUCT NEW FOUNDATION & PROVIDE & INSTALL NEW SIGNAL POLE & ASSEMBLY AS INDICATED ON SCHEDULE.
19 —— PROVIDE AND INSTALL 3 SECTION SIGNAL HEADS WITH 12" LENSES AND BACKPLATES.
20 – PROVIDE AND INSTALL SIGN AND MOUNTING HARDWARE PER DETAIL 1.
21 —— PROVIDE AND INSTALL A TYPE III SERVICE AND FOUNDATION.

PHASE DIAGRAM

VEHICULAR & PEDESTRIAN MOVEMENTS	P/P					P/P		
NEMA PHASE	01	02	03	04	05	06	07	08
COORDINATION FUNCTION	✱	✱	✱	✱	✱	✱	✱	✱

P/P = PROTECTED/PERMISSIVE
✱ DETERMINED BY MASTER COMPUTER DURING COORDINATED OPERATION.
SEQUENCE WITH CALLS ON ALL PHASES.
1+6 → 2+6 → 4+8



CONDUCTOR SCHEDULE

AWG	CIRCUIT	RUN 1	2	3	4	5	6	7	8
# 14	Ø1				3	3			3
	Ø2	(3)	(3)	(3)	3	3	3	3	6
	Ø4		(3)	(3)					(3)
	Ø5								
	Ø6				3	3			3
	Ø8				3	3	3	3	3
	Ø2P	(2)	(2)	(2)	(2)				(4)
	Ø4P				(2)	2			(2)
	Ø2PPB	(1)	(1)	(1)					(1)
	Ø4PPB				(1)	(1)			(1)
	Ø8PPB								
	PPB COMMON	(1)	(1)	(1)	(1)	(1)			(2)

CONDUCTOR SCHEDULE

AWG	CIRCUIT	RUN 1	2	3	4	5	6	7	8
# 14	ISNS	(1)	(1)	(1)	(1)	(1)			(2)
	SPARES	(3)	(3)	(3)	(3)	(3)	(3)	(3)	(6)
	TOTAL	(11)	(14)	(14)	22	20	(9)	(9)	36
# 10	SIGNAL COMMON	(1)	(1)	(1)	(1)	(1)	(1)	(1)	(2)
	LUMINAIRE	(2)	(2)	(2)	(2)	(2)			(4)
	TOTAL	(3)	(3)	(3)	(3)	(3)	(1)	(1)	(6)
DLC	Ø1	1	1	1					1
	Ø2				4				4
	Ø4					1	1		1
	Ø6	2	2	2	1	1	1	1	3
	Ø8		4	4					4
	TOTAL	3	7	7	6	2	1	1	13
CONDUIT SIZE		(2")	(2")	(2")	(2½")	(2½")	(1½")	(1½")	(2-3")

(#) = EXISTING
BOLD No. = NEW

POLE SCHEDULE (EXISTING)

	POLE DATA NO.	TYPE	HEIGHT	SIGNAL M.A.	H.P.S.V. LUMINAIRE M.A.	WATTS	SIGNAL MOUNTING VEH.	M.A.	PED.	PED PUSH BUTTON PHASE	POLE QUAD	FOUNDATION TYPE	SIZE	ISNS TYPE "A" (DOUBLE FACE)
	1	19	30'	25'			SV-I-T	MAS	SP-I-T					Dodge Ave.
	2	I-A	10'				TV-2-T (N)							
	3	I-A	10'				TV-1							
18	4	26-4-70 (N)	30'	40' (N)	15'(N)	250	SV-I-T ✱ (N) SV-2-T (N)	MAS-5A(N) MAS (N)	SP-I-T (R)	4	NW (R)	C	3'-0"x8'-0"	Dodge Ave. (R)
	5	I-A	10'				SV-I-T (N) DET. E (N)		SP-2-T	4	NW			
	6	15	28'-6"		15'	250	SV-I-T (N)			2	NE			
	7	I-A	10'				TV-1			2	NE			

EXACT POLE LOCATIONS BY ENGINEER IN THE FIELD. POTHOLE MAST ARM POLE FOUNDATION LOCATIONS PRIOR TO ORDERING POLES.

✱ = MOUNT ● 17'
E = EXISTING.
N = NEW.
R = RELOCATE
C = C.I.D.H.
S = SQUARE.
⊠ = SINGLE FACE.

GENERAL NOTES:

- PAINT ALL EXISTING SIGNAL HEAD HOUSINGS GREEN AND VISORS & BACKPLATES BLACK PER STD. SPECIFICATIONS.
- PROTECTED/PERMISSIVE "BACKUP" LOGIC SHALL BE EXTERNAL TO CONTROLLER.
- SEE SHEET 13 FOR ADDITIONAL NOTES.

½ 0 1 2
3 inches on original drawing

(R) RECORD DRAWING (A.M.)

ORANGE COUNTY ENVIRONMENTAL MANAGEMENT AGENCY

NEWPORT AVENUE AT DODGE AVENUE

SIGNAL MODIFICATION PLAN

MARK	DATE	DESCRIPTION
		REVISIONS

PREPARED UNDER SUPERVISION OF LAKE N. NATSUHARA No. 42579 REGISTERED PROFESSIONAL ENGINEER CIVIL STATE OF CALIFORNIA — RCE 42579 — DATE 5/19/92

DESIGNED L. ABAD
DRAWN T. PHAM
CHECKED L. NATSUHARA

SCALE AS SHOWN | DATE JUNE 92 | W. O. NO. R09753 | SHEET 6 OF 13

DRAWING NUMBER 170.6

dodnewsmp.m requested from traf on black_D. Wed May 20 15:35:04 PDT 1992

POLE SCHEDULE

NO.	POLE DATA TYPE	HEIGHT	SIGNAL M.A.	H.P.S.V. LUMINAIRE M.A.	H.P.S.V. LUMINAIRE WATTS	SIGNAL MOUNTING VEH.	SIGNAL MOUNTING M.A.	SIGNAL MOUNTING PED.	PED PUSH BUTTON PHASE	PED PUSH BUTTON POLE QUAD	FOUNDATION TYPE	FOUNDATION SIZE	ISNS TYPE "A" (DOUBLE FACE)
(1)	1A	10'				TV-1-T (S SECT)		(M) SP-1-CS			S	2'-0"X3'-0"	
(2)	26-4-70	30'	40'	15'	250	SV-1-T	2 MAS	(R) (M) SP-1-CS			C	3'-0"X8'-0"	La Loma
(3)	1A	10'				TV-1-T			2	SE	S	2'-0"X3'-0"	
(4)	TYPE 15	30'		12'	200	SV-1-T		SP-1-CS	2	SE	C	2'-6"X5'-0"	
(5)	1A	10'				TV-1-T		SP-1-CS	8	NW	S	2'-0"X3'-0"	
(6)	26-4-70	30'	40'	15'	250	SV-1-T	2 MAS	SP-1-CS	8	SW	S	3'-0"X8'-0"	La Loma
(7)	1A	10'				TV-1-T		SP-1-CS	6	NW	S	2'-0"X3'-0"	
(8)	TYPE 15	30'		12'	200	SV-1-T			6	NW	C	2'-6"X5'-0"	

EXACT POLE LOCATIONS BY ENGINEER IN THE FIELD.
POTHOLE MAST ARM POLE FOUNDATION LOCATIONS PRIOR TO ORDERING POLES.

C = C.I.D.H.
S = SQUARE.

PHASE DIAGRAM

VEHICULAR & PEDESTRIAN MOVEMENTS								
NEMA PHASE	Ø1	Ø2	Ø3	Ø4	Ø5	Ø6	Ø7	Ø8
COORDINATION FUNCTION	*	*	*	*	*	*	*	*

* DETERMINED BY MASTER COMPUTER DURING COORDINATED OPERATION.

1+5 → 2+6 → 4+8

SEQUENCE WITH CALLS ON ALL PHASES.

(NEW)

☒ INDUCTIVE LOOP DETECTOR SCHEDULE

SENSOR UNIT	CHANNEL	DETECTOR
# 1	1 [1]	1-Ø5 (1)
	2 [2]	1-Ø2 (2)
# 2	1 [3]	2-Ø2 (3)
	2	3-Ø2
# 3	1 [4]	1-Ø1 (4)
	2 [5]	1-Ø6 (5)
# 4	1 [6]	2-Ø6 (6)
	2	3-Ø6
# 5	* 1 [7]	1-Ø4
	2	SPARE
# 6	1 [8]	1-Ø8
	* 2 [9]	2-Ø8

☒ - DETECTOR LOOP LOCATIONS SHALL BE APPROVED BY ENGINEER IN FIELD PRIOR TO INSTALLATION. ALL DETECTOR UNITS SHALL BE SHELF MOUNTED, DUAL CHANNEL, DUAL OUTPUT PER CHANNEL WITH INTEGRAL COLORGATED EXTENSION AND DELAY CAPABILITY. OUTPUT "A" SHALL BE TIMED. OUTPUT "B" SHALL BE PRESENCE MODE FOR SYSTEM SAMPLING ONLY. NO EXTENSIONS ON RED

(#) -SYSTEM SAMPLER NUMBER
[#] -VEHICLE COUNTING SYSTEM NUMBER
* -10-30 SEC DELAY

(EXISTING)

INDUCTIVE LOOP DETECTOR SCHEDULE

SENSOR UNIT	CHANNEL	DETECTOR
# 1	1	1EØ6 ▲
	2	1EØ6 ☒
# 2	1	1WØ2 ▲
	2	1WØ2 ☒
# 3	1	
	2	
	3	4WØ2
	4	1SØ8
# 4	1	1NØ4
	2	
	3	
	4	4EØ6

▲ = CALL HOLD CAPABILITY (Ø-7 SEC)
☒ = SYSTEM SAMPLING

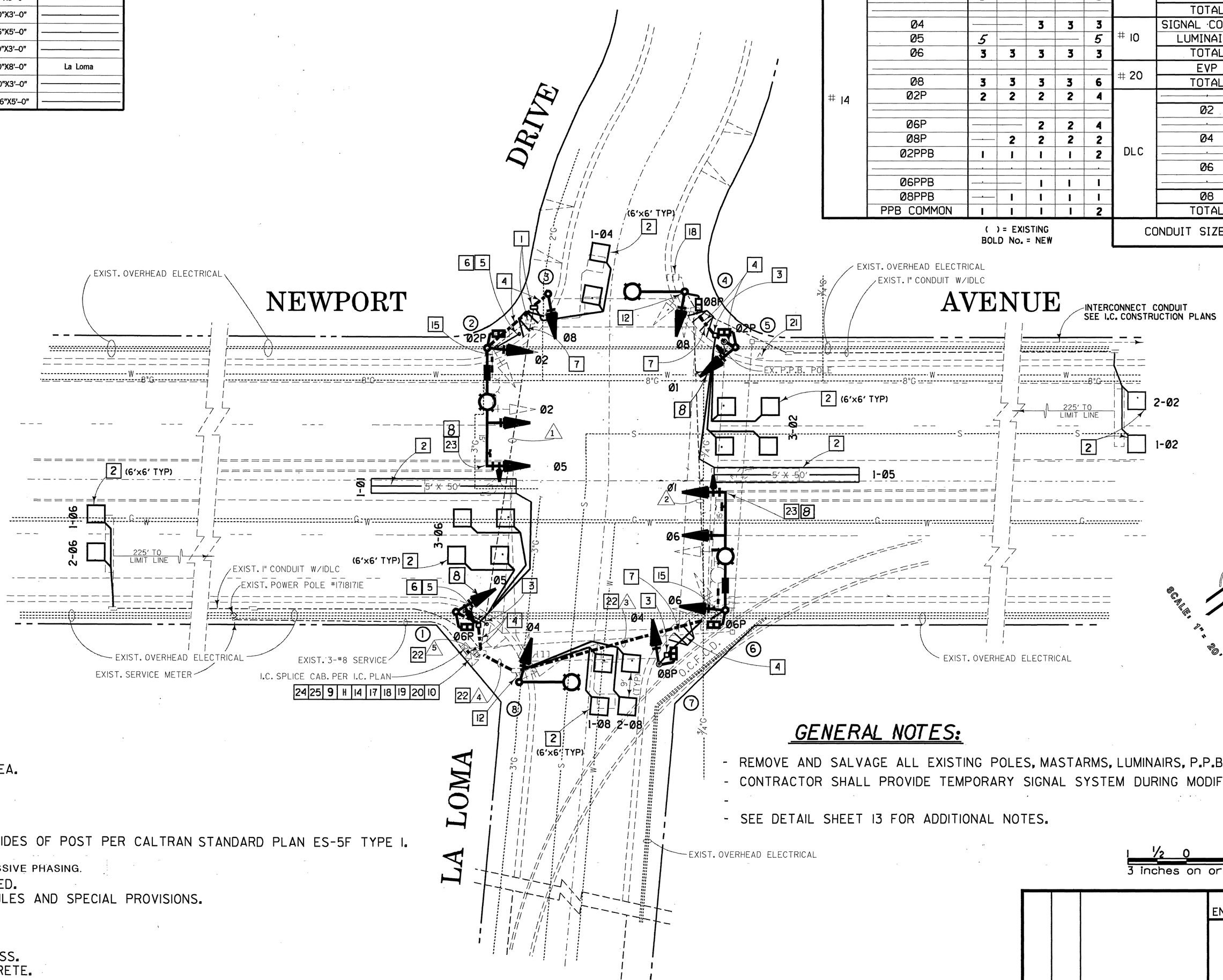
[10] CONDUCTOR SCHEDULE

AWG	CIRCUIT	RUN 1	2	3	4	5
# 14	Ø1	—	3	3	3	3
	Ø2	3	—	—	—	3
	Ø4	—	—	3	3	3
	Ø5	5	—	—	—	5
	Ø6	3	3	3	3	3
	Ø8	3	3	3	3	6
	Ø2P	2	2	2	2	4
	Ø6P	—	—	2	2	4
	Ø8P	—	2	2	2	2
	Ø2PPB	1	1	1	1	2
	Ø6PPB	—	—	1	1	1
	Ø8PPB	—	1	1	1	1
	PPB COMMON	1	1	1	1	2

( ) = EXISTING
BOLD No. = NEW

CONDUCTOR SCHEDULE

AWG	CIRCUIT	RUN 1	2	3	4	5
# 14	ISNS	2	2	2	2	4
	SPARES	3	3	3	3	6
	TOTAL	23	21	27	27	49
# 10	SIGNAL COMMON	1	1	1	1	2
	LUMINAIRE	2	2	2	2	4
	TOTAL	3	3	3	3	6
# 20	EVP	1	—	1	1	2
	TOTAL	1	—	1	1	2
DLC	02	—	4	4	4	4
	04	1	—	—	—	1
	06	—	—	—	—	4
	08	—	—	—	2	2
	TOTAL	1	4	4	6	11
CONDUIT SIZE		(2")	(2")	(2") 3"	(2") 3"	(2-2") 2-3"



CONSTRUCTION NOTES:

[1] —— RELOCATE EXISTING SIGNAL PULL BOX OUT OF WHEEL CHAIR RAMP AREA.
[2] - INSTALL DETECTOR LOOPS AS INDICATED.
[3] —— INSTALL #3½P.B.
[4] - INSTALL 2" CONDUIT.
[5] —— REMOVE EXISTING PEDESTRIAN BARRICADES.
[6] - PROVIDE AND INSTALL PEDESTRIAN BARRICADES AND SIGNS ON BOTH SIDES OF POST PER CALTRAN STANDARD PLAN ES-5F TYPE I.
[7] —— CONSTRUCT WHEEL CHAIR RAMP PER OCEMA STD. PLAN 102-0-0C.
[8] - PROVIDE AND INSTALL 2 ADDITIONAL CONDUCTORS FOR FUTURE PROTECTED/PERMISSIVE PHASING.
[9] —— REWIRE CONTROLLER CABINET FOR DETECTION AND OPERATION INDICATED.
[10] - REMOVE EXISTING CONDUCTORS AND REWIRE INTERSECTION PER SCHEDULES AND SPECIAL PROVISIONS.
[11] —— PROVIDE AND INSTALL VEHICLE COUNTING SYSTEM.
[12] - REMOVE EXISTING SIGNAL FOUNDATION.
[13] ——
[14] - REMOVE AND SALVAGE EXISTING SHELF MOUNT DETECTORS AND HARNESS.
[15] —— REMOVE TOP 18" OF EXISTING SIGNAL FOUNDATION AND CAP WITH CONCRETE.
[16] -
[17] —— PROVIDE AND INSTALL 2 CHANNEL SHELF MOUNT VEHICLE COUNTING DETECTOR AMPLIFIERS WITH EXTEND AND DELAY CAPABILITIES AND NEW HARNESS PER DETECTOR SCHEDULE AND SPECIAL PROVISIONS.
[18] - REMOVE AND SALVAGE EXISTING 820 CONTROLLER.
[19] —— PROVIDE AND INSTALL VCS PANEL WITH VCS HARNESS (MULTISONICS PART No. 016050 OR EQUAL).
[20] - PROVIDE AND INSTALL A NEW MULTISONICS 820A CONTROLLER FOR OPERATION INDICATED.
[21] —— REMOVE EXISTING STREET NAME SIGN AND POST.
[22] - INSTALL 3" CONDUIT PER SCHEDULE.
[23] —— INSTALL EVP CABLE FROM END OF MASTARM TO CABINET AND COIL 15 FEET OF LEAD CABLE IN SIDE CABINET.
[24] - REMOVE EXISTING AND CONSTRUCT NEW P.C. CONCRETE CONTROLLER CABINET FOUNDATION FOR EXISTING TYPE "P" CABINET AND SCHEDULE.
[25] —— RELOCATE EXISTING CABINET AND ASSEMBLY ONTO NEW FOUNDATION.

GENERAL NOTES:

- REMOVE AND SALVAGE ALL EXISTING POLES, MASTARMS, LUMINAIRS, P.P.B.P.'S AND SIGNAL HEADS.
- CONTRACTOR SHALL PROVIDE TEMPORARY SIGNAL SYSTEM DURING MODIFICATION.
-
- SEE DETAIL SHEET 13 FOR ADDITIONAL NOTES.

½ 0 1 2
3 inches on original drawing

ORANGE COUNTY ENVIRONMENTAL MANAGEMENT AGENCY

NEWPORT AVENUE
AT
LA LOMA DRIVE
SIGNAL MODIFICATION PLAN

MARK	DATE	DESCRIPTION
REVISIONS		

DESIGNED L. ABAD
DRAWN T. PHAM CHECKED L. NATSUHARA

PREPARED UNDER SUPERVISION OF [illegible] RCE 10678 DATE 5/19/92

SCALE AS SHOWN | DATE JUNE 92 | W. O. NO. R09753 | SHEET 7 OF 13

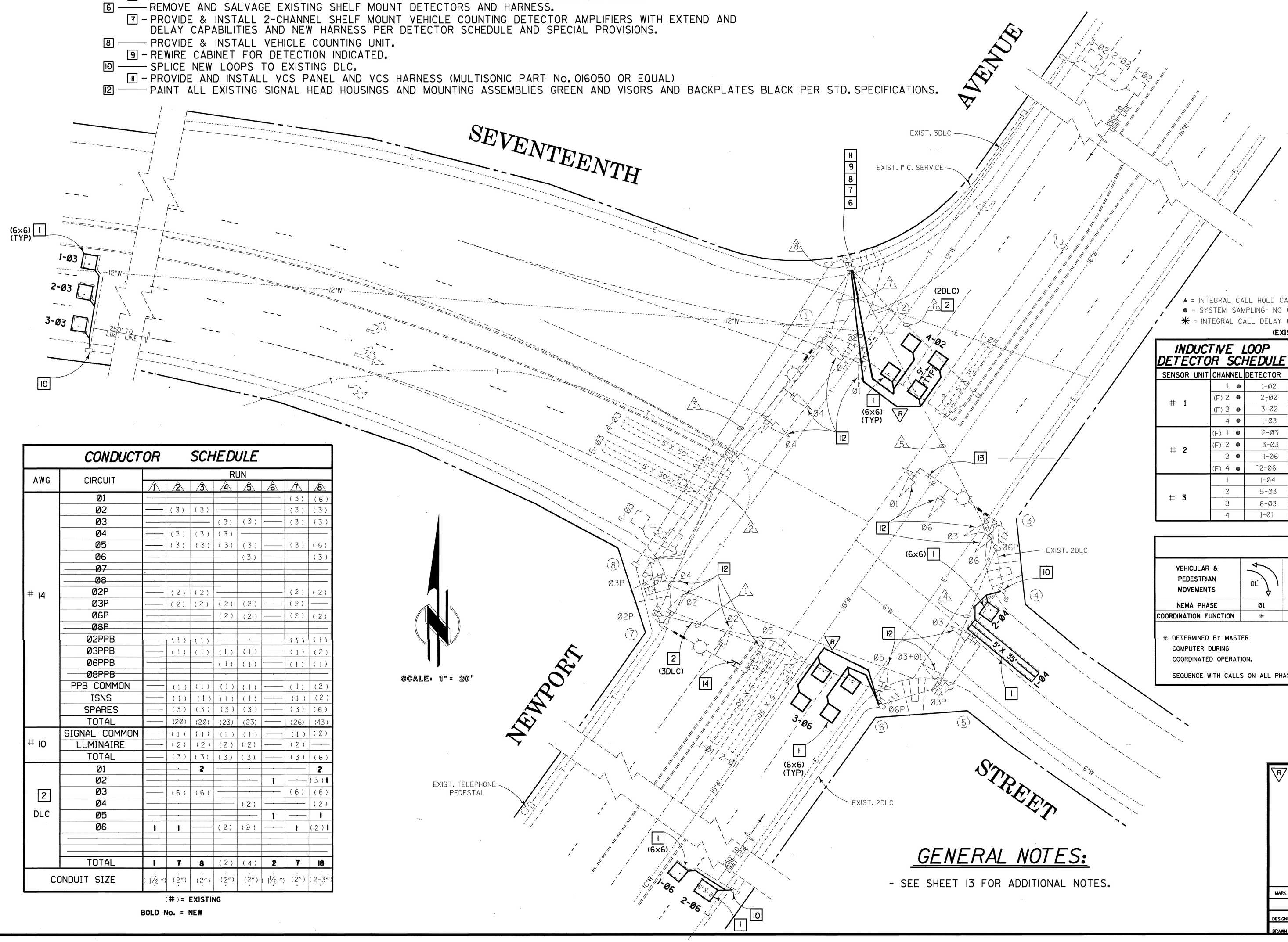
DRAWING NUMBER 170.7

newlomsmp.m requested from traf on black_D. Wed May 20 15:42:24 PDT 1992

DRAWING NUMBER 170.8

CONSTRUCTION NOTES:

1 —— INSTALL DETECTOR LOOPS AS INDICATED.
2 – PROVIDE & INSTALL NEW DLC'S TO CONTROLLER PER SCHEDULE AND SPECIAL PROVISIONS.
6 —— REMOVE AND SALVAGE EXISTING SHELF MOUNT DETECTORS AND HARNESS.
7 – PROVIDE & INSTALL 2-CHANNEL SHELF MOUNT VEHICLE COUNTING DETECTOR AMPLIFIERS WITH EXTEND AND DELAY CAPABILITIES AND NEW HARNESS PER DETECTOR SCHEDULE AND SPECIAL PROVISIONS.
8 —— PROVIDE & INSTALL VEHICLE COUNTING UNIT.
9 – REWIRE CABINET FOR DETECTION INDICATED.
10 —— SPLICE NEW LOOPS TO EXISTING DLC.
11 – PROVIDE AND INSTALL VCS PANEL AND VCS HARNESS (MULTISONIC PART No. 016050 OR EQUAL)
12 —— PAINT ALL EXISTING SIGNAL HEAD HOUSINGS AND MOUNTING ASSEMBLIES GREEN AND VISORS AND BACKPLATES BLACK PER STD. SPECIFICATIONS.
13 – REMOVE EXISTING SIGN AND INSTALL R73-6 SIGN WITH NEW MOUNTING HARDWARE.
14 —— PROVIDE AND INSTALL R73-3 SIGN AND MOUNTING HARDWARE.



CONDUCTOR SCHEDULE

AWG	CIRCUIT	RUN 1	2	3	4	5	6	7	8
#14	Ø1							(3)	(6)
	Ø2		(3)	(3)				(3)	(3)
	Ø3				(3)	(3)		(3)	(3)
	Ø4		(3)	(3)	(3)				
	Ø5		(3)	(3)	(3)	(3)		(3)	(6)
	Ø6					(3)			(3)
	Ø7								
	Ø8								
	Ø2P		(2)	(2)				(2)	(2)
	Ø3P		(2)	(2)	(2)	(2)		(2)	
	Ø6P				(2)	(2)		(2)	(2)
	Ø8P								
	Ø2PPB		(1)	(1)				(1)	(1)
	Ø3PPB		(1)	(1)	(1)	(1)		(1)	(2)
	Ø6PPB				(1)	(1)		(1)	(1)
	Ø8PPB								
	PPB COMMON		(1)	(1)	(1)	(1)		(1)	(2)
	ISNS		(1)	(1)	(1)	(1)		(1)	(2)
	SPARES		(3)	(3)	(3)	(3)		(3)	(6)
	TOTAL		(20)	(20)	(23)	(23)		(26)	(43)
#10	SIGNAL COMMON		(1)	(1)	(1)	(1)		(1)	(2)
	LUMINAIRE		(2)	(2)	(2)	(2)		(2)	
	TOTAL		(3)	(3)	(3)	(3)		(3)	(6)
2 DLC	Ø1			**2**					**2**
	Ø2						**1**		(3) **1**
	Ø3		(6)	(6)				(6)	(6)
	Ø4					(2)			(2)
	Ø5						**1**		**1**
	Ø6	**1**	**1**		(2)	(2)		**1**	(2) **1**
	TOTAL	**1**	**7**	**8**	(2)	(4)	**2**	**7**	**18**
CONDUIT SIZE		(1½")	(2")	(2")	(2")	(2")	(1½")	(2")	(2-3")

(#) = EXISTING
BOLD No. = NEW

7 (NEW)

⊠ INDUCTIVE LOOP DETECTOR SCHEDULE

SENSOR UNIT	CHANNEL	DETECTOR
# 1	1 1	1-Ø5
	2 2	1-Ø2 (1)
# 2	1 3	2-Ø2 (2)
	2 4	3-Ø2 (3)
# 3	1	4-Ø2
	2 5	1-Ø1
# 4	1 6	2-Ø1
	2 7	1-Ø6 (4)
# 5	1 8	2-Ø6 (5)
	2	3-Ø6
# 6	1 9	1-Ø4
	2 10	2-Ø4
# 7	1 11	1-Ø3 (6)
	2 12	2-Ø3 (7)
# 8	1 13	3-Ø3 (8)
	2 14	4-Ø3
# 9	1 15	5-Ø3
	2 16	6-Ø3

⊠ – DETECTOR LOOP LOCATIONS SHALL BE APPROVED BY ENGINEER IN FIELD PRIOR TO INSTALLATION. ALL DETECTOR UNITS SHALL BE SHELF MOUNTED. DUAL CHANNEL, DUAL OUTPUT PER CHANNEL WITH INTEGRAL COLORGATED EXTENSION AND DELAY CAPABILITY. OUTPUT "A" SHALL BE TIMED. OUTPUT "B" SHALL BE PRESENCE MODE FOR SYSTEM SAMPLING ONLY.
(*) = SYSTEM SAMPLER NUMBER.
■ = VEHICLE COUNTING SYSTEM CHANNEL NUMBER.

▲ = INTEGRAL CALL HOLD CAPABILITY (0-5 SEC. MIN.)
● = SYSTEM SAMPLING- NO OUTPUT TO PHASE.
✳ = INTEGRAL CALL DELAY CAPABILITY (0-30 SEC. MIN.)

(EXISTING)

INDUCTIVE LOOP DETECTOR SCHEDULE

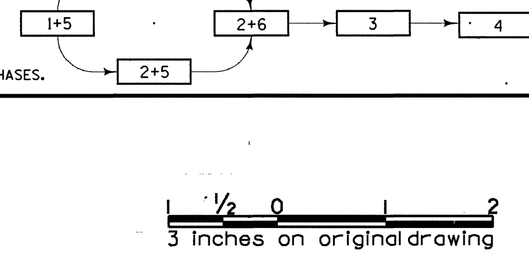
SENSOR UNIT	CHANNEL	DETECTOR
# 1	1 ●	1-Ø2
	(F) 2 ●	2-Ø2
	(F) 3 ●	3-Ø2
	4 ●	1-Ø3
# 2	(F) 1 ●	2-Ø3
	(F) 2 ●	3-Ø3
	3 ●	1-Ø6
	(F) 4 ●	2-Ø6
# 3	1	1-Ø4
	2	5-Ø3
	3	6-Ø3
	4	1-Ø1

SENSOR UNIT	CHANNEL	DETECTOR
# 4	1	4-Ø3
	2	SPARE
	3	2-Ø1
	4	1-Ø5
# 5	1 ▲	1-Ø2
	(F) 2 ▲	2-Ø2
# 6	(F) 1 ▲	3-Ø2
	2 ▲	1-Ø3
# 7	(F) 1 ▲	2-Ø3
	(F) 2 ▲	3-Ø3
# 8	1 ▲	1-Ø6
	(F) 2 ▲	2-Ø6
# 9	1 ✳	2-Ø4
	2	SPARE

PHASE DIAGRAM

VEHICULAR & PEDESTRIAN MOVEMENTS	OL							
NEMA PHASE	Ø1	Ø2	Ø3	Ø4	Ø5	Ø6	Ø7	Ø8
COORDINATION FUNCTION	*	*	*	*	*	*	*	*

* DETERMINED BY MASTER COMPUTER DURING COORDINATED OPERATION.
SEQUENCE WITH CALLS ON ALL PHASES.



½ 0 1 2
3 inches on original drawing

GENERAL NOTES:

- SEE SHEET 13 FOR ADDITIONAL NOTES.

R RECORD DRAWING (A.M)

ORANGE COUNTY ENVIRONMENTAL MANAGEMENT AGENCY

NEWPORT AVENUE
AT
SEVENTEENTH STREET
SIGNAL MODIFICATION PLAN

MARK	DATE	DESCRIPTION
		REVISIONS

DESIGNED L. ABAD
DRAWN T. PHAM CHECKED L. NATSUHARA

PREPARED UNDER SUPERVISION OF [illegible] RCE 42 DATE 5/21/92
REGISTERED PROFESSIONAL ENGINEER LAURA V. NATSUHARA No. 53196 STATE OF CALIFORNIA

SCALE AS SHOWN | DATE JUNE 92 | W. O. NO. R09753 | SHEET 8 OF 13

newsevsmp.m requested from traf on black_D. Wed May 20 15:44:57 PDT 1992

POLE SCHEDULE

	NO.	POLE DATA TYPE	POLE DATA HEIGHT	SIGNAL M.A.	H.P.S.V. LUMINAIRE M.A.	H.P.S.V. LUMINAIRE WATTS	SIGNAL MOUNTING VEH.	SIGNAL MOUNTING M.A.	SIGNAL MOUNTING PED.	PED PUSH BUTTON PHASE	PED PUSH BUTTON POLE QUAD	FOUNDATION TYPE	FOUNDATION SIZE	ISNS TYPE 'A' (DOUBLE FACE)
	①	1-A (E)	(E) 10'				(N) TV-1		SP-1-T(E)					
9	②	15 (E)			(E) 15'	(E) 250	(N)SV-1-T			6	NW (E)			
	③	1-A (E)	(E) 10'				(E) TV-1		SP-1-T(E)	6	NW (E)			
	④	19 (E)	(E) 30'	(E) 25'	(E) 15'	(E) 250	(E) SV-1-T	(E) MAS	SP-1-T(E)	8	SW (E)			(E) La Colina Dr.
9	⑤	17 (E)	(E) 28'-6"	(E) 18'	(E) 15'	(E) 250	(N)SV-1-T	(E) MAS	SP-1-T(E)	8	NE (E)			(E) Newport Ave.
14	⑥	26-4-70 (N)	(N) 30'	(N) 45'	(N) 15'	(N) 250	(R) SV-2-T	MAS (N) MAS (N)				(N) C	(N)3'-0"x8'-0"	(R) La Colina Dr.

EXACT POLE LOCATIONS BY ENGINEER IN THE FIELD. POTHOLE MAST ARM POLE FOUNDATION LOCATIONS PRIOR TO ORDERING POLES.

(R) = RELOCATE
(E) = EXISTING.
(N) = NEW.
* = TURN LUMINAIRE M.A. 90°

C = C.I.D.H.
S = SQUARE.

⊠ = SINGLE FACE.

⊠ - DETECTOR LOOP LOCATIONS SHALL BE APPROVED BY ENGINEER IN FIELD PRIOR TO INSTALLATION. ALL DETECTOR UNITS SHALL BE RACK MOUNTED, DUAL CHANNEL, DUAL OUTPUT PER CHANNEL WITH INTEGRAL COLORGATED EXTENSION AND DELAY CAPABILITY. OUTPUT "A" SHALL BE TIMED. OUTPUT "B" SHALL BE PRESENCE MODE FOR SYSTEM SAMPLING ONLY.

(#) = SYSTEM SAMPLER NUMBER.

[#] = VEHICLE COUNTING SYSTEM NUMBER.

* = 0-60 SEC. DELAY

⊠ INDUCTIVE LOOP DETECTOR SCHEDULE

SENSOR UNIT	CHANNEL		DETECTOR
# 1	1	*	1-05
	2		1-02 (1)
# 2	3		2-02 (2)
	2		3-02
# 3	1		SPARE
	4		1-06 (5)
# 4	5		2-06 (6)
	2		3-06
# 5	1		SPARE
	6	*	1-04
# 6	7		1-08 (7)
	8	*	2-08 (8)

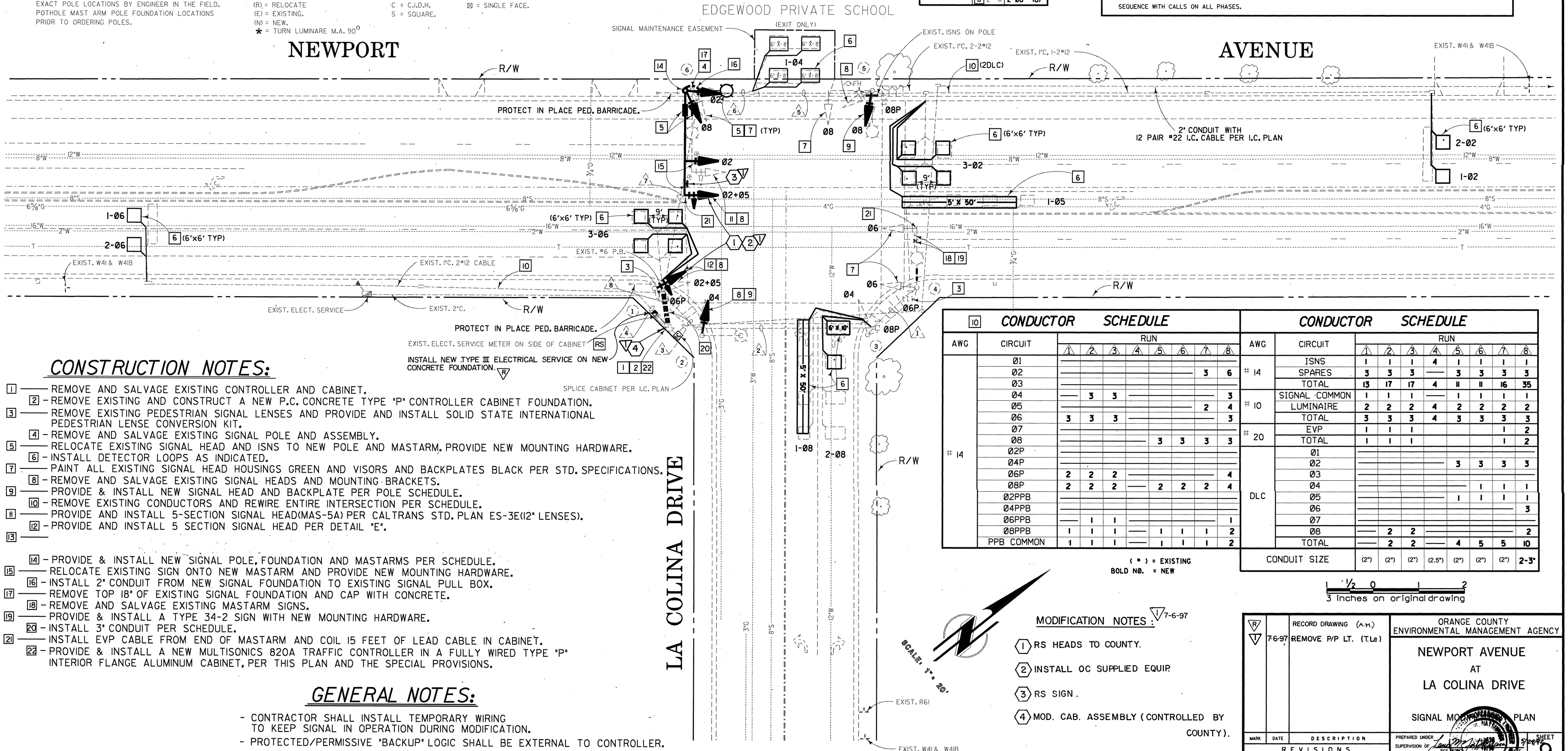
PHASE DIAGRAM

VEHICULAR & PEDESTRIAN MOVEMENTS								
NEMA PHASE	01	02	03	04	05	06	07	08
COORDINATION FUNCTION	*	*	*	*	*	*	*	*

P/P = PROTECTED/PERMISSIVE
* DETERMINED BY MASTER COMPUTER DURING COORDINATED OPERATION.

2+5 → 2+6 → 4+8

SEQUENCE WITH CALLS ON ALL PHASES.



CONSTRUCTION NOTES:

1 —— REMOVE AND SALVAGE EXISTING CONTROLLER AND CABINET.
2 – REMOVE EXISTING AND CONSTRUCT A NEW P.C. CONCRETE TYPE "P" CONTROLLER CABINET FOUNDATION.
3 —— REMOVE EXISTING PEDESTRIAN SIGNAL LENSES AND PROVIDE AND INSTALL SOLID STATE INTERNATIONAL PEDESTRIAN LENSE CONVERSION KIT.
4 – REMOVE AND SALVAGE EXISTING SIGNAL POLE AND ASSEMBLY.
5 —— RELOCATE EXISTING SIGNAL HEAD AND ISNS TO NEW POLE AND MASTARM. PROVIDE NEW MOUNTING HARDWARE.
6 – INSTALL DETECTOR LOOPS AS INDICATED.
7 —— PAINT ALL EXISTING SIGNAL HEAD HOUSINGS GREEN AND VISORS AND BACKPLATES BLACK PER STD. SPECIFICATIONS.
8 – REMOVE AND SALVAGE EXISTING SIGNAL HEADS AND MOUNTING BRACKETS.
9 —— PROVIDE & INSTALL NEW SIGNAL HEAD AND BACKPLATE PER POLE SCHEDULE.
10 – REMOVE EXISTING CONDUCTORS AND REWIRE ENTIRE INTERSECTION PER SCHEDULE.
11 —— PROVIDE AND INSTALL 5-SECTION SIGNAL HEAD(MAS-5A) PER CALTRANS STD. PLAN ES-3E(12" LENSES).
12 – PROVIDE AND INSTALL 5 SECTION SIGNAL HEAD PER DETAIL "E".
13 ——

14 – PROVIDE & INSTALL NEW SIGNAL POLE, FOUNDATION AND MASTARMS PER SCHEDULE.
15 —— RELOCATE EXISTING SIGN ONTO NEW MASTARM AND PROVIDE NEW MOUNTING HARDWARE.
16 – INSTALL 2" CONDUIT FROM NEW SIGNAL FOUNDATION TO EXISTING SIGNAL PULL BOX.
17 —— REMOVE TOP 18" OF EXISTING SIGNAL FOUNDATION AND CAP WITH CONCRETE.
18 – REMOVE AND SALVAGE EXISTING MASTARM SIGNS.
19 —— PROVIDE & INSTALL A TYPE 34-2 SIGN WITH NEW MOUNTING HARDWARE.
20 – INSTALL 3" CONDUIT PER SCHEDULE.
21 —— INSTALL EVP CABLE FROM END OF MASTARM AND COIL 15 FEET OF LEAD CABLE IN CABINET.
22 – PROVIDE & INSTALL A NEW MULTISONICS 820A TRAFFIC CONTROLLER IN A FULLY WIRED TYPE "P" INTERIOR FLANGE ALUMINUM CABINET, PER THIS PLAN AND THE SPECIAL PROVISIONS.

GENERAL NOTES:

- CONTRACTOR SHALL INSTALL TEMPORARY WIRING TO KEEP SIGNAL IN OPERATION DURING MODIFICATION.
- PROTECTED/PERMISSIVE "BACKUP" LOGIC SHALL BE EXTERNAL TO CONTROLLER.
- SEE DETAIL SHEET 13 FOR ADDITIONAL NOTES.

[10] CONDUCTOR SCHEDULE

AWG	CIRCUIT	RUN ①	②	③	④	⑤	⑥	⑦	⑧
# 14	Ø1								
	Ø2							3	6
	Ø3								
	Ø4	—	3	3	—				3
	Ø5							2	4
	Ø6	3	3	3	—				3
	Ø7								
	Ø8					3	3	3	3
	Ø2P								
	Ø4P								
	Ø6P	2	2	2	—				4
	Ø8P	2	2	2	—	2	2	2	4
	Ø2PPB								
	Ø4PPB								
	Ø6PPB	—	1	1					1
	Ø8PPB	1	1	1	—	1	1	1	2
	PPB COMMON	1	1	1	—	1	1	1	2

CONDUCTOR SCHEDULE

AWG	CIRCUIT	RUN ①	②	③	④	⑤	⑥	⑦	⑧
# 14	ISNS	1	1	1	4	1	1	1	1
	SPARES	3	3	3	—	3	3	3	3
	TOTAL	13	17	17	4	11	11	16	35
# 10	SIGNAL COMMON	1	1	1	—	1	1	1	1
	LUMINAIRE	2	2	2	4	2	2	2	2
	TOTAL	3	3	3	4	3	3	3	3
# 20	EVP	1	1	1				1	2
	TOTAL	1	1	1				1	2
DLC	Ø1								
	Ø2					3	3	3	3
	Ø3								
	Ø4						1	1	1
	Ø5					1	1	1	1
	Ø6								3
	Ø7								
	Ø8	—	2	2	—				2
	TOTAL	—	2	2	—	4	5	5	10
CONDUIT SIZE		(2")	(2")	(2")	(2.5")	(2")	(2")	(2")	2-3"

(") = EXISTING
BOLD NØ. = NEW

½ 0 1 2
3 Inches on original drawing

MODIFICATION NOTES: ⟨1⟩ 7-6-97

⟨1⟩ RS HEADS TO COUNTY.
⟨2⟩ INSTALL OC SUPPLIED EQUIP.
⟨3⟩ RS SIGN.
⟨4⟩ MOD. CAB. ASSEMBLY (CONTROLLED BY COUNTY).

MARK	DATE	DESCRIPTION
R		RECORD DRAWING (A.M.)
⟨1⟩	7-6-97	REMOVE P/P LT. (T.Le)

REVISIONS

DESIGNED L. ABAD
DRAWN T. PHAM CHECKED L. NATSUHARA

ORANGE COUNTY ENVIRONMENTAL MANAGEMENT AGENCY

NEWPORT AVENUE AT LA COLINA DRIVE

SIGNAL MODIFICATION PLAN

PREPARED UNDER SUPERVISION OF Paul Litchfield RCE 15675 EXP. 6-30-93

SCALE AS SHOWN | DATE JUNE 92 | SHEET 9 OF 13

4 PHASE DIAGRAM

DRAWING NUMBER 170.9

ENGINEER

DRAWING NUMBER

newolsmp.m requested from traf on black_D. Wed May 20 15:39:53 PDT 1992

DRAWING NUMBER
SEVENTH ST @ AVE
N · BAKERSFIELD
CA
170.10
DRAWING NUMBER
DRAWING NUMBER

CONDUCTOR SCHEDULE

AWG	CIRCUIT	RUN 1	2	3	4	5
# 14	Ø1	(3)	(3)	(3)	——	(6)
	Ø2	——	(3)	——	(3)	(6)
	Ø4	(3)	(3)	——	——	(3)
	Ø6	(3)	(3)	**3**	——	(3) **6**
	Ø2P	——	——	(2)	(2)	(4)
	Ø4P	(2)	(2)	(2)	——	(6)
	Ø2PPB	——	——	(1)	——	(2)
	Ø4PPB	(1)	(1)	(1)	——	(2)
	PPB COMMON	(1)	(1)	(1)	(1)	(2)

CONDUCTOR SCHEDULE

AWG	CIRCUIT	RUN 1	2	3	4	5
# 14	ISNS	(2)	(2)	——	(2)	(4)
	SPARES	(3)	(3)	(3)	(3)	(9)
	TOTAL	(18)	(21)	(13)	(11)	(47) **50**
# 10	SIGNAL COMMON	(1)	(1)	(1)	(1)	(3)
	LUMINAIRE	(2)	(2)	——	(2)	(4)
	TOTAL	(3)	3	(1)	(3)	(7)
DLC	Ø1	——	(1)	——	——	(1)
	Ø2	——	——	(2) **3**	——	(2) **3**
	Ø4	——	——	——	——	(2)
	Ø6	——	(2) **3**	——	——	(2) **3**
	TOTAL	——	(3) **4**	(2) **3**	——	(5) **9**
CONDUIT SIZE		(2")	(2")	(2")	(2")	(2-3")

(##) = EXISTING
BOLD NUMBERS = NEW

EXISTING

INDUCTIVE LOOP DETECTOR SCHEDULE

SENSOR UNIT	CHANNEL	DETECTOR
# 1	1 ●	1-02
	2 ●	2-02(F)
	3 ●	1-06
	4 ●	2-06(F)
# 2	1	1-01
	2	1-04
	3	SPARE
	4	SPARE
# 3	1 ▲	1-02
	2 ▲	2-02(F)
# 4	1 ▲	1-06
	2 ▲	2-06(F)
# 5	1 ✱	2-04
	2	SPARE

● = SYSTEM SAMPLING - NO INPUT TO PHASE.
▲ = INTEGRAL CALL HOLD CAPABILITY (0-5 SEC. MIN.)
✱ = INTEGRAL CALL DELAY CAPABILITY (0-30 SEC. MIN.)
F = FUTURE

NEW

INDUCTIVE LOOP DETECTOR SCHEDULE

SENSOR UNIT	CHANNEL		DETECTOR
# 1	1	1	1-02 (1)
	2	2	2-02 (2)
# 2	1		3-02
	2		SPARE
# 3	1	3	1-01 (3)
	2	4	1-06 (4)
# 4	1	5	2-06 (5)
	2		3-06
# 5	1	6	1-04 (6)
	✱ 2	7	2-04 (7)

✱ = INTEGRAL CALL DELAY CAPABILITY (0-30 SEC. MIN.)
(*) = SYSTEM SAMPLER NUMBER.
[*] = VEHICLE COUNTING SYSTEM NUMBER.

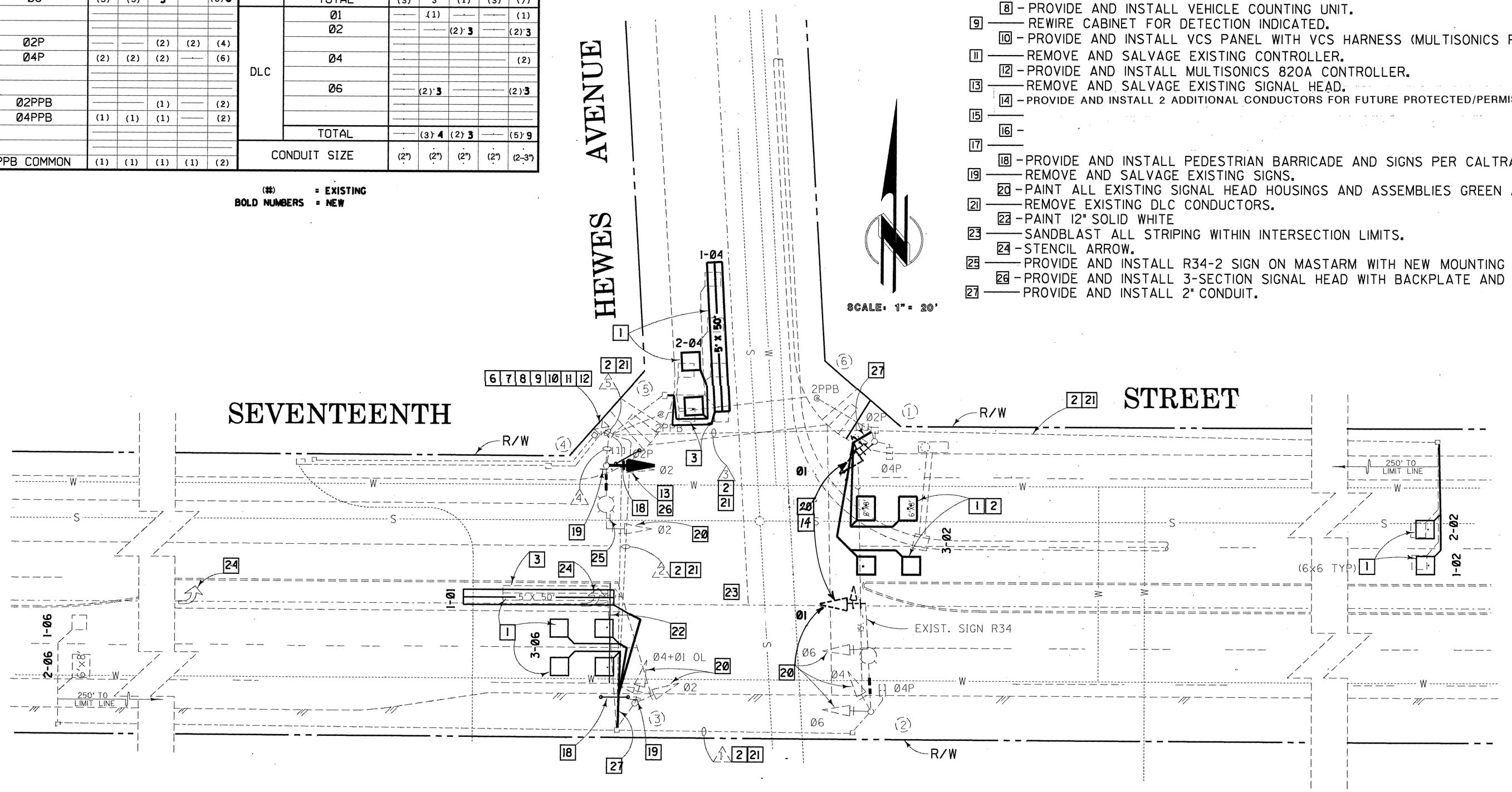
PHASE DIAGRAM

VEHICULAR & PEDESTRIAN MOVEMENTS	OL							
NEMA PHASE	Ø1	Ø2	Ø3	Ø4	Ø5	Ø6	Ø7	Ø8
COORDINATION FUNCTION	✱	✱	✱	✱	✱	✱	✱	✱

✱ DETERMINED BY MASTER COMPUTER DURING COORDINATED OPERATION.

1+6 → 2+6 → 4

SEQUENCE WITH CALLS ON ALL PHASES.



CONSTRUCTION NOTES:

1 —— INSTALL DETECTOR LOOPS AS INDICATED.
2 – PROVIDE AND INSTALL NEW DLC'S TO CONTROLLER.
3 —— ABANDON EXISTING LOOPS.
6 – REMOVE AND SALVAGE EXISTING SHELF MOUNT DETECTORS AND HARNESS.
7 —— PROVIDE AND INSTALL 2 CHANNEL SHELF MOUNT VEHICLE COUNTING DETECTOR AMPLIFIERS WITH EXTEND AND DELAY CAPABILITIES AND NEW HARNESS PER DETECTOR SCHEDULE.
8 – PROVIDE AND INSTALL VEHICLE COUNTING UNIT.
9 —— REWIRE CABINET FOR DETECTION INDICATED.
10 – PROVIDE AND INSTALL VCS PANEL WITH VCS HARNESS (MULTISONICS PART No. 016050 OR EQUAL).
11 —— REMOVE AND SALVAGE EXISTING CONTROLLER.
12 – PROVIDE AND INSTALL MULTISONICS 820A CONTROLLER.
13 —— REMOVE AND SALVAGE EXISTING SIGNAL HEAD.
14 – PROVIDE AND INSTALL 2 ADDITIONAL CONDUCTORS FOR FUTURE PROTECTED/PERMISSIVE PHASING.
15 ——
16 –
17 ——
18 – PROVIDE AND INSTALL PEDESTRIAN BARRICADE AND SIGNS PER CALTRANS STD. PLAN ES-5F TYPE 1.
19 —— REMOVE AND SALVAGE EXISTING SIGNS.
20 – PAINT ALL EXISTING SIGNAL HEAD HOUSINGS AND ASSEMBLIES GREEN AND VISORS AND BACKPLATES BLACK PER STD. SPECIFICATIONS.
21 —— REMOVE EXISTING DLC CONDUCTORS.
22 – PAINT 12" SOLID WHITE
23 —— SANDBLAST ALL STRIPING WITHIN INTERSECTION LIMITS.
24 – STENCIL ARROW.
25 —— PROVIDE AND INSTALL R34-2 SIGN ON MASTARM WITH NEW MOUNTING HARDWARE.
26 – PROVIDE AND INSTALL 3-SECTION SIGNAL HEAD WITH BACKPLATE AND 12" LENSES. (CALTRANS STD. 5V-1-T)
27 —— PROVIDE AND INSTALL 2" CONDUIT.

GENERAL NOTES:

- PROTECTED/PERMISSIVE "BACKUP" LOGIC SHALL BE EXTERNAL TO CONTROLLER.
- SEE SHEET 13 FOR ADDITIONAL NOTES.

1/2 0 1 2
3 inches on original drawing

MARK	DATE	DESCRIPTION
REVISIONS		

DESIGNED L. ABAD
DRAWN T. PHAM CHECKED L. NATSUHARA

ORANGE COUNTY
ENVIRONMENTAL MANAGEMENT AGENCY

SEVENTEENTH STREET
AT
HEWES AVENUE
SIGNAL MODIFICATION PLAN

PREPARED UNDER SUPERVISION OF: L. Natsuhara DATE 5/29/92
REGISTERED PROFESSIONAL ENGINEER No. 42679 CIVIL STATE OF CALIFORNIA

SCALE AS SHOWN | DATE JUNE 92 | W. O. NO. R09753 | SHEET 10 OF 13

evhewmsp.m requested from traf on black_D. Wed May 20 15:49:41 PDT 1992

CONSTRUCTION NOTES:

1 —— INSTALL DETECTOR LOOPS AS INDICATED.
2 - PROVIDE & INSTALL NEW DLC'S TO CONTROLLER.
5 —— REMOVE EXISTING DLC CONDUCTORS.
6 - REMOVE AND SALVAGE EXISTING SHELF MOUNT DETECTORS AND HARNESS.
7 —— FURNISH & INSTALL 2 CHANNEL SHELF MOUNT VEHICLE COUNTING DETECTOR AMPLIFIERS WITH EXTEND AND DELAY CAPABILITIES AND NEW HARNESS PER DETECTOR SCHEDULE.
8 - FURNISH & INSTALL VEHICLE COUNTING UNIT (VCS).
9 —— REWIRE CABINET FOR DETECTION INDICATED.
10 - PROVIDE AND INSTALL PEDESTRIAN BARRICADE AND SIGNS PER CALTRANS STD. PLAN ES-5F TYPE I.
11 —— PROVIDE AND INSTALL 2 ADDITIONAL CONDUCTORS FOR FUTURE PROTECTED/PERMISSIVE PHASING.
12 -
13 ——
14 - PROVIDE AND INSTALL R34-2 SIGN AND MOUNTING HARDWARE ON MASTARM.
15 —— STENCIL LEFT TURN ARROW.
16 - PAINT ALL EXISTING SIGNAL HEAD HOUSINGS AND ASSEMBLIES GREEN AND VISORS AND BACKPLATES BLACK PER STD. SPECIFICATIONS.
17 —— PROVIDE AND INSTALL VCS PANEL WITH VCS HARNESS (MULTISONICS PART No. 016050 OR EQUAL).
18 - REMOVE AND SALVAGE EXISTING SIGNAL HEAD.
19 —— PROVIDE AND INSTALL 3 SECTION SIGNAL HEAD WITH 12" LENSES AND BACKPLATE.
20 -
21 ——
22 - REMOVE AND SALVAGE EXISTING CONTROLLER.
23 —— PROVIDE AND INSTALL MULTISONICS 820A CONTROLLER.
24 - INSTALL NEW CONDUCTOR PER SCHEDULE.
25 —— PAINT 12" SOLID WHITE.
26 - SAND BLAST ALL STRIPING WITHIN INTERSECTION.
27 —— PROVIDE AND INSTALL 2" CONDUIT.

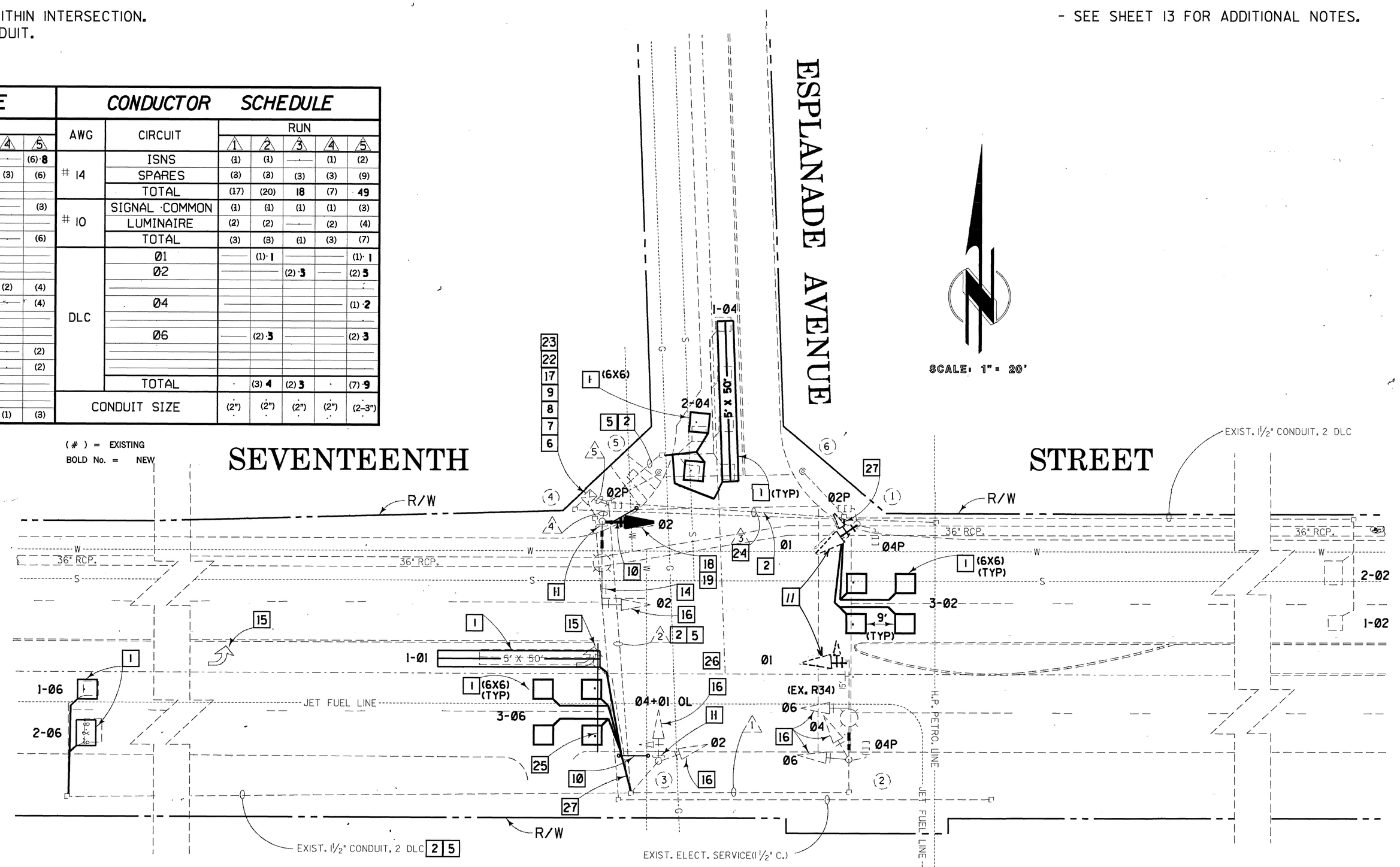
CONDUCTOR SCHEDULE

AWG	CIRCUIT	RUN 1	2	3	4	5
#14	Ø1	(3)	(3)	(3)·5	——	(6)·8
	Ø2	——	(3)	——	(3)	(6)
	Ø4	(3)	(3)	——	——	(3)
	Ø6	(3)	(3)	(3)	——	(6)
	Ø2P	——	——	(2)	(2)	(4)
	Ø4P	(2)	(2)	(2)	——	(4)
	Ø2PPB	——	——	(1)	——	(2)
	Ø4PPB	(1)	(1)	(1)	——	(2)
	PPB COMMON	(1)	(1)	(1)	(1)	(3)

CONDUCTOR SCHEDULE

AWG	CIRCUIT	RUN 1	2	3	4	5
#14	ISNS	(1)	(1)	——	(1)	(2)
	SPARES	(3)	(3)	(3)	(3)	(9)
	TOTAL	(17)	(20)	18	(7)	49
#10	SIGNAL COMMON	(1)	(1)	(1)	(1)	(3)
	LUMINAIRE	(2)	(2)	——	(2)	(4)
	TOTAL	(3)	(3)	(1)	(3)	(7)
DLC	Ø1	——	(1)·1	——	——	(1)·1
	Ø2	——	——	(2)·3	——	(2)·3
	Ø4	——	——	——	——	(1)·2
	Ø6	——	(2)·3	——	——	(2)·3
	TOTAL	·	(3)·4	(2)·3	·	(7)·9
CONDUIT SIZE		(2")	(2")	(2")	(2")	(2-3")

(#) = EXISTING
BOLD No. = NEW



PHASE DIAGRAM

VEHICULAR & PEDESTRIAN MOVEMENTS	Ø1 (OL)	Ø2	Ø3	Ø4	Ø5	Ø6	Ø7	Ø8
NEMA PHASE	Ø1	Ø2	Ø3	Ø4	Ø5	Ø6	Ø7	Ø8
COORDINATION FUNCTION	*	*	*	*	*	*	*	*

* DETERMINED BY MASTER COMPUTER DURING COORDINATED OPERATION.

1+6 → 2+6 → 4

SEQUENCE WITH CALLS ON ALL PHASES.

GENERAL NOTES:

-

- SEE SHEET 13 FOR ADDITIONAL NOTES.

NEW

⊠ INDUCTIVE LOOP DETECTOR SCHEDULE

SENSOR UNIT	CHANNEL	DETECTOR
# 1	1 [1]	1-02 (1)
	2 [2]	2-02 (2)
# 2	1	3-02
	2	SPARE
# 3	1 [3]	1-01
	2 [4]	1-06 (3)
# 4	1 [5]	2-06 (4)
	2	3-06
# 5	1 [6]	1-04
	2 [7]	2-04

6 7

⊠ - DETECTOR LOOP LOCATIONS SHALL BE APPROVED BY ENGINEER IN FIELD PRIOR TO INSTALLATION. ALL DETECTOR UNITS SHALL BE SHELF MOUNTED. DUAL CHANNEL, DUAL OUTPUT PER CHANNEL WITH INTEGRAL COLORCATED EXTENSION AND DELAY CAPABILITY. OUTPUT 'A' SHALL BE TIMED. OUTPUT 'B' SHALL BE PRESENCE MODE FOR SYSTEM SAMPLING ONLY.
(•) = SYSTEM SAMPLER NUMBER.
[•] = VEHICLE COUNTING SYSTEM NUMBER.

EXISTING

INDUCTIVE LOOP DETECTOR SCHEDULE

SENSOR UNIT	CHANNEL	DETECTOR
# 1	1 ●	1-02
	2 ●	2-02(FUT)
	3 ●	1-06
	4 ●	2-06(FUT)
# 2	1	1-01
	2	1-04
	3	SPARE
	4	SPARE
# 3	1 ▲	1-02
	2 ▲	2-02(FUT)
# 4	1 ▲	1-06
	2 ▲	2-06(FUT)
# 5	1 ⊠	2-04
	2	SPARE

● = SYSTEM SAMPLING - NO OUTPUT TO PHASE
▲ = INTEGRAL CALL HOLD CAPABILITY (0-5 SEC MIN.)
⊠ = INTEGRAL CALL DELAY CAPABILITY (0-30 SEC MIN.)

½ 0 1 2
3 Inches on original drawing

ORANGE COUNTY ENVIRONMENTAL MANAGEMENT AGENCY

SEVENTEENTH STREET
AT
ESPLANADE AVENUE
SIGNAL MODIFICATION PLAN

MARK	DATE	DESCRIPTION
REVISIONS		

DESIGNED L. ABAD
DRAWN T. PHAM CHECKED L. NATSUHARA

PREPARED UNDER SUPERVISION — REG. — DATE 5/29/92

SCALE AS SHOWN | DATE JUNE 92 | W. O. NO. R09753 | SHEET 11 OF 13

DRAWING NUMBER 170.11

sevespmsp.m requested from traf on black_D. Wed May 20 15:47:16 PDT 1992

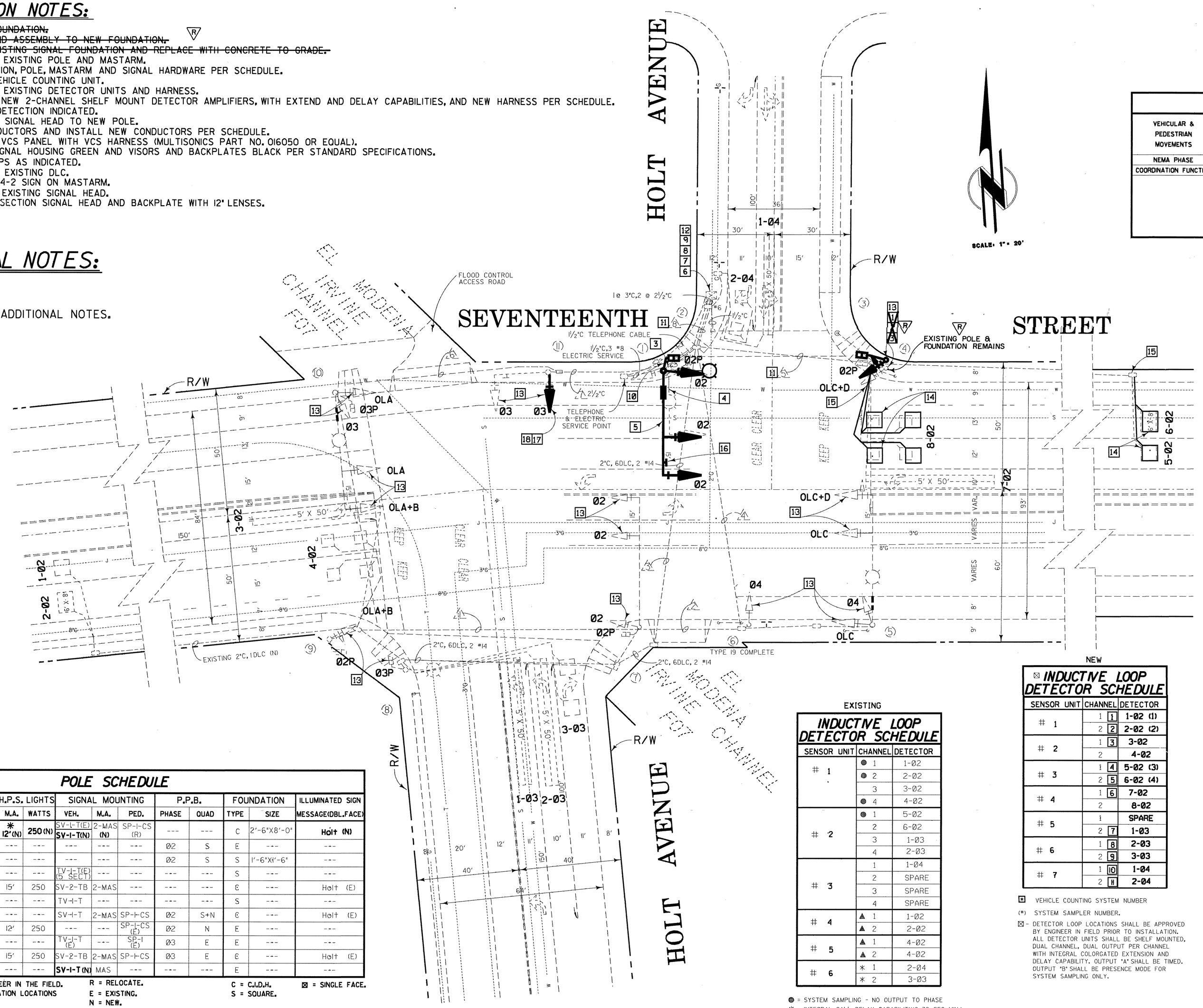
DRAWING NUMBER
SEVENTEENTH ST @ HOLT AVE
DRAWING NUMBER
170.12

CONSTRUCTION NOTES:

~~[1] CONSTRUCT NEW 1A FOUNDATION.~~
~~[2] RELOCATE POLE #4 AND ASSEMBLY TO NEW FOUNDATION.~~ [6]
~~[3] REMOVE TOP 18" OF EXISTING SIGNAL FOUNDATION AND REPLACE WITH CONCRETE TO GRADE.~~
[4] - REMOVE AND SALVAGE EXISTING POLE AND MASTARM.
[5] INSTALL NEW FOUNDATION, POLE, MASTARM AND SIGNAL HARDWARE PER SCHEDULE.
[6] - PROVIDE & INSTALL VEHICLE COUNTING UNIT.
[7] REMOVE AND SALVAGE EXISTING DETECTOR UNITS AND HARNESS.
[8] - PROVIDE AND INSTALL NEW 2-CHANNEL SHELF MOUNT DETECTOR AMPLIFIERS, WITH EXTEND AND DELAY CAPABILITIES, AND NEW HARNESS PER SCHEDULE.
[9] REWIRE CABINET FOR DETECTION INDICATED.
[10] - RELOCATE PEDESTRIAN SIGNAL HEAD TO NEW POLE.
[11] REMOVE EXISTING CONDUCTORS AND INSTALL NEW CONDUCTORS PER SCHEDULE.
[12] - PROVIDE AND INSTALL VCS PANEL WITH VCS HARNESS (MULTISONICS PART NO. 016050 OR EQUAL).
[13] PAINT ALL EXISTING SIGNAL HOUSING GREEN AND VISORS AND BACKPLATES BLACK PER STANDARD SPECIFICATIONS.
[14] - INSTALL DTECTOR LOOPS AS INDICATED.
[15] SPLICE NEW LOOPS TO EXISTING DLC.
[16] - PROVIDE & INSTALL R34-2 SIGN ON MASTARM.
[17] REMOVE AND SALVAGE EXISTING SIGNAL HEAD.
[18] - PROVIDE & INSTALL 3-SECTION SIGNAL HEAD AND BACKPLATE WITH 12" LENSES.

GENERAL NOTES:

- SEE SHEET 13 FOR ADDITIONAL NOTES.



PHASE DIAGRAM

VEHICULAR & PEDESTRIAN MOVEMENTS	OL"A" OL"C"	CL CL	OL"D" OL"C"	OL"A" OL"B"
NEMA PHASE	Ø2	CLEARANCE	Ø3 + OLCD	Ø4
COORDINATION FUNCTION	*	·	·	·

SEQUENCE WITH CALL ON ALL PHASES

2 OL → CL → 3 OL → 4 OL

CONDUCTOR SCHEDULE

EXISTING

AWG	CIRCUIT	RUN 1	2	3	4	5	6	7	8
#14	Ø2	3	3	3	3	3	3	**3**	9
	Ø3	---	---	3	3	3	3	---	9
	Ø4	3	3	3	6	---	3	---	9
	Ø2P	---	2	---	2	2	---	**2**	6
	Ø3P	---	---	---	2	---	---	2	4
	OLA	---	---	---	---	---	---	---	---
	OLB	---	---	---	---	---	---	---	---
	OLC	---	---	---	---	---	---	---	---
	OLD	---	---	---	---	---	---	---	---
	Ø2PPB	⊦	⊦	---	⊦	⊦	---	---	2
	Ø3PPB	---	---	---	⊦	---	---	**⊦**	2
	PPB COMMON	⊦	⊦	---	⊦	⊦	---	**⊦**	2
	ISNS	---	---	---	⊦	---	---	**⊦**	2
	SPARES	5	5	5	5	5	5	**3**	18
	TOTAL	13	15	14	25	15	14	**13**	63
#10	SIGNAL & SIGN COMMON	1	1	1	1	1	1	**-1**	4
	LUMINAIRE	2	2	---	2	---	---	**2**	4
	TOTAL	3	3	1	3	1	1	**3**	8
DLC	Ø2	---	3	---	3	3	---	---	6
	Ø3	3	3	---	3	---	---	---	3
	Ø4	---	---	---	---	---	---	---	2
	TOTAL	3	6	---	6	3	---	---	11
CONDUIT SIZE		2"	2"	2"	2"	2"	2"	2"	3"

BOLD No. = NEW

POLE SCHEDULE

	NO.	POLE DATA TYPE	HEIGHT	SIGNAL M.A.	H.P.S. LIGHTS M.A.	WATTS	SIGNAL MOUNTING VEH.	M.A.	PED.	P.P.B. PHASE	QUAD	FOUNDATION TYPE	SIZE	ILLUMINATED SIGN MESSAGE(DBL.FACE)
5	①	I8 (E) **26-3-70(N)**	30'(N)	40'(N)	✱ 12'(N)	250 (N)	SV-I-T(E) **SV-I-T(N)**	2-MAS (N)	SP-I-CS (R)	---	---	C	2'-6"X8'-0"	**Hoit (N)**
	②	PPB (E) POST	3'-10"	---	---	---	---	---	---	Ø2	S	E	---	---
	③	PPB (E) POST	3'-10"	---	---	---	---	---	---	Ø2	S	S	1'-6"X1'-6"	---
2	④	I-A (R)	10'	---	---	---	TV-I-T(E) (5 SECT)	---	---	---	---	S	---	---
	⑤	29-5-70 (E)	36'	50'	15'	250	SV-2-TB	2-MAS	---	---	---	E	---	Holt (E)
	⑥	I-A (E)	10'	---	---	---	TV-I-T	---	---	---	---	S	---	---
	⑦	28-5-70 (E)	17'	50'	---	---	SV-I-T	2-MAS	SP-I-CS	Ø2	S+N	E	---	Holt (E)
	⑧	I5 (E)	28'-6"	---	12'	250	---	---	SP-I-CS (E)	Ø2	N	E	---	---
	⑨	I-A (E)	10'	---	---	---	TV-I-T (E)	---	SP-I (E)	Ø3	E	E	---	---
	⑩	26-4-70 (E)	36'	45'	15'	250	SV-2-TB	2-MAS	SP-I-CS	Ø3	E	E	---	Holt (E)
	⑪	I6-S (E)	17'	20'	---	---	**SV-I-T(N)**	MAS	---	---	---	E	---	---

EXACT POLE LOCATIONS BY ENGINEER IN THE FIELD. POTHOLE MAST ARM POLE FOUNDATION LOCATIONS PRIOR TO ORDERING POLES.

R = RELOCATE. E = EXISTING. N = NEW. ✱ = TURN MASTARM 90°

C = C.I.D.H. S = SQUARE.

⊠ = SINGLE FACE.

INDUCTIVE LOOP DETECTOR SCHEDULE

EXISTING

SENSOR UNIT	CHANNEL	DETECTOR
# 1	● 1	1-Ø2
	● 2	2-Ø2
	3	3-Ø2
	● 4	4-Ø2
# 2	● 1	5-Ø2
	2	6-Ø2
	3	1-Ø3
	4	2-Ø3
# 3	1	1-Ø4
	2	SPARE
	3	SPARE
	4	SPARE
# 4	▲ 1	1-Ø2
	▲ 2	2-Ø2
# 5	▲ 1	4-Ø2
	▲ 2	4-Ø2
# 6	✱ 1	2-Ø4
	✱ 2	3-Ø3

● = SYSTEM SAMPLING - NO OUTPUT TO PHASE
✱ = INTEGRAL CALL DELAY CAPABILITY(0-30 SEC. MIN.)
▲ = INTEGRAL CALL HOLD CAPABILITY (0-5 SEC. MIN.)

⊠ INDUCTIVE LOOP DETECTOR SCHEDULE

NEW

SENSOR UNIT	CHANNEL	DETECTOR
# 1	1 [1]	**1-02 (1)**
	2 [2]	**2-02 (2)**
# 2	1 [3]	**3-02**
	2	**4-02**
# 3	1 [4]	**5-02 (3)**
	2 [5]	**6-02 (4)**
# 4	1 [6]	**7-02**
	2	**8-02**
# 5	1	**SPARE**
	2 [7]	**1-03**
# 6	1 [8]	**2-03**
	2 [9]	**3-03**
# 7	1 [10]	**1-04**
	2 [11]	**2-04**

⊡ VEHICLE COUNTING SYSTEM NUMBER

(✱) SYSTEM SAMPLER NUMBER.

⊠ - DETECTOR LOOP LOCATIONS SHALL BE APPROVED BY ENGINEER IN FIELD PRIOR TO INSTALLATION. ALL DETECTOR UNITS SHALL BE SHELF MOUNTED, DUAL CHANNEL, DUAL OUTPUT PER CHANNEL WITH INTEGRAL COLORGATED EXTENSION AND DELAY CAPABILITY. OUTPUT "A" SHALL BE TIMED. OUTPUT "B" SHALL BE PRESENCE MODE FOR SYSTEM SAMPLING ONLY.

1 ½ 0 1 2
3 inches on original drawing

MARK	DATE	DESCRIPTION
		RECORD DRAWING (A.M.)

REVISIONS

DESIGNED L. ABAD
DRAWN T. PHAM CHECKED L. NATSUHARA

ORANGE COUNTY ENVIRONMENTAL MANAGEMENT AGENCY

SEVENTEENTH STREET AT HOLT AVENUE

SIGNAL MODIFICATION PLAN

PREPARED UNDER SUPERVISION OF LAWRENCE NATSUHARA, RCE 20001, STATE OF CALIFORNIA, PROFESSIONAL ENGINEER, DATE

SCALE AS SHOWN | DATE JUNE 92 | W. O. NO. R09753 | SHEET 12 OF 13

DRAWING NUMBER
170.12

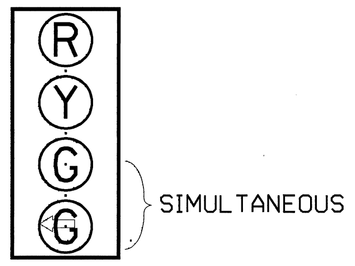
PLANHOLD CORPORATION • PANEL DIAGRAM
FOR DISPLAY PURPOSES ONLY

evholsmp.m requested from traf on black_D. Wed May 20 15:52:01 PDT 1992

DETAIL A

4-SECTION SIGNAL HEAD

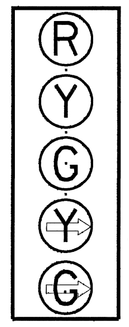
12" LENSES



DETAIL E

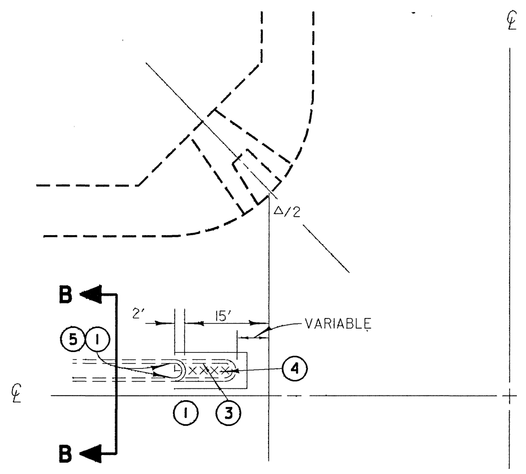
5-SECTION SIGNAL HEAD

12" LENSES

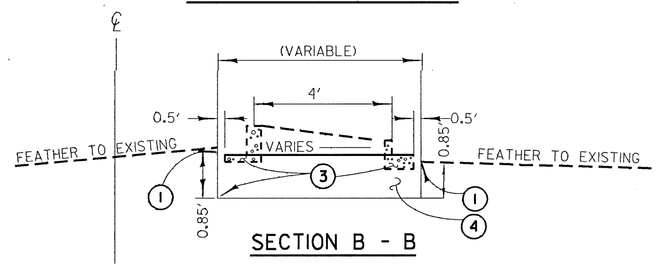


DETAIL B

INTERSECTIONS RAISED MEDIAN



TYPICAL INTERSECTION



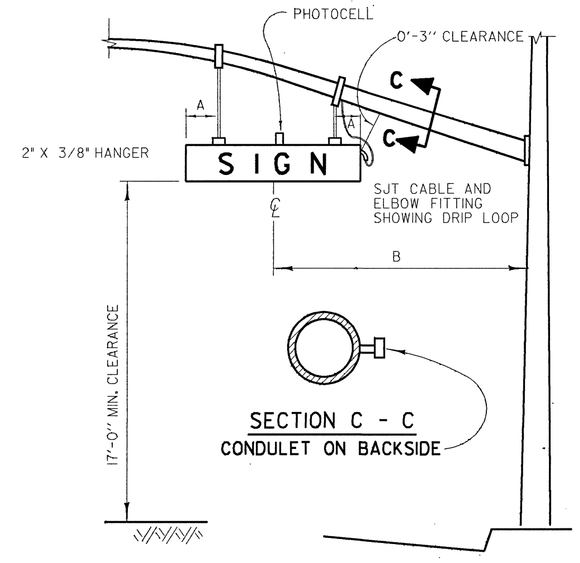
SECTION B - B

CONSTRUCTION NOTES - DETAILS A & B

1. SAWCUT AND JOIN EXISTING
2. CONSTRUCT SIDEWALK ACCESS RAMP
3. REMOVE CONCRETE
4. CONSTRUCT 0.85' AC OVER NATIVE SOIL
5. CONSTRUCT TYPE CI-8 CONCRETE CURB PER APWA STD. 104-0

DETAIL C

STREET NAME SIGN COMPONENTS



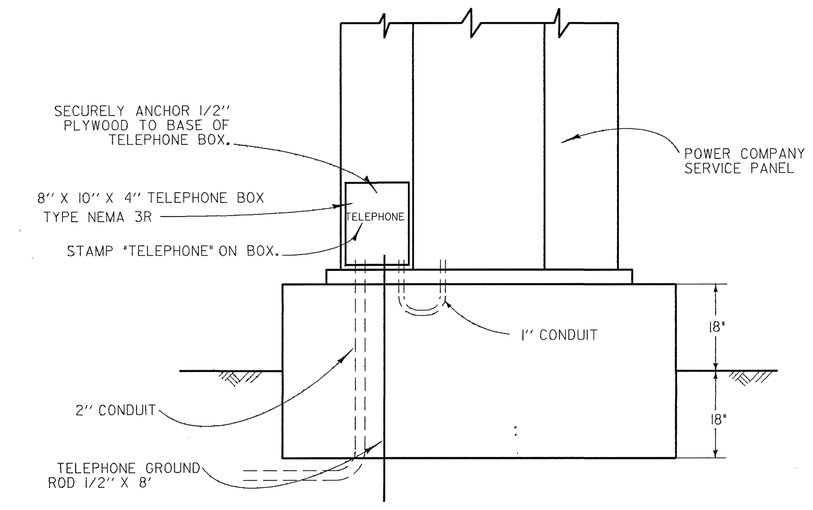
NOTES - DETAIL C

A 1'-6" MINIMUM

B 10'-6" CENTERLINE OF SIGN TO FACE OF POLE.

DETAIL D

TELEPHONE SERVICE BOX

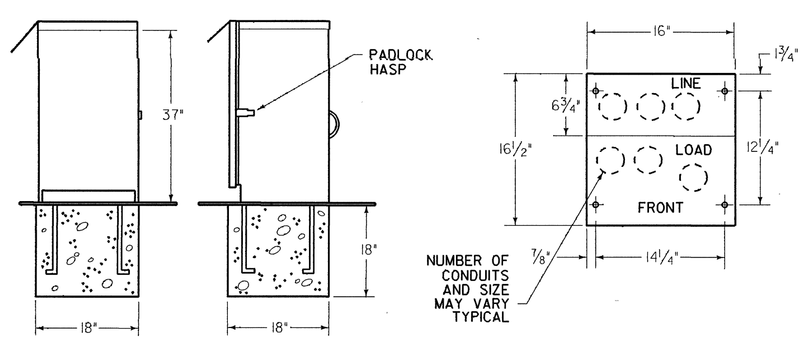


GENERAL NOTES: ⚠

1. ALL WORK, MATERIALS AND EQUIPMENT SHALL CONFORM TO THE REQUIREMENTS OF THE CALIFORNIA, DEPT. OF TRANSPORTATION, STANDARD PLANS AND STANDARD SPECIFICATIONS DATED JANUARY 1988 AND THE SPECIAL PROVISIONS FOR THIS PROJECT.
2. CONDUCTOR SCHEDULE IS FURNISHED AS AN INSTALLATION GUIDE ONLY. IT SHALL BE THE CONTRACTORS RESPONSIBILITY TO PROVIDE THE CORRECT CONDUCTORS REQUIRED FOR THE INTENDED OPERATION.
3. UTILITIES SHOWN ON THESE PLANS ARE CORRECT AND ACCURATE TO THE EXTENT OF AVAILABLE RECORDS AND KNOWLEDGE. THE CONTRACTOR, HOWEVER, IS REQUIRED TO ASCERTAIN THE EXACT LOCATION OF UNDERGROUND FACILITIES PRIOR TO DOING WORK THAT MAY DAMAGE SUCH FACILITIES OR INTERFERE WITH THEIR SERVICE.
4. 48 HOURS PRIOR TO BEGINNING OF CONSTRUCTION, THE CONTRACTOR SHALL CONTACT ORANGE COUNTY E.M.A. FOR INSPECTION, AT 567-7800.
5. THE ENGINEER SHALL APPROVE POLE AND LOOP DETECTION PLACEMENT IN THE FIELD PRIOR TO INSTALLATION.
6. ALL CONDUIT SHALL BE 2" UNLESS OTHERWISE NOTED.
7. ALL PULL BOXES SHALL BE #5 UNLESS OTHERWISE NOTED.
8. ALL SALVAGED EQUIPMENT SHALL BE DELIVERED BY CONTRACTOR TO ORANGE COUNTY YARD AT 1152 EAST FRUIT ST, SANTA ANA, CA. CONTRACTOR SHALL GIVE A 48-HOUR NOTICE TO THE COUNTY PRIOR TO THE DELIVERY DATE.
9. CONTRACTOR SHALL PROVIDE ALL NECESSARY TELEPHONE AND ELECTRICAL SERVICE LINES AND INTERCONNECT HOOK-UPS BETWEEN THE LOCAL CONTROLLER AND THE SYSTEM MASTER.
10. PEDESTRIAN INDICATION SHALL BE INTERNATIONAL SYMBOL.
11. PEDESTRIAN PUSH BUTTON SHALL BE TYPE B WITH INTERNATIONAL SYMBOL PLATE.
12. ALL VEHICLE INDICATIONS SHALL BE 12" WITH BACKPLATES, GLASS REFLECTORS, AND GLASS LENSES, UNLESS SHOWN OTHERWISE.
13. CONTRACTOR SHALL POTHOLE CONFLICTING UTILITIES AS DIRECTED BY ENGINEER.
14. CONTRACTOR SHALL AVOID DAMAGING EXISTING UTILITIES. (SEE SPECIAL PROVISIONS).
15. INDUCTIVE LOOPS SHALL BE 6' X 6' WITH 9' SPACING IN THE DIRECTION OF TRAVEL UNLESS OTHERWISE NOTED.
16. ALL DETECTOR CABLE HOMERUNS SHALL BE IN THE CROSSWALK AREA.
17. ALL 6'x6' DETECTOR LOOPS SHALL BE FOUR (4) TURNS.
18. ALL QUADROPOLE DETECTOR LOOPS SHALL BE TWO (2-4-2) TURNS.

DETAIL F ⚠⚠

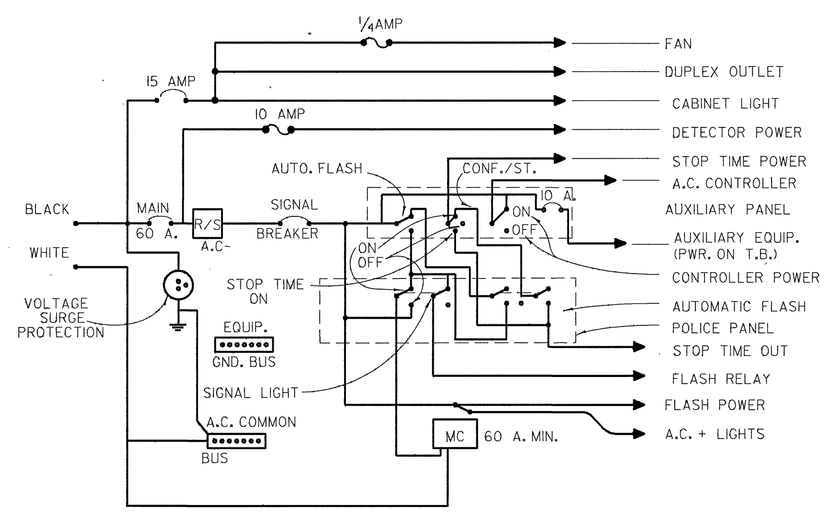
INTERCONNECT SPLICE CABINET



1. FOUNDATION TO BE 18" X 18". BOLT CIRCLE PER MFG. TEMPLATE.
2. ENCLOSURE SHALL BE FURNISHED WITH A DETACHABLE MOUNTING BASE.
3. ALL FACTORY INSTALLED COMPONENTS SHALL BE U.L. LISTED OR PER PUBLISHED N.E.C. STANDARDS.
4. A ¾" CONSTRUCTION GRADE PLYWOOD PANEL SHALL BE FASTENED TO THE REAR WALL. PANEL SHALL BE 12" X 24" AND SHALL HAVE A No. MI-25 AND R-841 STANDOFF FASTENED IN THE CENTER OF THE PANEL.
5. ENCLOSURE FINISH SHALL CONFORM TO A.S.T.M. B-117. COLOR SHALL BE PORCELAIN WHITE.
6. PROVIDE 1½" CONDUIT FOR FUTURE 115 VAC SERVICE.

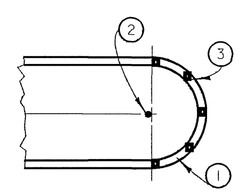
DETAIL G ⚠

CONTROLLER CABINET WIRING



DETAIL H

RAISED MEDIAN MARKING



NOTES - DETAIL H

① PAINT MEDIAN NOSE WITH HIGHLY REFLECTIVE PREMIXED WHITE TRAFFIC PAINT WITH GLASS BEADS.

② INSTALL FLEXIBLE VERTICAL TYPE K MARKER, R7, R10 OR TYPE N-10N TELESPAR POST AS INDICATED ON PLAN.

③ INSTALL YELLOW REFLECTIVE PAVEMENT MARKERS ON TOP SURFACE OF MEDIAN CURB NOSE AT 2' C.C. SPACING (MINIMUM 5 MARKERS). PLACE REFLECTIVE SURFACE OF MARKERS PARALLEL TO ℄ OF ROADWAY.

1 ½ 0 1 2
3 Inches on original drawing

MARK	DATE	DESCRIPTION
⚠1	3-29-88	ADDED NOTE 17.
⚠2	4-4-88	DELETED TYPE 11 SERVICE. ADDED INTERCONNECT SPLICE CABINET.
⚠3	12-8-88	MODIFIED INTERCONNECT SPLICE CABINET.
⚠4	11-18-91	MODIFIED CONTROLLER CABINET WIRING.

REVISIONS

DESIGNED L. ABAD
DRAWN T. PHAM CHECKED L. NATSUHARA

ORANGE COUNTY ENVIRONMENTAL MANAGEMENT AGENCY

DETAIL SHEET

REGISTERED PROFESSIONAL ENGINEER LANCE N. NATSUHARA No. 42679 Exp. 3-31-96 CIVIL STATE OF CALIFORNIA

PREPARED UNDER SUPERVISION OF RCE 42679 DATE 5/29/92

SCALE AS SHOWN | DATE JUNE 92 | W. O. NO. R09753

SHEET 13 OF 13

DRAWING NUMBER 170.13
DRAWING NUMBER
DRAWING NUMBER
newdet.m requested from traf on black_D. Wed May 20 15:32:48 PDT 1992