Bridge Inspection Records Information System

The requested documents have been generated by the BIRIS.

The documents provided are considered confidential and may only be released outside of the department of transportation upon proper execution of the confidentiality agreement.

State of California
Department of Transportation

Division of Maintenance
Structures Maintenance & Investigations

ClibPDF - www.fastio.com

DEPARTMENT OF TRANSPORTATION
Structure Maintenance & Investigations

Caltrans

Bridge Number : **55C0529R**
Facility Carried: **E/B LGNA HILLS DR**
Location : **400' E/O MOULTON PKWY**
City : **LAGUNA HILLS**
Inspection Date : **11-JUN-02**

Inspection Type

Routine	Group A	Underwater	Special	Other
X				

Bridge Inspection Report

Name : ALISO CREEK

CONSTRUCTION INFORMATION

Year Built : 1985
Year Widened : N/A
Length (m) : 59.1

Skew (degrees): 27
No. of Joints : 0
No. of Hinges : 0

Description of Structure : Continuous 3-span CIP/PS concrete box girder (6 cells) with RC 2-column bents and RC open end diaphragm abutments, all supported upon steel piles.

Span Configuration : (W) 16.2 m, 24.1 m, 17.4 m (E) c/c

LOAD CAPACITY AND RATINGS

Design Live Load : MS - 18 OR HS - 20
Inventory Rating : 32.6 metric tons Calculation Method : LOAD FACTOR
Operating Rating : 99.9 metric tons Calculation Method : LOAD FACTOR
Permit Rating : PPPPP
Posting Load : Type 3 N/A english tons Type 3S2 N/A english tons Type 3-3 N/A english tons

DESCRIPTION ON STRUCTURE

Bridge width : (S) 0.3 m br, 1.5 m sw, 10.7 m, 0.3 m cu, 0.3 m br (N)
Total Width : 13.1 m Net Width : 10.70 m No. of Lanes : 2
Rail Description : Concrete Rail Code : 0000
Min. Vertical Clearance : Unimpaired

DESCRIPTION UNDER STRUCTURE

Channel Description : Natural earth trapezoidal with grouted rock slopes thru the site.

REVISIONS

Rail Ratings:
(New): 0000
(Old): 1000
The southerly barrier consists of a lower concrete parapet (not to current standards) and an upper timber railing.

CONDITION OF STRUCTURE

The structure is in good condition.

SCOUR

Approximately 0.3 m of the pile cap for the westerly abutment is exposed at various locations. Water from the weep holes is eroding the uncompacted soil.

MISCELLANEOUS

Vehicular parking is at the northeast quadrant.

ELEMENT LEVEL INSPECTION RATINGS

F#	Elem No.	Element Description	Env	Total Units Quantity	Qty in each Condition State St. 1	St. 2	St. 3	St. 4	St. 5
01	12	Concrete Deck - Bare	2	610 sq.m.	610	0	0	0	0
01	104	P/S Conc Closed Web/Box Girder	2	59 m.	59	0	0	0	0
01	205	Reinforced Conc Column or Pile Extension	2	4 ea.	4	0	0	0	0

Printed on : 13-JUN-2002 10:05:52 AM

AUG - 5 2002

ClibPDF - www.fastio.com

Bridge No.: 55C0529R Location: 400' E/O MOULTON PKWY Inspection Date: 11-JUN-02

F#	Elem No.	Element Description	Env	Total Units Quantity	Qty in each Condition State St. 1	St. 2	St. 3	St. 4	St. 5
01	210	Reinforced Conc Pier Wall	2	30 m.	30	0	0	0	0
01	215	Reinforced Conc Abutment	2	30 m.	30	0	0	0	0
01	225	Unpainted Steel Submerged Pile	2	64 ea.	64	0	0	0	0
01	302	Compression Joint Seal	2	28 m.	28	0	0	0	0
01	331	Reinforced Conc Bridge Railing	2	71 m.	71	0	0	0	
01	335	Other Bridge Railing	2	71 m.	71	0	0		

WORK RECOMMENDATIONS - NONE

Inspected By : M. Ogata

M. Ogata

Registered Civil Engineer

REGISTERED PROFESSIONAL ENGINEER
MAKOTO OGATA
No. C23989
Exp. 12-31-05
CIVIL
STATE OF CALIFORNIA

CC : TMRut
City of Laguna Hills

Printed on : 13-JUN-2002 10:05:52 AM

AUG - 5 2002

ClibPDF - www.fastio.com

Bridge No.: 55C0529R Location: 400' E/O MOULTON PKWY Inspection Date: 11-JUN-02

STRUCTURE INVENTORY AND APPRAISAL REPORT

********** IDENTIFICATION **********

(1) STATE NAME - CALIFORNIA 06 9
(8) STRUCTURE NUMBER 55C0529R
(5) INVENTORY ROUTE(ON/UNDER) - ON 1 50 0M274N
(2) HIGHWAY AGENCY DISTRICT 12
(3) COUNTY CODE 059 (4) PLACE CODE 39220
(6) FEATURE INTERSECTED - ALISO CREEK
(7) FACILITY CARRIED - E/B LGNA HILLS DR
(9) LOCATION - 400' E/O MOULTON PKWY
(11) MILEPOINT/KILOMETERPOINT 0
(12) BASE HIGHWAY NETWORK - NOT ON NET 0
(13) LRS INVENTORY ROUTE & SUBROUTE
(16) LATITUDE 33 DEG 35 MIN 34 SEC
(17) LONGITUDE 117 DEG 42 MIN 43 SEC
(98) BORDER BRIDGE STATE CODE % SHARE %
(99) BORDER BRIDGE STRUCTURE NUMBER

********** STRUCTURE TYPE AND MATERIAL **********

(43) STRUCTURE TYPE MAIN: MATERIAL - PRSTR CONC CONT
TYPE - BOX BEAM OR GDR - MULTIPLE CODE 6 05
(44) STRUCTURE TYPE APPR: MATERIAL -
TYPE - CODE
(45) NUMBER OF SPANS IN MAIN UNIT 3
(46) NUMBER OF APPROACH SPANS 0
(107) DECK STRUCTURE TYPE - CIP CONCRETE CODE 1
(108) WEARING SURFACE / PROTECTIVE SYSTEM:
A) TYPE OF WEARING SURFACE - CONCRETE CODE 1
B) TYPE OF MEMBRANE - NONE CODE 0
C) TYPE OF DECK PROTECTION - NONE CODE 0

********** AGE AND SERVICE **********

(27) YEAR BUILT 1985
(106) YEAR RECONSTRUCTED 0000
(42) TYPE OF SERVICE: ON - HIGHWAY-PEDESTRIAN 5
UNDER - WATERWAY 5
(28) LANES: ON STRUCTURE 02 UNDER STRUCTURE
(29) AVERAGE DAILY TRAFFIC 3000
(30) YEAR OF ADT 1998 (109) TRUCK ADT 1%
(19) BYPASS, DETOUR LENGTH 2 KM

********** GEOMETRIC DATA **********

(48) LENGTH OF MAXIMUM SPAN 24.1 M
(49) STRUCTURE LENGTH 59.1 M
(50) CURB OR SIDEWALK: LEFT 1.5 M RIGHT .3 M
(51) BRIDGE ROADWAY WIDTH CURB TO CURB 10.7 M
(52) DECK WIDTH OUT TO OUT 13.1 M
(32) APPROACH ROADWAY WIDTH (W/SHOULDERS) 10.7 M
(33) BRIDGE MEDIAN - NO MEDIAN 0
(34) SKEW 27 DEG (35) STRUCTURE FLARED NO
(10) INVENTORY ROUTE MIN VERT CLEAR 99.99 M
(47) INVENTORY ROUTE TOTAL HORIZ CLEAR 10.7 M
(53) MIN VERT CLEAR OVER BRIDGE RDWY 99.99 M
(54) MIN VERT UNDERCLEAR REF - NOT H/RR 0 M
(55) MIN LAT UNDERCLEAR RT REF - NOT H/RR 0 M
(56) MIN LAT UNDERCLEAR LT 0 M

********** NAVIGATION DATA **********

(38) NAVIGATION CONTROL - NOT APPLICABLE CODE N
(111) PIER PROTECTION - NOT REQUIRED CODE 1
(39) NAVIGATION VERTICAL CLEARANCE 0 M
(116) VERT-LIFT BRIDGE NAV MIN VERT CLEAR 0 M
(40) NAVIGATION HORIZONTAL CLEARANCE 0

****

SUFFICIENCY RATING = 95.7

STATUS =

HEALTH INDEX = 100

********** CLASSIFICATION ********** CODE

(112) NBIS BRIDGE LENGTH - YES Y
(104) HIGHWAY SYSTEM - NOT ON NHS 0
(26) FUNCTIONAL CLASS - MINOR ARTERIAL URBAN 16
(100) DEFENSE HIGHWAY - NOT STRAHNET 0
(101) PARALLEL STRUCTURE - LEFT STRUCTURE L
(102) DIRECTION OF TRAFFIC - 1 WAY 1
(103) TEMPORARY STRUCTURE -
(105) FEDERAL LANDS HIGHWAY - NOT APPLICABLE 0
(110) DESIGNATED NATIONAL NETWORK - NOT ON NET 0
(20) TOLL - ON FREE ROAD 3
(21) MAINTAIN - CITY OR MUNICIPAL HIGHWAY AGENCY 4
(22) OWNER - CITY OR MUNICIPAL HIGHWAY AGENCY 4
(37) HISTORICAL SIGNIFICANCE - NOT ELIGIBLE 5

********** CONDITION ********** CODE

(58) DECK 7
(59) SUPERSTRUCTURE 8
(60) SUBSTRUCTURE 7
(61) CHANNEL & CHANNEL PROTECTION 8
(62) CULVERTS N

********** LOAD RATING AND POSTING ********** CODE

(31) DESIGN LOAD - MS - 18 OR HS - 20 5
(63) OPERATING RATING METHOD - LOAD FACTOR 1
(64) OPERATING RATING - 99.9
(65) INVENTORY RATING METHOD - LOAD FACTOR 1
(66) INVENTORY RATING - 32.6
(70) BRIDGE POSTING - Equal to or above legal loads 5
(41) STRUCTURE OPEN, POSTED OR CLOSED - A
DESCRIPTION - OPEN, NO RESTRICTION

********** APPRAISAL ********** CODE

(67) STRUCTURAL EVALUATION 7
(68) DECK GEOMETRY 5
(69) UNDERCLEARANCES, VERTICAL & HORIZONTAL N
(71) WATER ADEQUACY 9
(72) APPROACH ROADWAY ALIGNMENT 8
(36) TRAFFIC SAFETY FEATURES 0000
(113) SCOUR CRITICAL BRIDGES 8

********** PROPOSED IMPROVEMENTS **********

(75) TYPE OF WORK - CODE
(76) LENGTH OF STRUCTURE IMPROVEMENT M
(94) BRIDGE IMPROVEMENT COST
(95) ROADWAY IMPROVEMENT COST
(96) TOTAL PROJECT COST
(97) YEAR OF IMPROVEMENT COST ESTIMATE
(114) FUTURE ADT 3500
(115) YEAR OF FUTURE ADT 2010

********** INSPECTIONS **********

(90) INSPECTION DATE 06/02 (91) FREQUENCY 24 MO
(92) CRITICAL FEATURE INSPECTION: (93) CFI DATE
A) FRACTURE CRIT DETAIL - NO -1 MO A)
B) UNDERWATER INSP - NO -1 MO B)
C) OTHER SPECIAL INSP - NO -1 MO C)

Printed on : 13-JUN-2002 10:05:52 AM

AUG - 5 2002

ClibPDF - www.fastio.com

DEPARTMENT OF TRANSPORTATION
Structure Maintenance & Investigations

Caltrans

Bridge Number	55C0529R
Facility Carried	E/B LGNA HILLS DR
Location	400' E/O MOULTON PKWY
City	LAGUNA HILLS
Inspection Date	28-SEP-01

Inspection Type

Routine	Group A	Underwater	Special	Other
				X

Bridge Inspection Report

Name ALISO CREEK

CONSTRUCTION INFORMATION

Year Built	1985	Skew (degrees)	27
Year Widened	N/A	No of Joints	0
Length (m)	59 1	No of Hinges	0

Description of Structure: Continuous 3-span CIP/PS concrete box girder (6 cells) with RC 2-column bents and RC open end diaphragm abutments all supported upon steel piles

Span Configuration: (W) 16 2 m 24 1 m 17 4 m (E) c/c

LOAD CAPACITY AND RATINGS

Design Live Load	MS - 18 OP HS - 20		
Inventory Rating	32 6 metric tons	Calculation Method	LOAD FACTOR
Operating Rating	99 9 metric tons	Calculation Method	LOAD FACTOR
Permit Rating	PPPPP		

Posting Load: Type 3 N/A english tons Type 3S2 N/A english tons Type 3-3 N/A english tons

DESCRIPTION ON STRUCTURE

Bridge width (S) 0 3 m br 1 5 m sw 10 7 m 0 3 m cu 0 3 m br (N)

Total Width 13 1 m Net Width 10 70 m No of Lanes 2

Rail Description Concrete Rail Code 1000

Min Vertical Clearance Unimpaired

DESCRIPTION UNDER STRUCTURE

Channel Description: Natural earth trapezoidal with grouted rock slopes thru the site

REVISIONS

City (New) Laguna Hills (Old) Unincorporated
The Bridge Inspection Reports were previously sent to the County of Orange All future reports will be sent to the City of Laguna Hills

CONDITION OF STRUCTURE

The structure is in good condition

SCOUR

Approximately 0 3 m of the pile cap for the westerly abutment is exposed at various locations Water from the weep holes is eroding the uncompacted soil

MISCELLANEOUS

Vehicular parking is at the northeast quadrant

ELEMENT LEVEL INSPECTION RATINGS

F#	Elem No	Element Description	Env	Total Units Quantity	Qty in each Condition State St 1	St 2	St 3	St 4	St 5
01	12	Concrete Deck - Bare	2	610 sq m	610	0	0	0	0
01	104	P/S Conc Closed Web/Box Girder	2	59 m	59	0	0	0	0
01	205	Reinforced Conc Column or Pile Extension	2	4 ea	4	0	0	0	0
01	210	Reinforced Conc Pier Wall	2	30 m	30	0	0	0	0

Printed on 28-SEP-2001 07 42 44 AM

ClibPDF - www.fastio.com

Bridge No 55C0529R Location 400' E/O MOULTON PKWY Inspection Date 28-SEP-01

F#	Elem No	Element Description	Env	Total Units Quantity	Qty in each Condition State St 1	St 2	St 3	St 4	St 5
01	215	Reinforced Conc Abutment	2	30 m	30	0	0	0	0
01	225	Unpainted Steel Submerged Pile	2	64 ea	64	0	0	0	0
01	302	Compression Joint Seal	2	28 m	28	0	0	0	0
01	331	Reinforced Conc Bridge Railing	2	142 m	142	0	0	0	0

WORK RECOMMENDATIONS - NONE

Inspected By M Ogata

M. Ogata

Registered Civil Engineer

REGISTERED PROFESSIONAL ENGINEER
MAKOTO OGATA
No C23989
Exp 12-31-01
CIVIL
STATE OF CALIFORNIA

CC TMRut
City of Laguna Hills
Orange County

ClibPDF - www.fastio.com

Bridge No 55C0529R Location 400' E/O MOULTON PKWY Inspection Date 28-SEP-01

STRUCTURE INVENTORY AND APPRAISAL REPORT

********** **** IDENTIFICATION **********

(1) STATE NAME - CALIFORNIA 06 9
(8) STRUCTURE NUMBER 55C0529R
(5) INVENTORY ROUTE(ON/UNDER) ON 1 50 0M274N
(2) HIGHWAY AGENCY DISTRICT 12
(3) COUNTY CODE 059 (4) PLACE CODE 39220
(6) FEATURE INTERSECTED ALISO CREEK
(7) FACILITY CARRIED - E/B LGNA HILLS DR
(9) LOCATION 400 E/O MOULTON PKWY
(11) MILEPOINT/KILOMETERPOINT 0
(12) BASE HIGHWAY NETWORK NOT ON NET 0
(13) LRS INVENTORY ROUTE & SUBROUTE
(16) LATITUDE 33 DEG 35 MIN 34 SEC
(17) LONGITUDE 117 DEG 42 MIN 43 SEC
(98) BORDER BRIDGE STATE CODE % SHARE %
(99) BORDER BRIDGE STRUCTURE NUMBER

********** STRUCTURE TYPE AND MATERIAL **** ******

(43) STRUCTURE TYPE MAIN MATERIAL PRSTR CONC CONT
TYPE BOX BEAM OR GDR MULTIPLE CODE 6 05
(44) STRUCTURE TYPE APPR MATERIAL
TYPE - CODE
(45) NUMBER OF SPANS IN MAIN UNIT 3
(46) NUMBER OF APPROACH SPANS 0
(107) DECK STRUCTURE TYPE CIP CONCRETE CODE 1
(108) WEARING SURFACE / PROTECTIVE SYSTEM
A) TYPE OF WEARING SURFACE CONCRETE CODE 1
B) TYPE OF MEMBRANE NONE CODE 0
C) TYPE OF DECK PROTECTION NONE CODE 0

*** * ******* ****** AGE AND SERVICE **** * *********

(27) YEAR BUILT 1985
(106) YEAR RECONSTRUCTED 0000
(42) TYPE OF SERVICE ON HIGHWAY PEDESTRIAN 5
UNDER WATERWAY 5
(28) LANES ON STRUCTURE 02 UNDER STRUCTURE
(29) AVERAGE DAILY TRAFFIC 3000
(30) YEAR OF ADT 1998 (109) TRUCK ADT 1%
(19) BYPASS DETOUR LENGTH 2 KM

**** ****** ****** GEOMETRIC DATA **********

(48) LENGTH OF MAXIMUM SPAN 24 1 M
(49) STRUCTURE LENGTH 59 1 M
(50) CURB OR SIDEWALK LEFT 1 5 M RIGHT 3 M
(51) BRIDGE ROADWAY WIDTH CURB TO CURB 10 7 M
(52) DECK WIDTH OUT TO OUT 13 1 M
(32) APPROACH ROADWAY WIDTH (W/SHOULDERS) 10 7 M
(33) BRIDGE MEDIAN NO MEDIAN 0
(34) SKEW 27 DEG (35) STRUCTURE FLARED NO
(10) INVENTORY ROUTE MIN VERT CLEAR 99 99 M
(47) INVENTORY ROUTE TOTAL HORIZ CLEAR 10 7 M
(53) MIN VERT CLEAR OVER BRIDGE RDWY 99 99 M
(54) MIN VERT UNDERCLEAR REF - NOT H/RR 0 M
(55) MIN LAT UNDERCLEAR RT REF - NOT H/RR 0 M
(56) MIN LAT UNDERCLEAR LT 0 M

********** NAVIGATION DATA *** **********

(38) NAVIGATION CONTROL - NOT APPLICABLE CODE N
(111) PIER PROTECTION - NOT REQUIRED CODE 1
(39) NAVIGATION VERTICAL CLEARANCE 0 M
(116) VERT LIFT BRIDGE NAV MIN VERT CLEAR 0 M
(40) NAVIGATION HORIZONTAL CLEARANCE 0

********** **********

SUFFICIENCY RATING = 96 7
STATUS =
HEALTH INDEX = 100

********** CLASSIFICATION ********** CODE

(112) NBIS BRIDGE LENGTH YES Y
(104) HIGHWAY SYSTEM - NOT ON NHS 0
(26) FUNCTIONAL CLASS MINOR ARTERIAL URBAN 16
(100) DEFENSE HIGHWAY NOT STRAHNET 0
(101) PARALLEL STRUCTURE LEFT STRUCTURE L
(102) DIRECTION OF TRAFFIC 1 WAY 1
(103) TEMPORARY STRUCTURE
(105) FEDERAL LANDS HIGHWAY NOT APPLICABLE 0
(110) DESIGNATED NATIONAL NETWORK - NOT ON NET 0
(20) TOLL - ON FREE ROAD 3
(21) MAINTAIN - CITY OR MUNICIPAL HIGHWAY AGENCY 4
(22) OWNER - CITY OR MUNICIPAL HIGHWAY AGENCY 4
(37) HISTORICAL SIGNIFICANCE NOT ELIGIBLE 5

********** ****** CONDITION ********* ********* CODE

(58) DECK 7
(59) SUPERSTRUCTURE 8
(60) SUBSTRUCTURE 7
(61) CHANNEL & CHANNEL PROTECTION 8
(62) CULVERTS N

** ********* LOAD RATING AND POSTING ********** CODE

(31) DESIGN LOAD MS 18 OR HS - 20 5
(63) OPERATING RATING METHOD LOAD FACTOR 1
(64) OPERATING RATING 99 9
(65) INVENTORY RATING METHOD LOAD FACTOR 1
(66) INVENTORY RATING 32 6
(70 BRIDGE POSTING Equal to or above legal loads 5
(41) STRUCTURE OPEN POSTED OR CLOSED A
DESCRIPTION OPEN NO RESTRICTION

****** ********** APPRAISAL ******* ********** CODE

(67) STRUCTURAL EVALUATION 7
(68) DECK GEOMETRY 5
(69) UNDERCLEARANCES VERTICAL & HORIZONTAL N
(71) WATER ADEQUACY 9
(72) APPROACH ROADWAY ALIGNMENT 8
(36) TRAFFIC SAFETY FEATURES 1000
(113) SCOUR CRITICAL BRIDGES 8

******* ****** * PROPOSED IMPROVEMENTS **********

(75) TYPE OF WORK - CODE
(76) LENGTH OF STRUCTURE IMPROVEMENT M
(94) BRIDGE IMPROVEMENT COST
(95) ROADWAY IMPROVEMENT COST
(96) TOTAL PROJECT COST
(97) YEAR OF IMPROVEMENT COST ESTIMATE
(114) FUTURE ADT 3500
(115) YEAR OF FUTURE ADT 2010

******* ********** INSPECTIONS **********

(90) INSPECTION DATE 07/01 (91) FREQUENCY 24 MO
(92) CRITICAL FEATURE INSPECTION (93) CFI DATE
A) FRACTURE CRIT DETAIL - NO -1 MO A)
B) UNDERWATER INSP NO -1 MO B)
C) OTHER SPECIAL INSP NO -1 MO C)

Printed on 28-SEP-2001 07 42 44 AM

ClibPDF - www.fastio.com

DEPARTMENT OF TRANSPORTATION
Structure Maintenance & Investigations

Bridge Number : 55C0529R
Facility Carried: E/B LGNA HILLS DR
Location : 400' E/O MOULTON PKWY
City :
Inspection Date : 16-JUL-01

Inspection Type

Routine	Group A	Underwater	Special	Other
X				

Bridge Inspection Report

Name : ALISO CREEK

CONSTRUCTION INFORMATION

Year Built : 1985
Year Widened : N/A
Length (m) : 59.1

Skew (degrees): 27
No. of Joints : 0
No. of Hinges : 0

Description of Structure : Continuous 3-span CIP/PS concrete box girder (6 cells) with RC 2-column bents and RC open end diaphragm abutments, all supported upon steel piles.

Span Configuration : (W) 16.2 m, 24.1 m, 17.4 m (E) c/c

LOAD CAPACITY AND RATINGS

Design Live Load : MS - 18 OR HS - 20
Inventory Rating : 32.6 metric tons Calculation Method : LOAD FACTOR
Operating Rating : 99.9 metric tons Calculation Method : LOAD FACTOR
Permit Rating : PPPPP
Posting Load : Type 3 N/A english tons Type 3S2 N/A english tons Type 3-3 N/A english tons

DESCRIPTION ON STRUCTURE

Bridge width : (S) 0.3 m br, 1.5 m sw, 10.7 m, 0.3 m cu, 0.3 m br (N)
Total Width : 13.1 m Net Width : 10.70 m No. of Lanes : 2
Rail Description : Concrete Rail Code : 1000
Min. Vertical Clearance : Unimpaired

DESCRIPTION UNDER STRUCTURE

Channel Description : Natural earth trapezoidal with grouted rock slopes thru the site.

CONDITION OF STRUCTURE

The structure is in good condition.

SCOUR

Approximately 0.3 m of the pile cap for the westerly abutment is exposed at various locations. Water from the weep holes is eroding the uncompacted soil.

MISCELLANEOUS

Vehicular parking is at the northeast quadrant.

ELEMENT LEVEL INSPECTION RATINGS

F#	Elem No.	Element Description	Env	Total Quantity	Units	Qty in each Condition State St. 1	St. 2	St. 3	St. 4	St. 5
01	12	Concrete Deck - Bare	2	610	sq.m.	610	0	0	0	0
01	104	P/S Conc Closed Web/Box Girder	2	59	m.	59	0	0	0	0
01	205	Reinforced Conc Column or Pile Extension	2	4	ea.	4	0	0	0	0
01	210	Reinforced Conc Pier Wall	2	30	m.	30	0	0	0	0
01	215	Reinforced Conc Abutment	2	30	m.	30	0	0	0	0
01	225	Unpainted Steel Submerged Pile	2	64	ea.	64	0	0	0	0
01	302	Compression Joint Seal	2	28	m.	28	0	0	0	0
01	331	Reinforced Conc Bridge Railing	2	142	m.	142	0	0	0	0

WORK RECOMMENDATIONS - NONE

Printed on : 18-JUL-2001 08:52:58 AM

ClibPDF - www.fastio.com

Bridge No.: 55C0529R Location: 400' E/O MOULTON PKWY Inspection Date: 16-JUL-01

Inspected By : M. Ogata

M. Ogata

Registered Civil Engineer

REGISTERED PROFESSIONAL ENGINEER
MAKOTO OGATA
No. C23989
Exp. 12-31-01
CIVIL
STATE OF CALIFORNIA

CC : TMRut
Orange County

Printed on : 18-JUL-2001 08:52:58 AM

ClibPDF - www.fastio.com

Bridge No.: 55C0529R Location: 400' E/O MOULTON PKWY Inspection Date: 16-JUL-01

STRUCTURE INVENTORY AND APPRAISAL REPORT

********** IDENTIFICATION **********

(1) STATE NAME - CALIFORNIA 069
(8) STRUCTURE NUMBER 55C0529R
(5) INVENTORY ROUTE(ON/UNDER) - ON 1 40 0M274N
(2) HIGHWAY AGENCY DISTRICT 12
(3) COUNTY CODE 059 (4) PLACE CODE 00000
(6) FEATURE INTERSECTED - ALISO CREEK
(7) FACILITY CARRIED - E/B LGNA HILLS DR
(9) LOCATION - 400' E/O MOULTON PKWY
(11) MILEPOINT/KILOMETERPOINT 0
(12) BASE HIGHWAY NETWORK - NOT ON NET 0
(13) LRS INVENTORY ROUTE & SUBROUTE
(16) LATITUDE 33 DEG 35 MIN 34 SEC
(17) LONGITUDE 117 DEG 42 MIN 43 SEC
(98) BORDER BRIDGE STATE CODE % SHARE %
(99) BORDER BRIDGE STRUCTURE NUMBER

********** STRUCTURE TYPE AND MATERIAL **********

(43) STRUCTURE TYPE MAIN: MATERIAL - PRSTR CONC CONT
TYPE - BOX BEAM OR GDR - MULTIPLE CODE 6 05
(44) STRUCTURE TYPE APPR: MATERIAL -
TYPE - CODE
(45) NUMBER OF SPANS IN MAIN UNIT 3
(46) NUMBER OF APPROACH SPANS 0
(107) DECK STRUCTURE TYPE CIP CONCRETE CODE 1
(108) WEARING SURFACE / PROTECTIVE SYSTEM:
A) TYPE OF WEARING SURFACE - CONCRETE CODE 1
B) TYPE OF MEMBRANE - NONE CODE 0
C) TYPE OF DECK PROTECTION - NONE CODE 0

********** AGE AND SERVICE **********

(27) YEAR BUILT 1985
(106) YEAR RECONSTRUCTED 0000
(42) TYPE OF SERVICE: ON - HIGHWAY-PEDESTRIAN 5
UNDER - WATERWAY 5
(28) LANES: ON STRUCTURE 02 UNDER STRUCTURE
(29) AVERAGE DAILY TRAFFIC 3000
(30) YEAR OF ADT 1998 (109) TRUCK ADT 1%
(19) BYPASS, DETOUR LENGTH 2 KM

********** GEOMETRIC DATA **********

(48) LENGTH OF MAXIMUM SPAN 24.1 M
(49) STRUCTURE LENGTH 59.1 M
(50) CURB OR SIDEWALK: LEFT 1.5 M RIGHT .3 M
(51) BRIDGE ROADWAY WIDTH CURB TO CURB 10.7 M
(52) DECK WIDTH OUT TO OUT 13.1 M
(32) APPROACH ROADWAY WIDTH (W/SHOULDERS) 10.7 M
(33) BRIDGE MEDIAN - NO MEDIAN 0
(34) SKEW 27 DEG (35) STRUCTURE FLARED NO
(10) INVENTORY ROUTE MIN VERT CLEAR 99.99 M
(47) INVENTORY ROUTE TOTAL HORIZ CLEAR 10.7 M
(53) MIN VERT CLEAR OVER BRIDGE RDWY 99.99 M
(54) MIN VERT UNDERCLEAR REF - NOT H/RR 0 M
(55) MIN LAT UNDERCLEAR RT REF - NOT H/RR 0 M
(56) MIN LAT UNDERCLEAR LT 0 M

********** NAVIGATION DATA **********

(38) NAVIGATION CONTROL - NOT APPLICABLE CODE N
(111) PIER PROTECTION - NOT REQUIRED CODE 1
(39) NAVIGATION VERTICAL CLEARANCE 0 M
(116) VERT-LIFT BRIDGE NAV MIN VERT CLEAR 0 M
(40) NAVIGATION HORIZONTAL CLEARANCE 0

****

SUFFICIENCY RATING = 96.7

STATUS =

HEALTH INDEX = 100

********** CLASSIFICATION ********** CODE

(112) NBIS BRIDGE LENGTH - YES Y
(104) HIGHWAY SYSTEM - NOT ON NHS 0
(26) FUNCTIONAL CLASS - MINOR ARTERIAL URBAN 16
(100) DEFENSE HIGHWAY - NOT STRAHNET 0
(101) PARALLEL STRUCTURE - LEFT STRUCTURE L
(102) DIRECTION OF TRAFFIC - 1 WAY 1
(103) TEMPORARY STRUCTURE -
(105) FEDERAL LANDS HIGHWAY - NOT APPLICABLE 0
(110) DESIGNATED NATIONAL NETWORK - NOT ON NET 0
(20) TOLL - ON FREE ROAD 3
(21) MAINTAIN - COUNTY HIGHWAY AGENCY 2
(22) OWNER - COUNTY HIGHWAY AGENCY 2
(37) HISTORICAL SIGNIFICANCE - NOT ELIGIBLE 5

********** CONDITION ********** CODE

(58) DECK 7
(59) SUPERSTRUCTURE 8
(60) SUBSTRUCTURE 7
(61) CHANNEL & CHANNEL PROTECTION 8
(62) CULVERTS N

********** LOAD RATING AND POSTING ********** CODE

(31) DESIGN LOAD - MS - 18 OR HS - 20 5
(63) OPERATING RATING METHOD - LOAD FACTOR 1
(64) OPERATING RATING - 99.9
(65) INVENTORY RATING METHOD - LOAD FACTOR 1
(66) INVENTORY RATING - 32.6
(70) BRIDGE POSTING - Equal to or above legal loads 5
(41) STRUCTURE OPEN, POSTED OR CLOSED - A
DESCRIPTION - OPEN, NO RESTRICTION

********** APPRAISAL ********** CODE

(67) STRUCTURAL EVALUATION 7
(68) DECK GEOMETRY 5
(69) UNDERCLEARANCES, VERTICAL & HORIZONTAL N
(71) WATER ADEQUACY 9
(72) APPROACH ROADWAY ALIGNMENT 8
(36) TRAFFIC SAFETY FEATURES 1000
(113) SCOUR CRITICAL BRIDGES 6

********** PROPOSED IMPROVEMENTS **********

(75) TYPE OF WORK - CODE
(76) LENGTH OF STRUCTURE IMPROVEMENT M
(94) BRIDGE IMPROVEMENT COST
(95) ROADWAY IMPROVEMENT COST
(96) TOTAL PROJECT COST
(97) YEAR OF IMPROVEMENT COST ESTIMATE
(114) FUTURE ADT 3500
(115) YEAR OF FUTURE ADT 2010

********** INSPECTIONS **********

(90) INSPECTION DATE 07/01 (91) FREQUENCY 24 MO
(92) CRITICAL FEATURE INSPECTION: (93) CFI DATE
A) FRACTURE CRIT DETAIL - NO -1 MO A)
B) UNDERWATER INSP - NO -1 MO B)
C) OTHER SPECIAL INSP - NO -1 MO C)

Printed on : 18-JUL-2001 08:52:58 AM

ClibPDF - www.fastio.com

STATE OF CALIFORNIA
DEPARTMENT OF TRANSPORTATION
DIVISION OF STRUCTURES

SUPPLEMENTARY BRIDGE REPORT

DS-M19 (REV. 2/93)

Bridge Number 55C-529 R

Location 12 - Ora - FAU M274-CR
Dist.-Co.-Rte.-City

Date of Investigation August 1, 1996

TYPE OF INVESTIGATION/REPORT			
BIENNIAL	X	DAMAGE	
CATEGORY A		OTHER	
UNDERWATER		OFFICE	

Name **ALISO CREEK (Laguna Hills Drive eastbound, 400' east of Moulton Parkway)**

CONDITION RATINGS:
Element Level Inspection (ELI) form attached.

Channel & Channel Protection
8

CONDITION OF STRUCTURE:

A. Concrete deck has light longitudinal cracks in its entirety.

B. Concrete shear key of east abutment has spalled.

WORK RECOMMENDED:

Repair spall in concrete shear key of the east abutment.

M. Hadi Behrooj MHB

By G. P. Balinghasay

G. P. Balinghasay

REGISTERED PROFESSIONAL ENGINEER
MOHAMMAD HADI BEHROOJ
No. C 41777
MAR 3 1 2000
CIVIL
STATE OF CALIFORNIA

GPB:cd
cc: TMRut
Orange County

ClibPDF - www.fastio.com

ELEMENT LEVEL INSPECTION-(ELI)

BRIDGE NUMBER	FRAME	INSPECTION DATE
55C0529R	01	080196
1 8	9	11 16

INFORMATION ONLY - NOT FOR UPDATE

SCOUR CRITICAL..... NO
GROUP A INVESTIGATION..... NO
FRACTURE CRITICAL..... NO
ELIGIBLE FOR RAIL UPGRADE.. NO
UNDERWATER INVESTIGATION... NO

DISTRICT 12
COUNTY ORA
ROUTE
POSTMILE
NAME

DEL	ELE #	ELEMENT DESCRIPTION	ENV	TOTAL QUANTITY	UNITS	QUANT CONDITION STATE 1	QUANT CONDITION STATE 2	QUANT CONDITION STATE 3	QUANT CONDITION STATE 4	QUANT CONDITION STATE 5
	12	CONCRETE DECK - BARE	2	1	EA	1				
	104	P/S CONCRETE CLOSED WEB/BOX GIRDER	2	59	M	59				
	205	REINFORCED CONCRETE COLUMN OR PILE EXTENSION	2	4	EA	4				
	210	REINFORCED CONCRETE PIER WALL	2	29	M	29				
	215	REINFORCED CONCRETE ABUTMENT	2	29	M	29				
	225	UNPAINTED STEEL SUBMERGED PILE	2	64	EA	X				
	302	COMPRESSION JOINT SEAL	2	29	M	29				
	333	MISCELLANEOUS BRIDGE RAILING	2	143	M	143				
18	19		22	23		28	33	38	43	48

BY:

08/12/96 55C SHAWN ZANGANEH

ClibPDF - www.fastio.com

STATE OF CALIFORNIA
DEPARTMENT OF TRANSPORTATION
DIVISION OF STRUCTURES

SUPPLEMENTARY BRIDGE REPORT

DS-M19 (REV. 2/93)

Bridge Number 55C-529 R

Location 12 - Ora - FAU M274-CR
Dist.-Co.-Rte.-City

Date of Investigation June 29, 1994

TYPE OF INVESTIGATION/REPORT			
BIENNIAL	X	DAMAGE	
CATEGORY A		OTHER	
UNDERWATER		OFFICE	

Name ALISO CREEK (Laguna Hills Drive eastbound, 400' east of Moulton Parkway)

CONDITION RATINGS:
Condition ratings of all bridge elements are shown on the PONTIS DATA FORM (Attachment A).

Channel & Channel Protection
(8)

SCOUR CRITICAL:

The scour rating of A-2 is appropriate.

CONDITION OF STRUCTURE:

There is light random cracks in various locations of concrete bridge deck. Otherwise the structure is in good condition.

WORK RECOMMENDED:

None.

M. H. Behrooj

By S. A. Zanganeh
S. A. Zanganeh

SAZ:cd
cc: CDHarris
Orange County
WLindsey

ClibPDF - www.fastio.com

STATE OF CALIFORNIA - DEPARTMENT OF TRANSPORTATION

(ATTACHMENT A)

PONTIS DATA FORM - PIA

BRIDGE NUMBER	FRAME	INSPECTION DATE
55C0529R	01	062994
1 – 8	9	11 – 16

INFORMATION ONLY - NOT FOR UPDATE

SCOUR CRITICAL	NO
CATEGORY A	NO
FRACTURE CRITICAL	NO
ELIGIBLE FOR RAIL UPGRADE	NO
UNDERWATER INSPECTION	NO

DISTRICT	12
COUNTY	ORA
ROUTE	
POSTMILE	
NAME	

DEL	ELE #	ELEMENT DESCRIPTION	ENV	TOTAL QUANTITY	UNITS	QUANT CONDITION STATE 1	QUANT CONDITION STATE 2	QUANT CONDITION STATE 3	QUANT CONDITION STATE 4	QUANT CONDITION STATE 5
	4	P/S CONCRETE CLOSED WEB/BOX GIRDER	2	59	M	59				
	47	REINFORCED CONCRETE COLUMN OR PILE EXTENSION	2	4	EA	4				
	51	CONCRETE ABUTMENT	2	29	M	29				
	104	MISCELLANEOUS BRIDGE RAILING	2	143	M	143				
	112	CONCRETE DECK - BARE	2	1	EA	1				
	200	DRIVEN STEEL FOUNDATION PILES	2	64	EA	X				
18	19		22	23		28	33	38	43	48

07/10/95

BY: S22

ClibPDF - www.fastio.com

STATE OF CALIFORNIA
DEPARTMENT OF TRANSPORTATION
DIVISION OF STRUCTURES

SUPPLEMENTARY BRIDGE REPORT

DS-M19 (REV. 12/91)

Bridge Number 55C-529 R

Location 12-Ora-FAU M274-CR
Dist.-Co.-Rte.-City

Date of Investigation June 10, 1992

TYPE OF INVESTIGATION/REPORT			
BIENNIAL	X	DAMAGE	
CATEGORY A		OTHER	
UNDERWATER		OFFICE	

Name ALISO CREEK (Laguna Hills Drive eastbound, 400' east of Moulton Parkway)

CONDITION RATINGS:

Deck	Superstructure	Substructure	Channel & Channel Protection	Culvert
8	8	8	(8)	N

CONDITION OF STRUCTURE:

Condition of the structure is good.

REVISIONS:

Condition Rating: Channel & Channel Protection - 8

(There is no deterioration in condition of channel banks from the previous report, the above rating change indicates the nature of the earth channel slopes to reflect more closely to the current Federal Coding Guide.)

Henry Ma

REGISTERED PROFESSIONAL ENGINEER
HENRY MA
No. C-36817
Exp. 6-30-96
CIVIL
STATE OF CALIFORNIA

HM:cd
cc: INagai (2)
County of Orange

ClibPDF - www.fastio.com

STATE OF CALIFORNIA
DEPARTMENT OF TRANSPORTATION

BRIDGE REPORT 14W23

DS-M58 (REV. 4/90)

Bridge No. 55C - 529 R

Location 12 - Ora - FAU M274-CR
Dist Co Rte City

REVISED ORIGINAL REPORT

Date of Investigation May 22, 1990

Name ALISO CREEK (Laguna Hills Drive eastbound, 400' east of Moulton Parkway)

Lat. 33°-35.4'N **Long.** 117°-42.7'W

Custodian County of Orange **Owner** County of Orange

STRUCTURAL DATA AND HISTORY

Year Built 1985 **By** Orange County **Contract No.** Unknown

Designed by: Jack G. Raub Company **Plans Avail. @** DOS

Description: 3 span continuous CIP PS concrete box girder (5 cells) supported by RC column (2 each) bents (RC channel wall between columns) and open end RC diaphragm abutments, all on steel piles.

Spans (W) 53'; 79'; 57' (E)

Length 194' **NBIS Bridge Length** Yes **Skew** 27°± Right

Number Of Intermediate Joints: **@Hinges** N **@Bents** N

Maximum Column/Pier Height: **(Less than 20')** X **(20'-29')** **(30' & Over)**

Design Live Load HS20-44 & P-13 **Design Method** Unknown

DESCRIPTION - ON STRUCTURE

Bridge Width (S) 1'br; 5'sw; 35'; 1'cu; 1'br (N)

Total Width 43' **Net Width** 35' **Lanes** 2 **Tracks** None

Median None **Rail Type** Concrete parapet with timber beam [1000]

Vert. Clearance over deck Unimpaired **Appr. Rdwy. Width** 35'

Deck Type [1] **Wearing Surface/Prot. Sys.** [100] Concrete/None

Alignment R = 1800'

DESCRIPTION - UNDER STRUCTURE

Roadway Section None

Clearances: **Road:** **Vert.** **Horiz.Lt.** ; **Rt.**

Lanes **Tracks**

Facilities Crossed Aliso Creek (J01)

ClibPDF - www.fastio.com

Bridge No. 55C - 529 R
May 22, 1990

DESCRIPTION - HYDRAULICS

Channel Earth trapezoidal

Navigable: Yes [ ] **No** [X] **Clearances: Vert.** **Horiz.**

Pier/Abutment Protection (For Navigation) [ ]

TRAFFIC INFORMATION	**DECK**	**YEAR**	**UNDER**	**YEAR**
Average Daily Traffic & Year :	3,000	1989	N	
Average Daily Traffic (Future) :	3,500 Est	2010	N	
Average Daily Trucks (% OF ADT) :	1% Est		N	
Bypass Detour Length	1 mile		N	
Shell Route:	No		N	
Functional Classification :	14		N	

LOAD RATINGS: **Inventory** HS 20 **Operating** HS 74

Permit PPPPP **Computation Method** Load Factor

CONDITION RATINGS:

Deck 8 **Superstructure** 8 **Substructure** 8

Channel & Channel Protection 9 **Culvert** N **Widenable** Yes

APPRAISAL RATINGS:

Waterway Adequacy 9 **Approach Roadway Alignment** 8

Date of Revisions

CONDITION OF STRUCTURE:

Condition of the structure is good.

Henry Ma

REGISTERED PROFESSIONAL ENGINEER
HENRY MA
No. C-36817
Exp. 6-30-92
CIVIL
STATE OF CALIFORNIA

HM:ms
cc: INagai (2)
County of Orange

ClibPDF - www.fastio.com

STATE OF CALIFORNIA
DEPARTMENT OF TRANSPORTATION
SUPPLEMENTARY BRIDGE REPORT
DS-M19 (REV. 2/75)

Bridge No. 55C-529 R

Location 7-Ora-FAU M274-CR
Dist - Co - Rte - PM - City

Date of Investigation May 18, 1988

Name ALISO CREEK (Laguna Hills Drive eastbound, 400' east of Moulton Parkway)

CONDITION RATING: **APPRAISAL RATING:**

Deck 8 **Superstructure** 8 **Substr. & Pipes** 8 **Overall** 8

Channel & Channel Protection 7 **Retaining Walls** N

Widenable? Yes ☒ No ☐ Conditional ☐

Action Required by COUNTY Yes ☐ No ☒

REVISION:

Name: ALISO CREEK (Laguna Hills Drive eastbound, 400' east of Moulton Parkway)

Approach Roadway Width: 35'

CONDITION OF STRUCTURE:

The structure is in good condition.

RECOMMENDED POSTING:

None

WORK RECOMMENDED:

None

Henry Ma

REGISTERED PROFESSIONAL ENGINEER
HENRY MA
No. C-36817
Exp. 6-30-88
CIVIL
STATE OF CALIFORNIA

HM/pht
cc: INagai (2)
Orange County (2)

ClibPDF - www.fastio.com

DIST	ROUTE	COUNTY	STRU. NO	POSTMILE	RATING WIDTH-FT	STRU TYPE	YR ORIG CONST	
07	CO RD	55 C	0529R	.	043.0	CGB Q	85	JUL. 14, 1986

	RATING FACTOR	PT	SPAN	ULT MOM CAP TOP IN COM	ULT MOM CAP BOT IN COM	POS HS20 MOMENT	NEG HS20 MOMENT	POS PURP MOMENT	NEG PURP MOMENT	DEAD LOAD MOMENT	SECONDARY MOMENT
INV	1.00	5	2	19211.0	0.0	2485.5	-469.7	4226.2	-615.5	2886.0	2494.1
OPER	3.73	5	2	19211.0	0.0	2485.5	-469.7	4226.2	-615.5	2886.0	2494.1
PURP	1.62	10	2	0.0	14741.8	330.4	-2013.0	514.1	-5001.0	-4485.0	2527.6

THE NUMBER OF AXLES ON THE TRUCK THAT CAUSES THE PURPLE RATING FACTOR IS 13.
FC = 0.0 FY = 0.
FS = 270. FPC = 4.00
PS PHI= 0.97

THE INVENTORY RATING POINT WAS SET BY PS CRITERIA

IF THE REPORTED ULTIMATE MOMENT CAPACITY IS 0, IT WAS DETERMINED NOT TO BE CRITICAL

2 ALISO CREEK - SOUTH BRIDGE (SHEEP HILLS ROAD)
3 CONT 3 SPAN CIP P/S BOX GIRDER W/NO ACWS

PPPPP

ClibPDF - www.fastio.com

DIST	ROUTE	COUNTY	STRU. NO	POSTMILE	RATING WIDTH-FT	STRU TYPE	YR ORIG CONST	
07	CO RD	55 C	0529R	.	043.0	CGB Q	85	JUL. 14, 1986

INFLUENCE LINE FOR CRITICAL INVENTORY RATING POINT SPAN 2 10TH POINT 5

MEM NO	LEFT	.1	.2	.3	.4	.5	.6	.7	.8	.9	RIGHT
1	0.0	-0.361	-0.700	-0.996	-1.225	-1.366	-1.398	-1.298	-1.044	-0.615	0.0
2	0.0	1.315	3.207	5.685	8.751	12.400	8.763	5.708	3.232	1.335	0.0
3	0.0	-0.673	-1.142	-1.419	-1.528	-1.493	-1.338	-1.088	-0.765	-0.395	0.0

THE CRITICAL OPERATING RATING POINT IS THE SAME AS THE CRITICAL INVENTORY RATING POINT

INFLUENCE LINE FOR CRITICAL PURPLE RATING POINT SPAN 2 10TH POINT 10

1	0.0	0.346	0.671	0.954	1.174	1.309	1.340	1.244	1.001	0.590	0.0
2	0.0	-1.225	-2.778	-4.440	-5.983	-7.179	-7.799	-7.615	-6.399	-3.922	0.0
3	0.0	-2.009	-3.406	-4.233	-4.558	-4.454	-3.993	-3.245	-2.282	-1.177	0.0

2 ALISO CREEK - SOUTH BRIDGE (SHEEP HILLS ROAD)
3 CONT 3 SPAN CIP P/S BOX GIRDER W/NO ACWS

ClibPDF - www.fastio.com

STATE OF CALIFORNIA
DEPARTMENT OF TRANSPORTATION
BRIDGE REPORT
DS-M58 (REV. 1/81)

Bridge No. 55C-529 R (E/B Rdwy)

Other No.

P.U.C. No.

SEE REVISED ORIGINAL REPORT

Location 7-Ora-FAU M274-CR
Dist - Co - Rte - PM - City

Date of Investigation June 18, 1986

Name ALISO CREEK (Sheep Hills Road, 400' east of Moulton Parkway)

Lat. 33°-35.4'N Long. 117°-42.7'W

STRUCTURAL DATA AND HISTORY

Year Built 1985 By Orange County Contract No. Unknown

Date of Revisions

Designed by: B.D. [ ] Jack G. Raub Company Plans Avail. @ B.D.

Description: 3 span continuous CIP/PS concrete box girder (5 cells) on column (2) bents and diaphragm abutments all supported by steel piles. RC channel debris pier walls between columns.

Spans 1 @ 53', 1 @ 79', 1 @ 57'

Length 194' Skew 27±° Rt. Design LL HS20-44 & P-13

Ratings: Inventory HS20/LF Operating HS 74.6/LF Permit PPPPP/LF

DESCRIPTION – ON STRUCTURE (Shell Rte.: Yes [ ] No [X])

Bridge Width (S) 1'br, 5'sw, 35', 1'cu, 1'br (N)

Total Width 43' Lanes 2 Tracks 0

Median None Rail Type Concrete parapet and timber(1000)

Vert. Clearance over deck Unimpaired Appr. Rdwy. Width 82'

Wearing Surface None Deck Prot. Sys. None

Alignment R= 1800'

DESCRIPTION – UNDER STRUCTURE (Shell Rte.: Yes [ ] No [X])

Roadway Section None

Clearances: Vert. Horiz.; Lt. Rt.

Lanes Tracks Pumpplant: None [X] See Br. No.

Facilities Crossed Aliso Creek

cc:

ClibPDF - www.fastio.com

DESCRIPTION – HYDRAULICS

Channel Unimproved natural sand and gravel trapezoidal

Navigable: Yes [ ] No [x] **Clearances:** Vert. _____ Horiz. _____

MAINTENANCE

Custodian Orange County **Owner** Orange County

ORIGINAL CONDITION RATING		ORIGINAL APPRAISAL		
Deck	8	Overall		8
Superstructure	8	Deck Geometry		8
Substructure & Pipes	8	Underclearances	Vert.	N
Channel & Channel Protection	7		Horiz.	N
Retaining Walls	N	Safe Load Capacity		9
Approach Rdwy. Alignment	7	Waterway Adequacy		7
Estimated Remaining Life	50	Approach Rdwy. Alignment		7

Widenable? Yes [X] **No** [ ] **Conditional** [ ]

Average Daily Traffic & Year 500 (Est. 1986)

Bypass Detour Length 1 mile

Action Required: Yes [ ] No [X]

Posting Required: None [X] Load [ ] Speed [ ]

Seismic Retrofit Not required

LOAC CAPACITY: The inventory, operating and permit ratings shown were obtained through the "Frame Rate" program using the load factor (LF) method of analysis

CONDITION OF STRUCTURE: The structure is new and in good condition.

WORK RECOMMENDED: None

Henry Ma
C-36817

HM:pht
cc: INagai (2)
Orange County (2)

ClibPDF - www.fastio.com

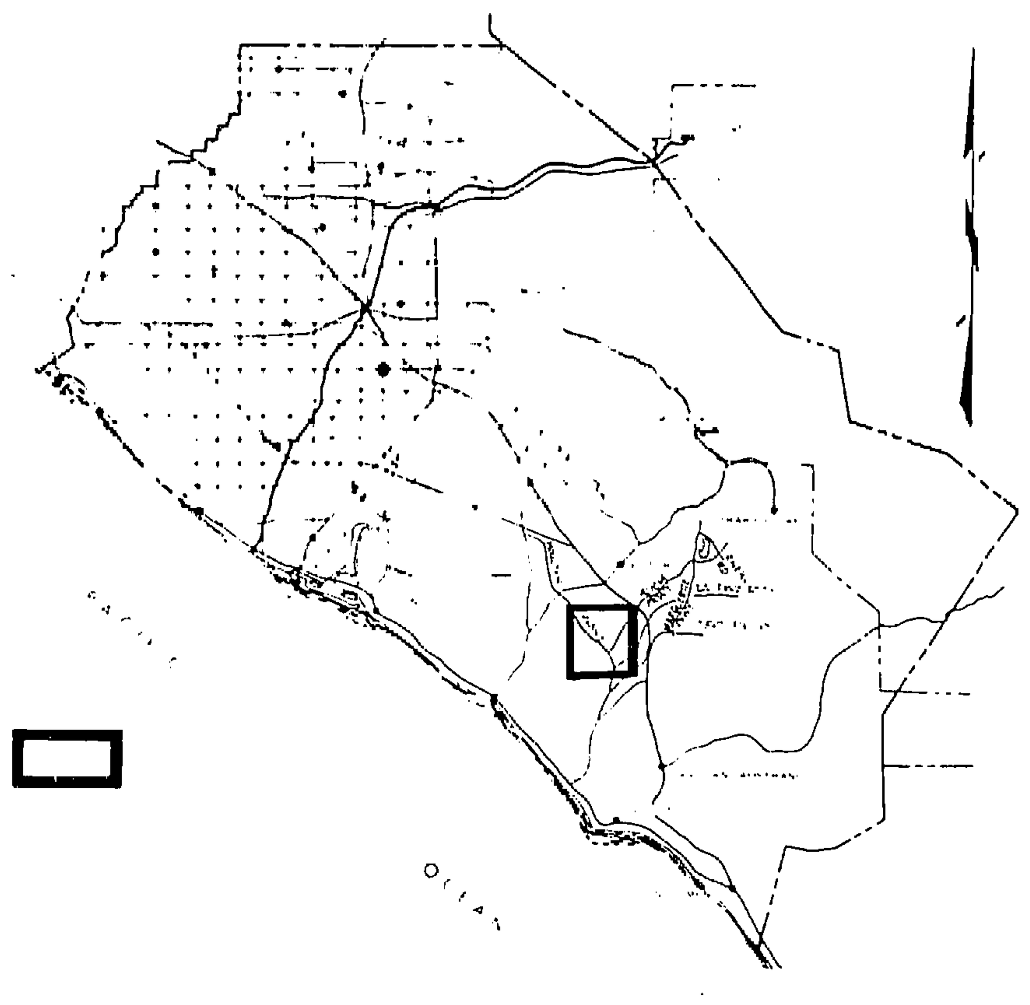

VICINITY MAP

ORANGE COUNTY
ENVIRONMENTAL MANAGEMENT AGENCY

SANTA ANA, CALIFORNIA

M. STORM, DIRECTOR

PLANS FOR CONSTRUCTION OF

SHEEP HILLS ROAD BRIDGE

(SOUTH BRIDGE)

ACROSS ALISO CREEK
(CHANNEL NO. J01)

CONSTRUCTED AS PART OF TRACT 11392

PREPARED FOR MISSION VIEJO COMPANY
26137 LA PAZ ROAD • MISSION VIEJO, CALIF. 92691
714-837-6050

70 TON BENT PILE

INDEX OF SHEETS

SHEET	DESCRIPTION
1.	TITLE SHEET
2.	STREET IMPROVEMENT PLAN
3.	TRAFFIC STRIPING AND SIGNING PLAN
4.	GENERAL PLAN
5.	ABUTMENT 1 - PLAN & ELEVATION
6.	ABUTMENT 4 - PLAN & ELEVATION
7.	ABUTMENT SECTIONS & DETAILS
8.	WINGWALLS SECTIONS & DETAILS
9.	PIER 2 - PLAN & ELEVATION
10.	PIER 3 - PLAN & ELEVATION
11.	PIER SECTIONS & DETAILS
12.	DEBRIS WALL & MASONRY SECTION
13.	TYPICAL SECTION, DECK REINFORCEMENT
14.	GIRDER LAYOUT & PROFILE
15.	MISCELLANEOUS DETAILS
16.	MISCELLANEOUS DETAILS
17.	BORING LOG

UTILITY	PHONE NO.
SOUTHERN CALIFORNIA EDISON CO	859-5243
SOUTHERN CALIFORNIA GAS CO	634-3122
PACIFIC BELL	966-6286
MOULTON NIGUEL WATER DISTRICT	643-2584
COUNTY OF ORANGE E. M. A.	834-3488
TRI-CITIES MUNICIPAL WATER DISTRICT	496-1377
UNDERGROUND SERVICE ALERT	800-422-4133

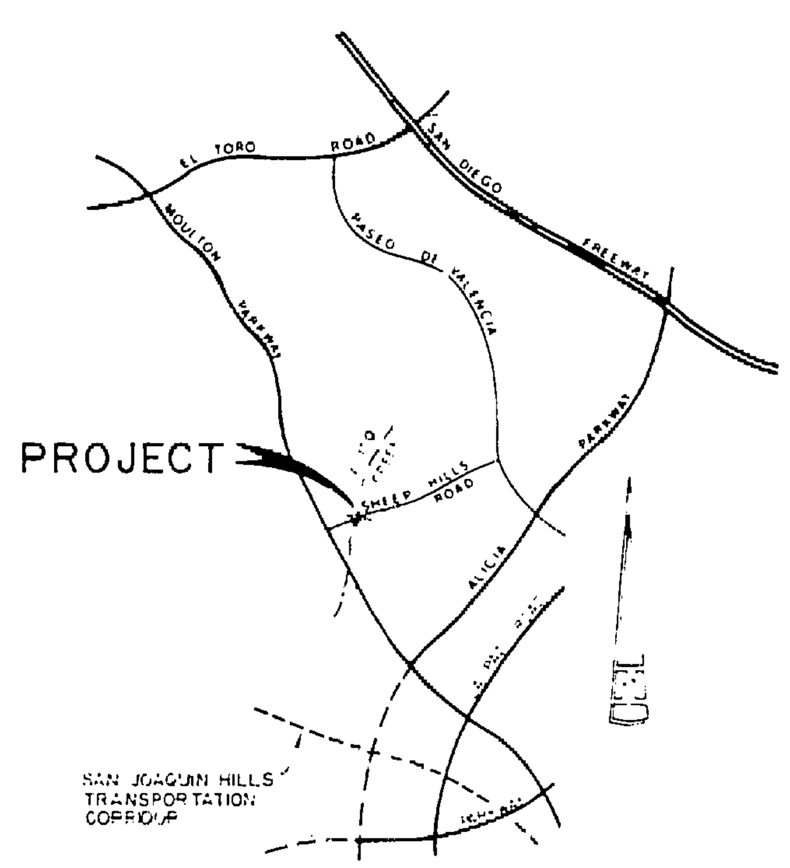

LOCATION MAP

ALL UNDERGROUND UTILITIES OR STRUCTURES REPORTED BY THE OWNER OR OTHERS, AND THOSE SHOWN ON THE RECORDS EXAMINED, ARE INDICATED WITH THEIR APPROXIMATE LOCATION AND EXTENT. THE OWNER, BY ACCEPTING THESE PLANS OR PROCEEDING WITH IMPROVEMENTS PURSUANT THERETO, AGREES TO ASSUME LIABILITY AND TO HOLD UNDERSIGNED HARMLESS FOR ANY DAMAGES RESULTING FROM THE EXISTENCE OF UNDERGROUND UTILITIES OR STRUCTURES NOT REPORTED TO THE UNDERSIGNED, NOT INDICATED ON THE PUBLIC RECORDS EXAMINED, LOCATED AT VARIANCE WITH THOSE REPORTED OR SHOWN ON RECORDS EXAMINED. THE CONTRACTOR IS REQUIRED TO TAKE DUE PRECAUTIONARY MEASURES TO PROTECT THE UTILITIES OR STRUCTURES SHOWN AND ANY OTHER UTILITIES OR STRUCTURES FOUND AT THE SITE. IT SHALL BE THE CONTRACTOR'S RESPONSIBILITY TO NOTIFY THE OWNERS OF THE UTILITIES OR STRUCTURES CONCERNED BEFORE STARTING WORK.

CONTRACTOR AGREES THAT HE SHALL ASSUME SOLE AND COMPLETE RESPONSIBILITY FOR JOB SITE CONDITIONS DURING THE COURSE OF CONSTRUCTION OF THIS PROJECT, INCLUDING SAFETY OF ALL PERSONS AND PROPERTY. THAT THIS REQUIREMENT SHALL APPLY CONTINUOUSLY AND NOT BE LIMITED TO NORMAL WORKING HOURS, AND THAT THE CONTRACTOR SHALL DEFEND, INDEMNIFY AND HOLD THE OWNER, THE CONSULTING ENGINEER, AND THE COUNTY OF ORANGE HARMLESS FROM ANY AND ALL LIABILITY, REAL OR ALLEGED, IN CONNECTION WITH THE PERFORMANCE OF WORK ON THIS PROJECT, EXCEPTING FOR LIABILITY ARISING FROM THE SOLE NEGLIGENCE OF THE OWNER, THE CONSULTING ENGINEER, OR THE COUNTY OF ORANGE.

55C-529 R/L

BENCH MARK 3X 28 70

O C S ALUMINUM CAP LOCATED NORTHWEST ALONG MOULTON PARKWAY FROM THE INTERSECTION OF LA PAZ ROAD TO THE CONCRETE BRIDGE (NO. AL-16 1968) CROSSING OF ALISO CREEK 13 FEET EAST OF THE CENTER LINE OF THE PARKWAY, 18 FEET SOUTHWEST OF POWER POLE NUMBER 1874920E IN THE NE PART OF THE BRIDGE, 15 FEET SOUTH OF THE NORTH END OF CONCRETE RETAINING WALL, 1 FOOT WEST OF THE EAST EDGE OF THE BRIDGE, 1 FOOT NORTH OF EXPANSION JOINT AND LEVEL WITH THE BRIDGE DECK. LEV 1970 - ADJ. 1970 ELE.279842

BASIS OF BEARING

THE BEARINGS SHOWN HEREON ARE BASED ON THE CENTERLINE OF MOULTON PARKWAY AS SHOWN ON THE TR 11392, MM 497/25-31 OF THE ORANGE COUNTY, CALIFORNIA BEING N 28° 14' 47" W

ENGINEER

Jack G. Raub Company
Engineering & Planning

EMA- REGULATION

APPROVED Douglas McCause 23796 RCE

DATE: 9-16-1985

THIS PLAN IS SIGNED BY E.M.A./ REGULATION FOR CONCEPT AND ADHERENCE TO COUNTY STANDARDS AND REQUIREMENTS ONLY. E.M.A./REGULATION IS NOT RESPONSIBLE FOR DESIGN, ASSUMPTIONS, OR ACCURACY.

NO.	DESCRIPTION	SHT.	APPROVED	DATE

REVISIONS

AL-15A

DWG. NO.

SHEET 1 OF 17

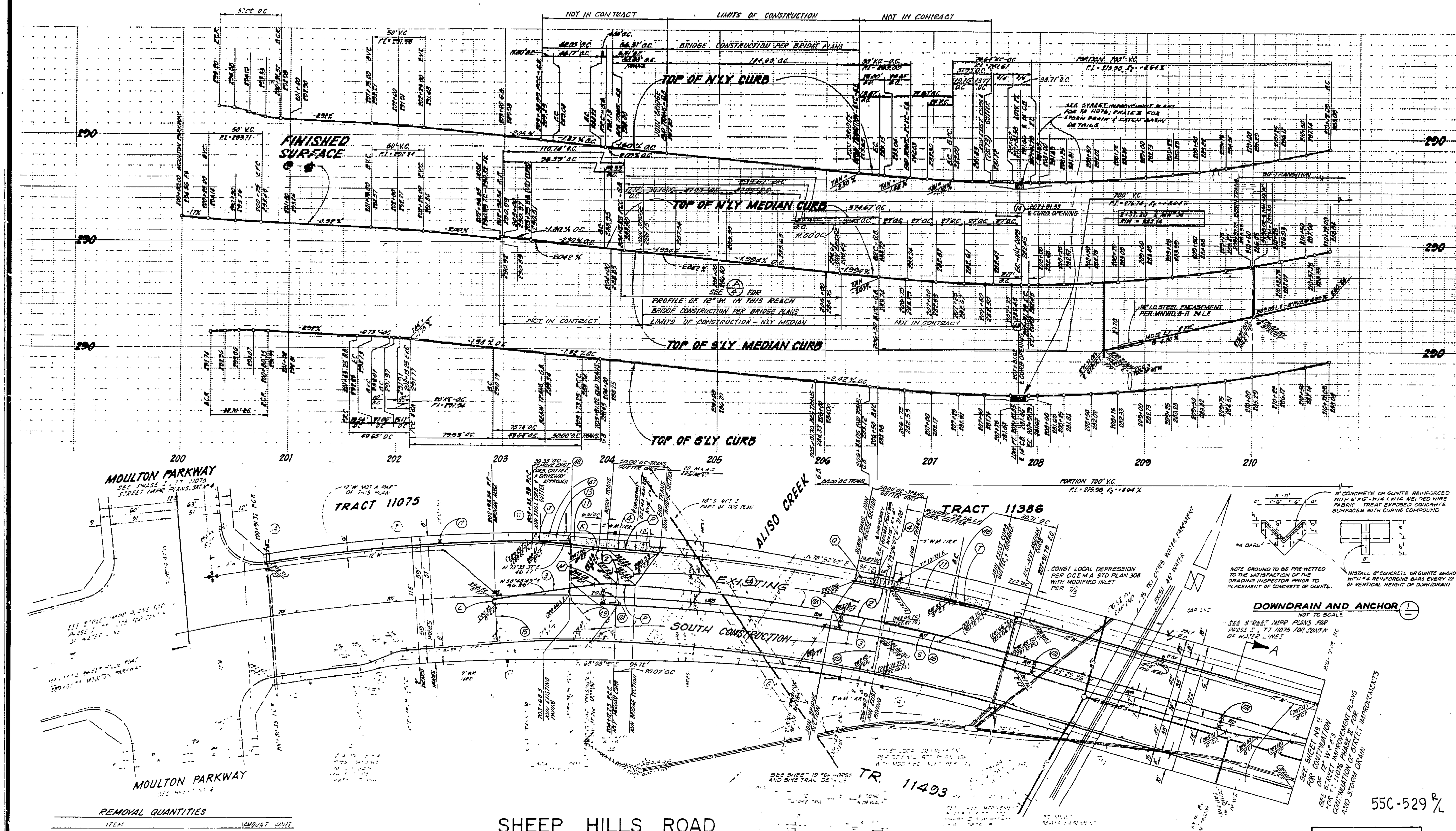

55C-529

SHEEP HILLS ROAD

REMOVAL QUANTITIES

ITEM	AMOUNT	UNIT
(47) — REMOVE EXIST CONC DRIVEWAY APPROACH	248	SF
(48) — REMOVE EXIST CONC CURB OR CURB & GUTTER	[illegible]	LF
(49) — [illegible]	[illegible]	LF

CONSTRUCTION NOTES

NO	DESCRIPTION
[illegible]	INSTALL STREET LIGHTS PER OCEMA STD PLAN NO [illegible] DOUBLE ST LIGHT
[illegible]	INSTALL STREET LIGHTS PER OCEMA STD PLAN NO 411 SINGLE ST LIGHT
[illegible]	[illegible]
[illegible]	[illegible] OCEMA STD PLAN [illegible]
(11)	CONST SIDEWALK PER OCEMA STD PLAN NO 205
(4)	CONST CURB & GUTTER TYPE 'A' 2' (8" CF) PER OCEMA STD PLAN NO 201
(3)	CONST CURB ONLY TYPE 'B' (8" CF) PER OCEMA STD PLAN NO 201
(2)	CONST AC/AB SC 250 PRIME COAT AND SEAL COAT

CURVE DATA

NO	Δ	R	L	T
I	17°18'39"	50.00	15.11'	7.61'
H	15°31'13"	50.00	13.54'	6.81'
G	14°59'16"	1558.00'	407.55	204.95'
F	5°43'47"	757.33'	75.74	37.90
E	4°23'29"	1000.00	76.63'	38.34
D	[illegible]	1832.00	[illegible]	130.75
C	2°58'[illegible]	[illegible]	85.[illegible]	[illegible]
B	[illegible]	1651.[illegible]	250.20	125.29
A	[illegible]	[illegible]	[illegible]	[illegible]

NO	Δ	R	L	T
T	[illegible]	1220.00	37.93'	18.97'
S	5°27'28"	1800.00	171.33'	85.78'
R	0°33'56"	1800.00'	17.77'	8.88'
Q	0°37'17"	1832.00	19.87'	9.93'
P	1°46'03"	1832.00	56.51'	28.26
O	11°55'36"	1800.00	374.67'	188.02'
N	17°40'15"	1593.00	491.59'	247.61'
M	11°00'20"	100.00'	19.35'	9.71'
L	72°50'22"	200	6.64'	92.65'
K	2°37'19"	[illegible]	4.55'	2.29'
J	6°28'30"	100.00'	[illegible]	3.66'

SECTION A-A
NOT TO SCALE

NOTE: FOR INFORMATION ONLY
(NOT IN CONTRACT)

Jack G. Raub Company
Engineering & Planning

DATE	BY	REVISION DESCRIPTION	APP'D	DATE

PROFILE SCALES
HORIZ. 1" = 40'
VERT. 1" = 4'
PLAN SCALE
1" = 40'

DES T.T. DWN R.H
CKD T.O. DATE 4/6/84

PLAN AND PROFILE FOR THE IMPROVEMENT OF
SHEEP HILLS ROAD
STA. 200+00.00 TO STA. 210+72.09
SHEEP HILLS ROAD BRIDGE
ACROSS ALISO CREEK

SHEET 2 OF 17
213040

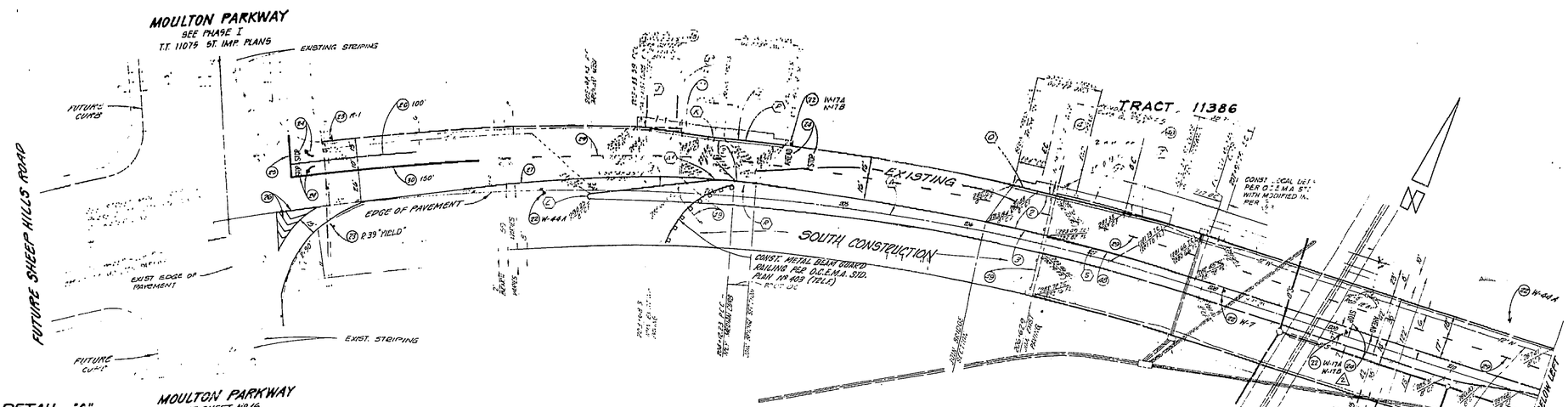

SHEEP HILLS ROAD

NOTE: SHEEP HILLS ROAD WILL BE STRIPED WHEN CONSTRUCTION OF BRIDGE AT ALISO CREEK IS COMPLETED

DETAIL "A"

RAISED MEDIAN MARKING

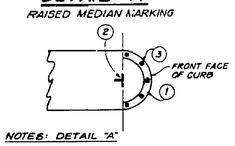

NOTES: DETAIL "A"

1. PAINT MEDIAN NOSE WITH WHITE "SCOTCHLITE" BRAND REFLECTIVE LIQUID, CODE 7212 OR EQUAL.
2. INSTALL FLEXIBLE VERTICAL TYPE "K" MARKER, RT. R10 OR TYPE "N" IN TELESPAR POST AS INDICATED ON PLAN.
3. INSTALL YELLOW REFLECTIVE MARKING ON FRONT FACE OF MEDIAN CURB NOSE - 3 STRIPS (4"X6") OR 3M # 3571 HIGH INTENSITY GRADE SCOTCH LITE HIGH TACK ADHESIVE OR EQUAL

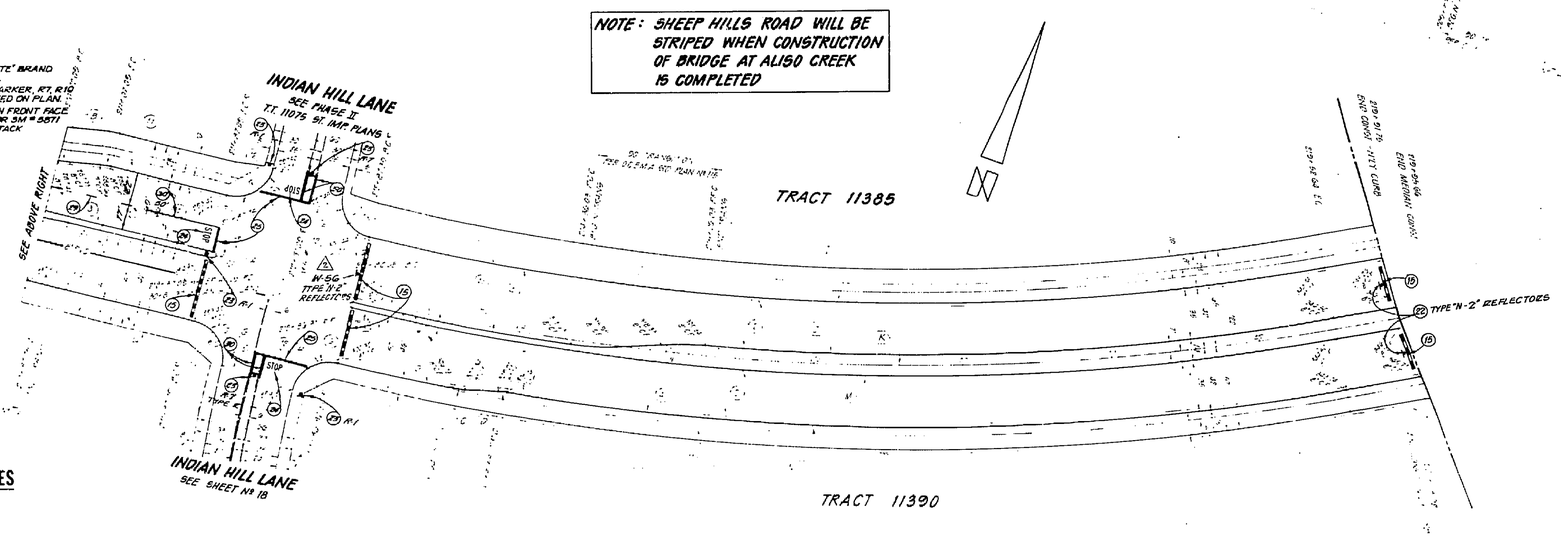

SHEEP HILLS ROAD SIGNING & STRIPING PLAN (NORTH)

(NOT IN CONTRACT)

55C - 529 R/L

SIGNING & STRIPING NOTES

22 - TRAFFIC WARNING SIGNS
23 - TRAFFIC REGULATORY SIGN
24 - GENERAL CONTROL NEW SIGN
25 - 4" SOLID WHITE STRIPE
26 - 4" SOLID WHITE STRIPE
27 - 4" SOLID WHITE STRIPE
28 - 4" SOLID WHITE STRIPE
29 - 4" DASHED YELLOW CENTERLINE STRIPE PER DETAIL 7/7
30 - [illegible]
31 - [illegible] EMA "S" PLANS [illegible]
32 - [illegible] EMA "S" PLANS [illegible]
33 - [illegible] EMA "S" PLANS [illegible]
34 - PAINT [illegible]
35 - [illegible]
16 - INSTALL TYPE "N-2" REFLECTOR PER OCEMA STD. PLAN Nº 303 W/ TYPE N-2

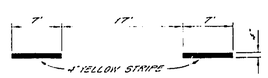

4" DASHED YELLOW CENTERLINE STRIPE (7/—)

NOT TO SCALE

Jack G. Raub Company Engineering & Planning PO Box 5081 725 Buena Street Costa Mesa California 92628 (949) 759 2121						PLAN SCALE 1" = 40'	TRAFFIC STRIPING AND SIGNING PLAN
						DES J.C. DWN R.H.	SHEEP HILLS ROAD BRIDGE ACROSS ALISO CREEK
	DATE	BY	REVISION DESCRIPTION	APP'D	DATE	CKD DATE 3/4/86	

SHEET 3 of 17

JN 213040

THEREBY CERTIFY THAT THIS IS A TRUE AND ACCURATE COPY OF THE ABOVE DOCUMENT TAKEN UNDER MY DIRECTION AND CONTROL ON THIS DATE IN SACRAMENTO CALIFORNIA PURSUANT TO AUTHORIZATION BY THE DIRECTOR OF TRANSPORTATION.
1-6-88 Donald Blackford
SUPERVISOR OF MICROFILM SERVICES

ClibPDF - www.fastio.com

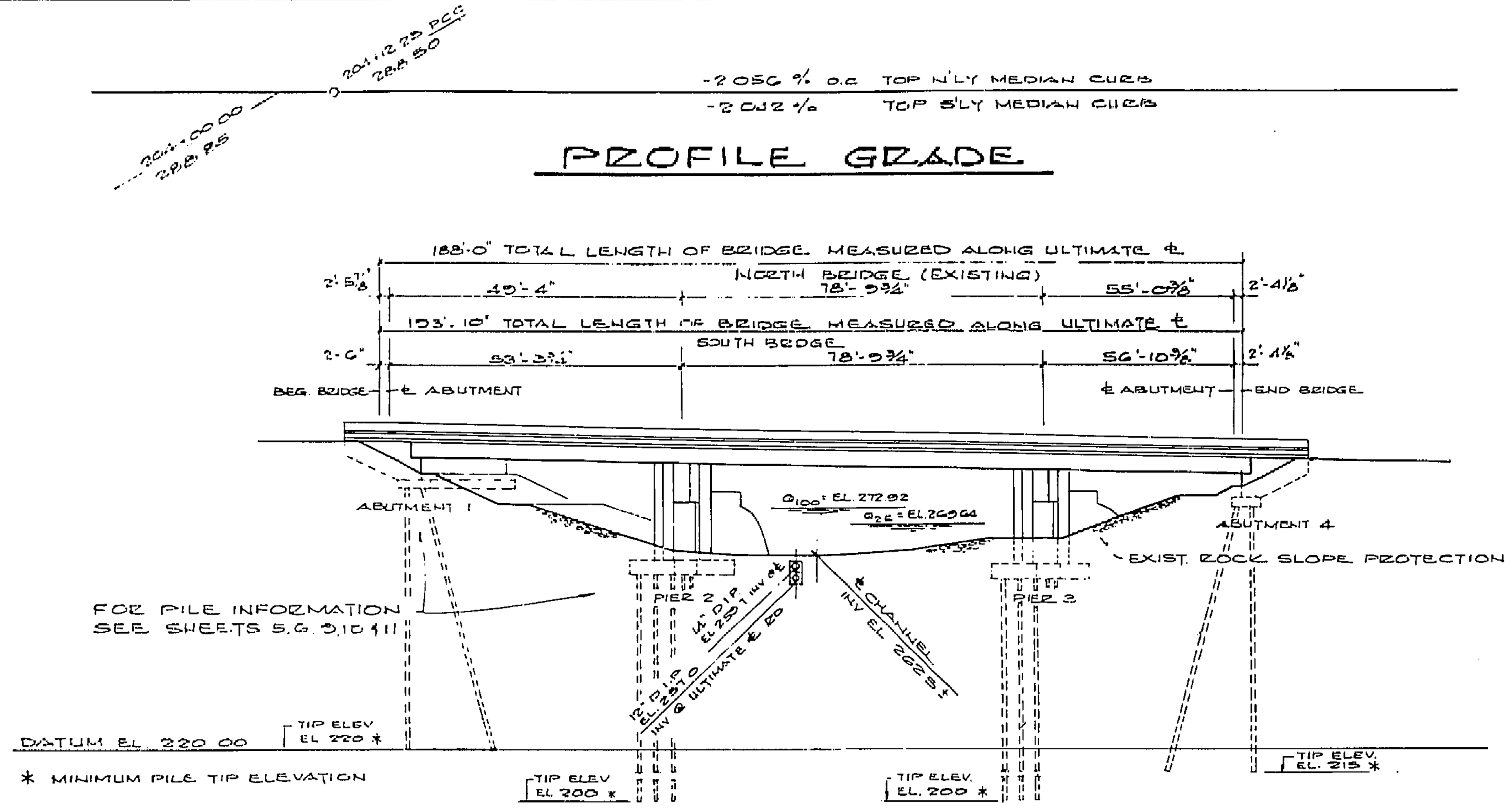

PROFILE GRADE

ELEVATION - NORTH BRIDGE (LOOKING UPSTREAM)
SCALE 1" = 20'

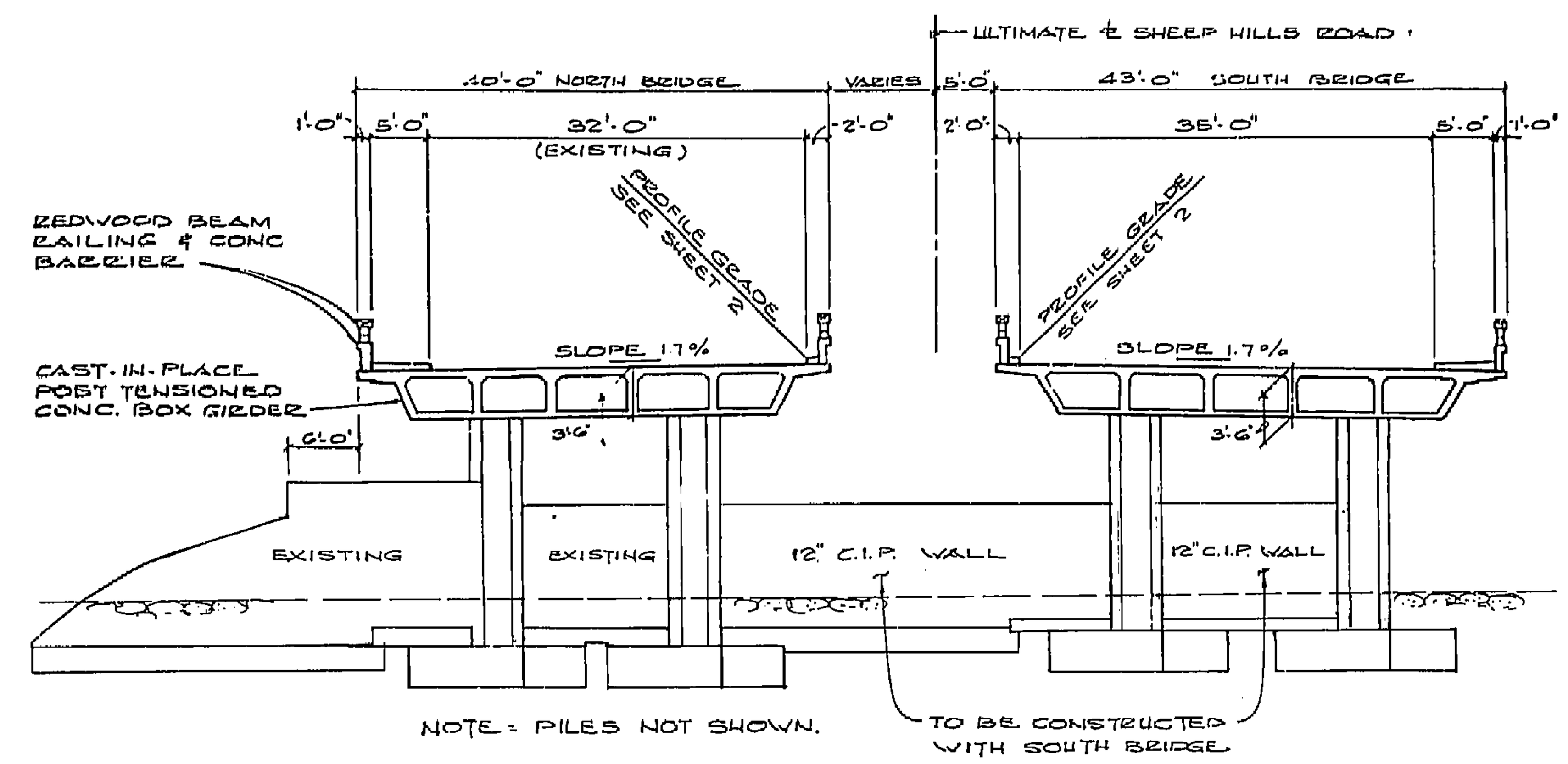

TYPICAL SECTION
SCALE 1" = 10'

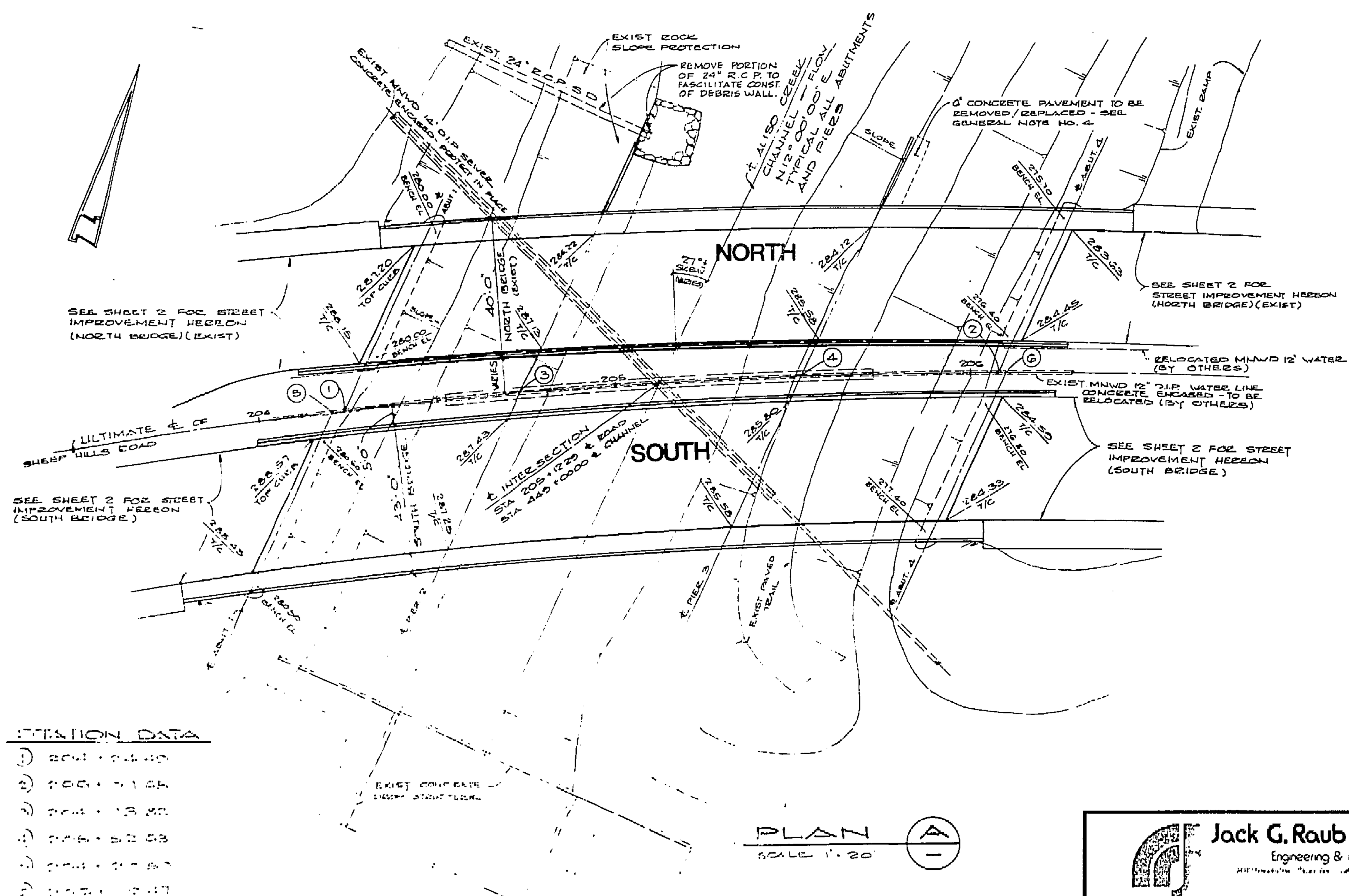

PLAN (A)
SCALE 1" = 20'

GENERAL NOTES

1. ALL WORKS SHALL BE DONE IN ACCORDANCE WITH THE LATEST EDITION OF THE STANDARD SPECIFICATIONS FOR PUBLIC WORK CONSTRUCTION, THE GENERAL CONDITIONS AND THE SPECIAL CONDITIONS AS SET FORTH IN THE PROJECT SPECIFICATIONS.

2. CONSTRUCTION MATERIAL MINIMUM REQUIRED STRENGTH:

CONCRETE	GIRDERS & DECK	F' = 4000 PSI
	COLUMNS, PILE CAPS	F' = 4000 PSI
	ABUTMENTS, WINGWALLS	F' = 3000 PSI
	DEBRIS WALL	F' = 3000 PSI

REINFORCEMENTS: ASTM A615 F' = 60,000 PSI

PRESTRESSING STEEL: SEVEN WIRE STRANDS, ASTM A416 LOW RELAXATION STEEL F = 250 OR 270 KSI

NOTE: ALL LAPS IN REINFORCEMENT STEEL SHALL BE 45 DIAMETER

3. PILE TYPES AND DRIVINGS THEREOF SHALL ADHERE TO THE GEOTECHNICAL REPORT PREPARED BY JACK G. RAUB COMPANY DATED OCTOBER 21, 1983, TITLED "GEOTECHNICAL INVESTIGATION, PILE FOUNDATION RECOMMENDATIONS FOR SHEEP HILL ROAD BRIDGE AT ALISO CREEK, PLANNING AREA 13, ALISO VIEJO".

4. ROCK CHANNEL PROTECTION AND APPURTENANT CHANNEL IMPROVEMENTS REMOVED DURING THE COURSE OF WORK SHALL BE REPLACED WITH EQUIVALENT MATERIALS IN ACCORDANCE WITH THE "PLANS FOR CONSTRUCTION OF ALISO CREEK, O.C.F.C.D. FACILITY NO. J01, FROM STATION 441+28 TO STATION 463+95," WITH THE EXCEPTION OF THE FILTER FABRIC MATERIAL, WHICH SHALL BE MIRAFI 700X, SUPAC 6NP, FIBERTEX 400 GRADE, POLY-FILTER X, OR FILTER WEAVE 70 OR EQUAL IN ACCORDANCE WITH OCEMA STANDARD PLAN 808, 1983 REVISION.

BRIDGE QUANTITY ESTIMATES

		NORTH (EXIST.)		SOUTH	
1.	STRUCTURAL EXCAVATION	625 C.Y.		600 C.Y.	
2.	STRUCTURAL BACKFILL	325 C.Y.		275 C.Y.	
3.	ROCK CHANNEL PROTECTION - 4'-2" THICK	150 S.Y.		140 S.Y.	
4.	STRUCTURAL CONCRETE	CONCRETE	REINF. STL.*	CONCRETE	REINF. STL.*
	DEBRIS WALL / FOOTINGS	81 C.Y.	5 TONS	34 C.Y.	3 TONS
	PILE CAPS AT COLUMNS	63 C.Y.	10 TONS	63 C.Y.	10 TONS
	COLUMNS	31 C.Y.	20 TONS	31 C.Y.	20 TONS
	ABUTMENTS AND WINGWALLS	115 C.Y.	7 TONS	130 C.Y.	8 TONS
	DECKS AND GIRDERS	420 C.Y.	47 TONS	449 C.Y.	54 TONS
	CURBS AND SIDEWALKS	36 C.Y.	2 TONS	36 C.Y.	2 TONS
5.	PRESTRESSING STEEL		17500 LBS.		20500 LBS.
6.	CONCRETE BARRIERS & WOOD RAILINGS		440 L.F.		449 L.F.
7.	FURNISH STEEL PILES (HP 12 x 74) 70 TONS 45 TONS		3520 L.F.		3810 L.F.
8.	DRIVE PILES (HP 12 x 74)		60 EA.		64 EA.
9.	12" C. I. P. WALLS		250 S.F.		1040 S.F.
10.	NEOPRENE BEARING PADS 12 X 12 X 1.5		12 EA.		12 EA.
11.	VERTICAL RESTRAINERS		10 EA.		10 EA.
12.	MISCELLANEOUS METALS		3410 LBS		3650 LBS.
13.	FURNISH PILES (HP 10 x 42)		787 L.F.		394 L.F.
14.	DRIVE PILES (HP 10 x 42)		20 EA.		10 EA.
15.	MANHOLE COVER AND FRAME		3 EA.		0 EA.

* INCLUDES 5% FOR LAP SPLICE.

55C-529 R/L

Jack G. Raub Company
Engineering & Planning

DATE | BY | REVISION DESCRIPTION | APP'D | DATE

PLAN SCALE

GENERAL PLAN

SHEEP HILLS ROAD BRIDGE ACROSS ALISO CREEK

SHEET 4 of 17

213040

HEREBY CERTIFY THAT THIS IS A TRUE AND ACCURATE COPY OF THE ABOVE DOCUMENT TAKEN UNDER MY DIRECTION AND CONTROL ON THIS DATE IN SACRAMENTO, CALIFORNIA PURSUANT TO AUTHORIZATION BY THE DIRECTOR OF TRANSPORTATION
1-6-88 Donald Blackford SUPERVISOR OF MICROFILM SERVICES

ClibPDF - www.fastio.com

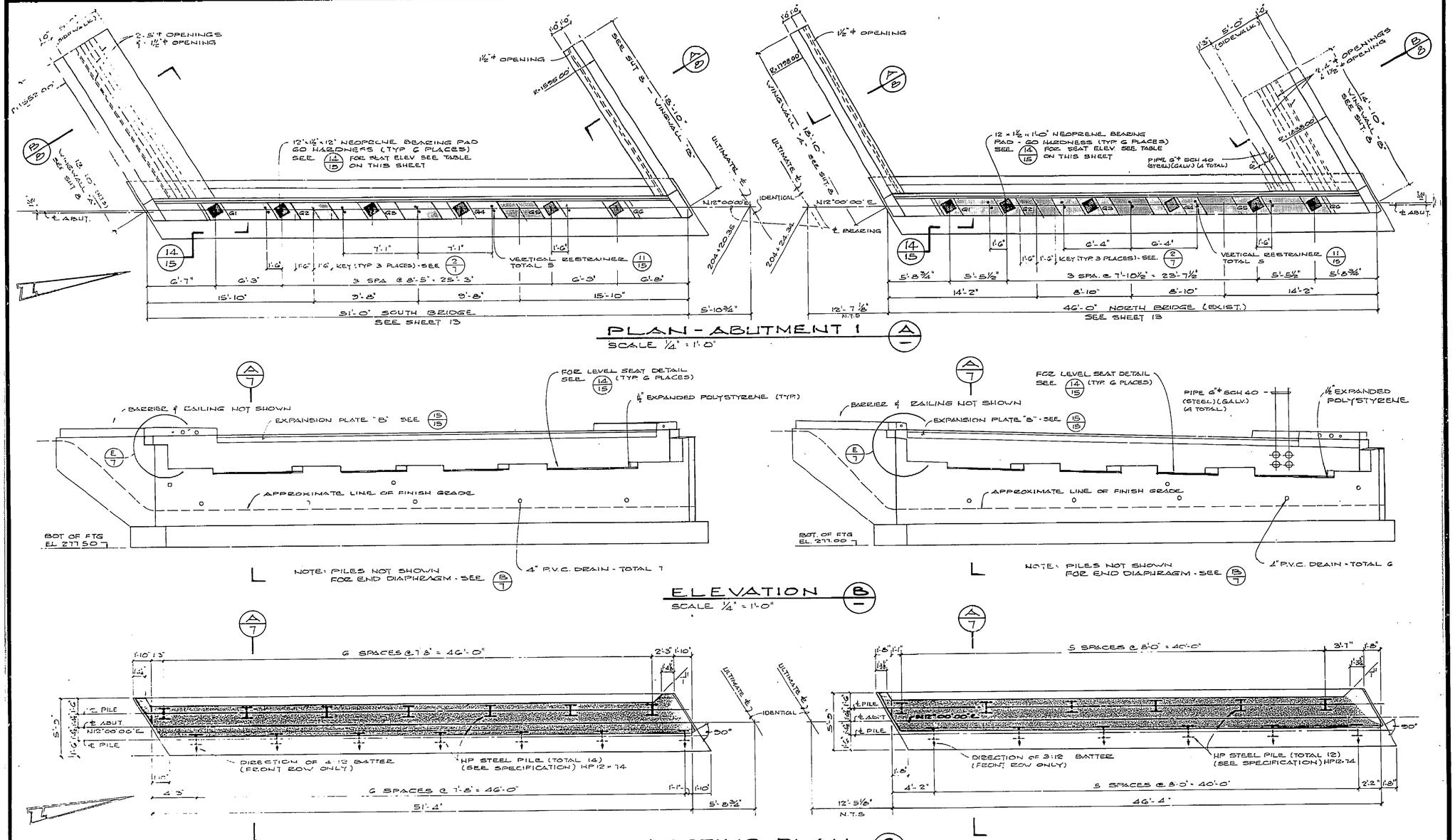

55C-529 R/L

Jack G. Raub Company
Engineering & Planning

DATE	BY	REVISION DESCRIPTION	APP'D	DATE

PLAN SCALE
DES J.G. DWN T.L.
CKD M.D.C. DATE 3/4/84

ABUTMENT I
PLAN & ELEVATION

SHEEP HILLS ROAD BRIDGE
ACROSS ALISO CREEK

SHEET 5 OF 17
IN 213040

HEREBY CERTIFY THAT THIS IS A TRUE AND ACCURATE COPY OF THE ABOVE DOCUMENT TAKEN UNDER MY DIRECTION AND CONTROL ON THIS DATE IN SACRAMENTO CALIFORNIA PURSUANT TO AUTHORIZATION BY THE DIRECTOR OF TRANSPORTATION.
1-6-88 Ronald R. Blackford
SUPERVISOR OF MICROFILM SERVICES

ClibPDF - www.fastio.com

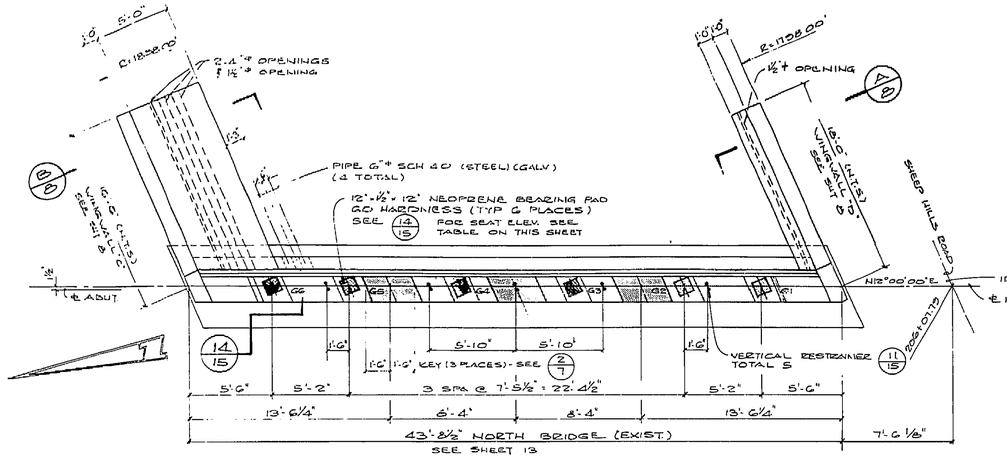

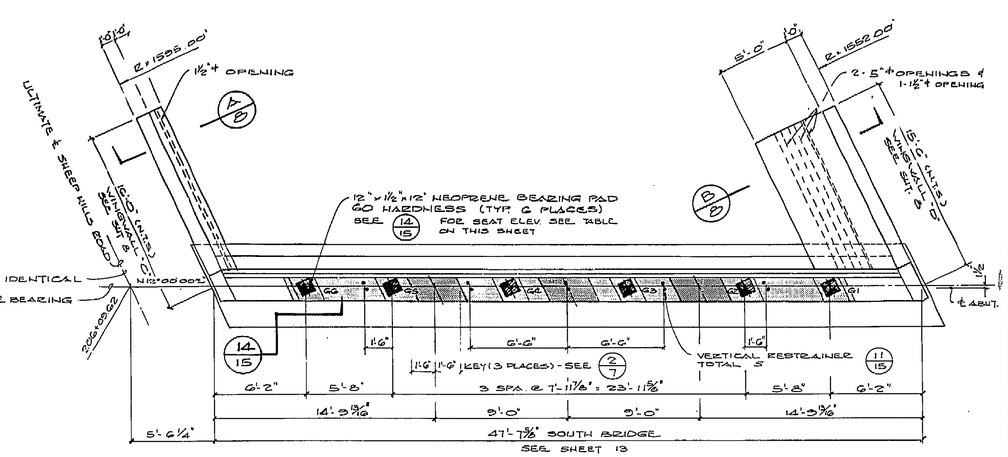

PLAN - ABUTMENT 4 (A/—)

SCALE ¼" = 1'-0"

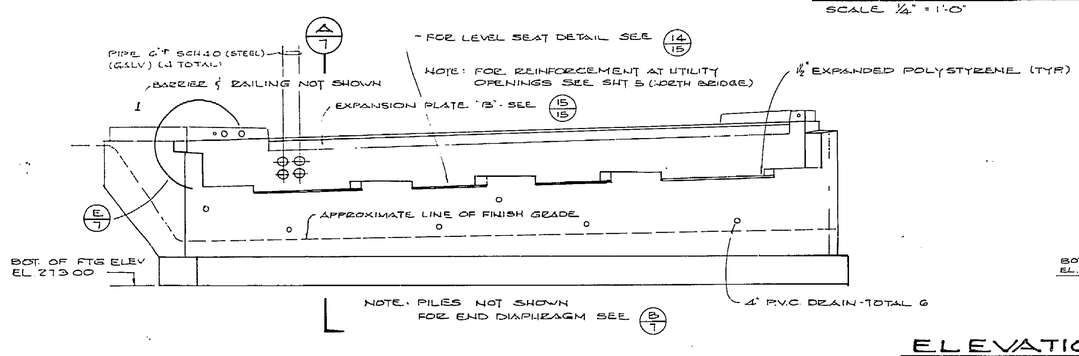

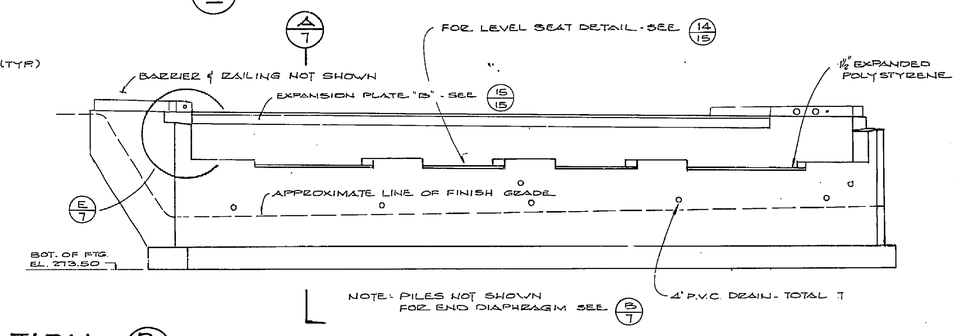

ELEVATION (B/—)

SCALE ¼" = 1'-0"

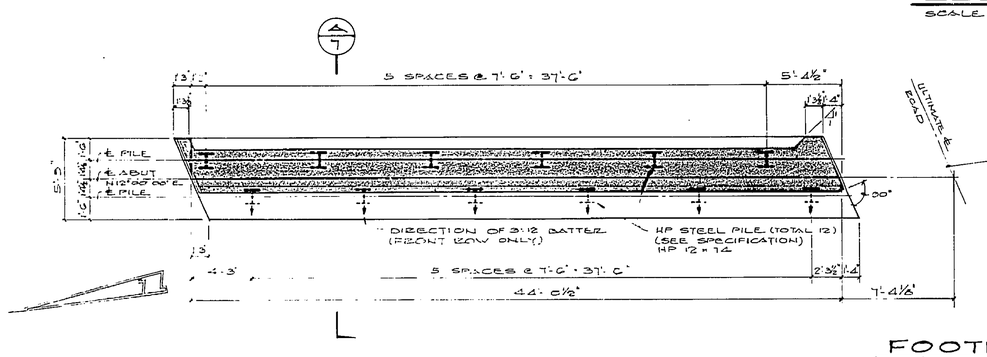

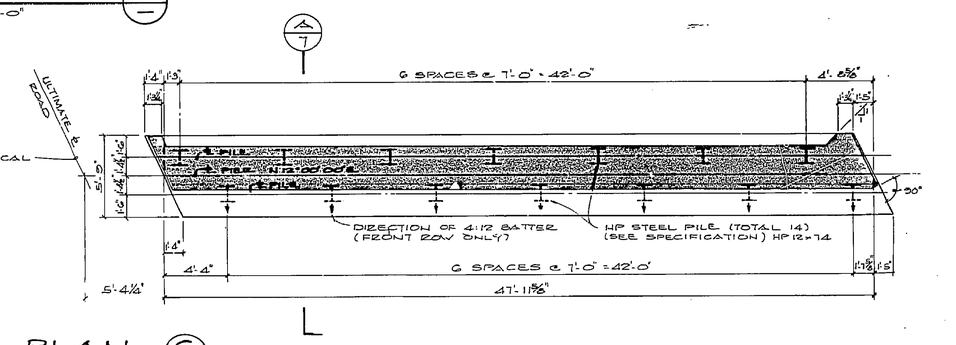

FOOTING PLAN (C/—)

SCALE ¼" = 1'-0"

BEARING SEAT ELEVATIONS

ABUTMENT 4

LENGTH GIRDER (SPAN)	ELEVATION GIRDER
[illegible]	[illegible]
[illegible]	[illegible]
[illegible]	[illegible]
[illegible]	[illegible]
[illegible]	[illegible]
[illegible]	[illegible]

55C - 529 R/L

Jack G. Raub Company
Engineering & Planning

DATE	BY	REVISION DESCRIPTION	APP'D	DATE

PLAN SCALE — DES J.G. DWN T.U. CKD M.D.C. DATE 3/14/62

ABUTMENT 4
PLAN & ELEVATION

SHEEP HILLS ROAD BRIDGE
ACROSS ALISO CREEK

SHEET 6 OF 17

IN 213040

I HEREBY CERTIFY THAT THIS IS A TRUE AND ACCURATE COPY OF THE ABOVE DOCUMENT TAKEN UNDER MY DIRECTION AND CONTROL ON THIS DATE IN SACRAMENTO CALIFORNIA PURSUANT TO AUTHORIZATION BY THE DIRECTOR OF TRANSPORTATION.
1-6-88 Ronald Blackford
SUPERVISING OF MICROFILM SERVICES

ClibPDF - www.fastio.com

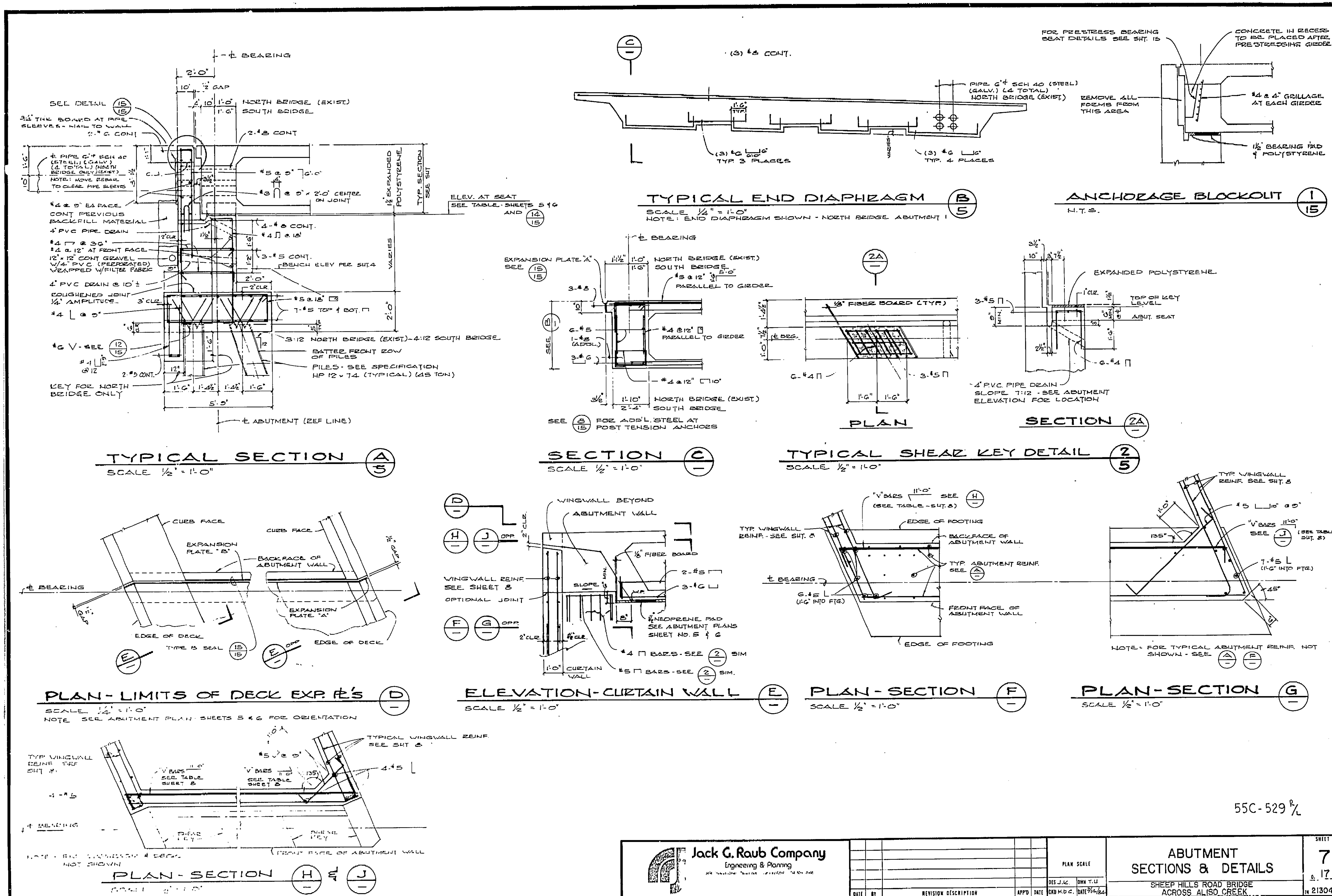

Jack G. Raub Company
Engineering & Planning

DATE	BY	REVISION DESCRIPTION	APP'D	DATE

PLAN SCALE

DES J.K. | DWN T.U. | CKD M.D.C. | DATE 9/16/86

ABUTMENT
SECTIONS & DETAILS

SHEEP HILLS ROAD BRIDGE
ACROSS ALISO CREEK

SHEET 7 of 17

213040

I HEREBY CERTIFY THAT THIS IS A TRUE AND ACCURATE COPY OF THE ABOVE DOCUMENT TAKEN UNDER MY DIRECTION AND CONTROL ON THIS DATE IN SACRAMENTO, CALIFORNIA PURSUANT TO AUTHORIZATION BY THE DIRECTOR OF TRANSPORTATION.
7-6-88 Donald Blackford SUPERVISOR OF MICROFILM SERVICES

ClibPDF - www.fastio.com

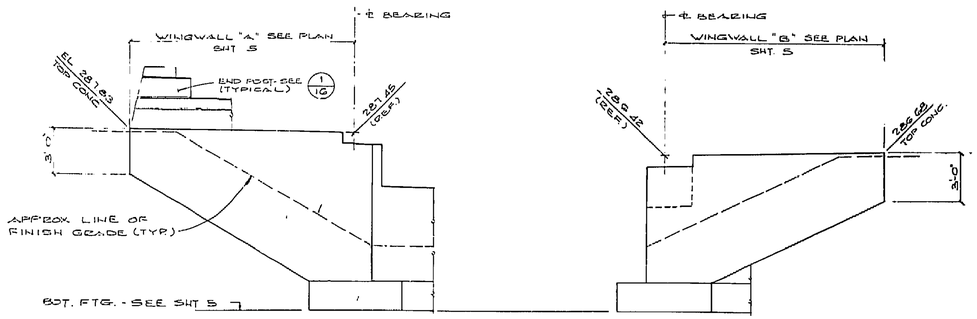

NORTH BRIDGE - ABUTMENT 1
SCALE 1/4" = 1'-0" (EXISTING)

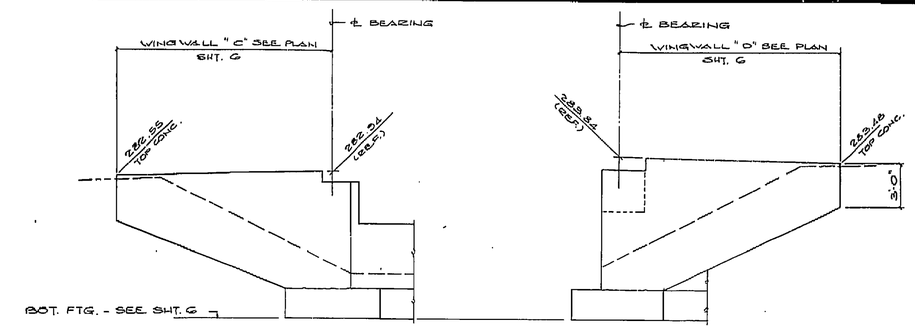

NORTH BRIDGE - ABUTMENT 4
SCALE 1/4" = 1'-0" (EXISTING).

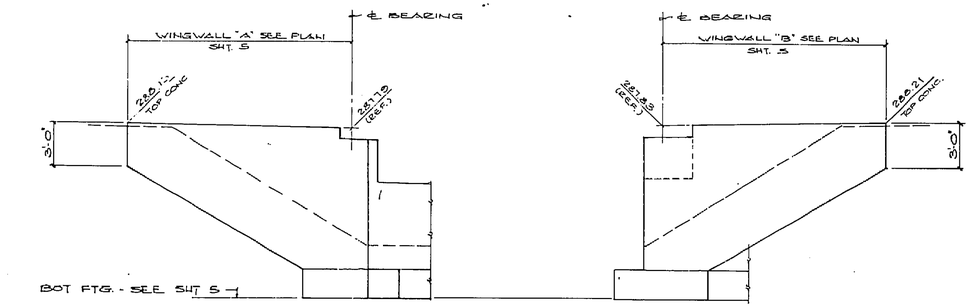

SOUTH BRIDGE - ABUTMENT 1
SCALE 1/4" = 1'-0"

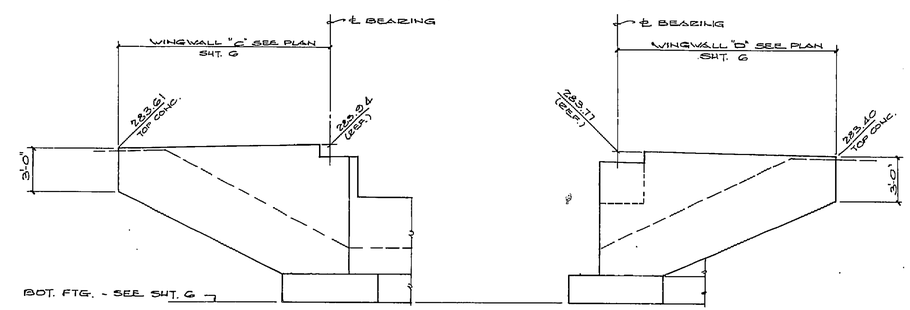

SOUTH BRIDGE - ABUTMENT 4
SCALE 1/4" = 1'-0"

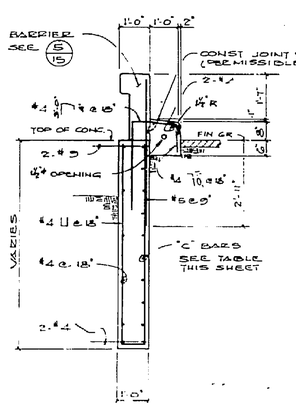

SECTION A/5
SCALE 1/2" = 1'-0"

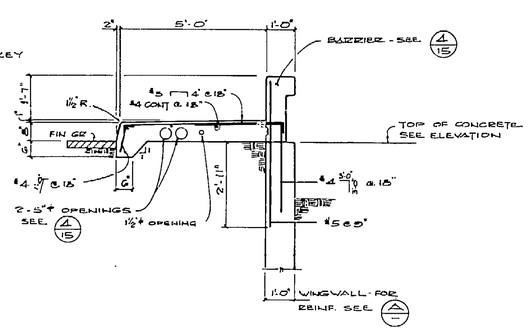

SECTION B/5
SCALE 1/2" = 1'-0"

NORTH BRIDGE (EXIST.)		
WINGWALL	"C" BARS	"V" BARS
"A"	#8 @ 9"	#5 @ 9"
"B"	#6 @ 9"	#4 @ 9"
"C"	#7 @ 9"	#4 @ 9"
"D"	#7 @ 9"	#4 @ 9"

SOUTH BRIDGE		
WINGWALL	"C" BARS	"V" BARS
"A"	#8 @ 9"	#5 @ 9"
"B"	#8 @ 9"	#5 @ 9"
"C"	#7 @ 9"	#4 @ 9"
"D"	#7 @ 9"	#4 @ 9"

NOTE: FOR LOCATION OF "V" BARS SEE SHEET 7

REINF. SCHEDULE 1

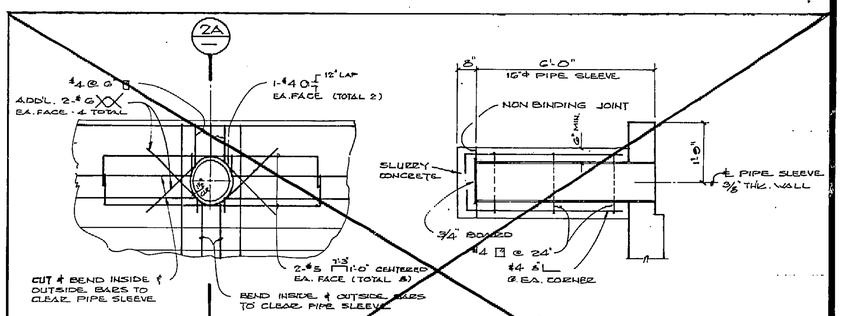

ELEVATION — SECTION 2A

16"φ STEEL PIPE SLEEVE THRU ABUTMENT 2/5
SCALE 1/2" = 1'-0"

OMIT

55C-529 B/L

Jack G. Raub Company
Engineering & Planning

DATE	BY	REVISION DESCRIPTION	APP'D	DATE

PLAN SCALE — DES J.C. DWN T.U. CKD M.D.C. DATE 7/4/64

WINGWALLS
SECTIONS & DETAILS

SHEEP HILLS ROAD BRIDGE
ACROSS ALISO CREEK

SHEET 8 OF 17

JN 213040

HEREBY CERTIFY THAT THIS IS A TRUE AND ACCURATE COPY OF THE ABOVE DOCUMENT TAKEN, UNDER MY DIRECTION AND CONTROL ON THIS DATE IN SACRAMENTO, CALIFORNIA PURSUANT TO AUTHORIZATION BY THE DIRECTOR OF TRANSPORTATION
7-6-88 Donald L. Blackford
SUPERVISOR OF MICROFILM SERVICES

ClibPDF - www.fastio.com

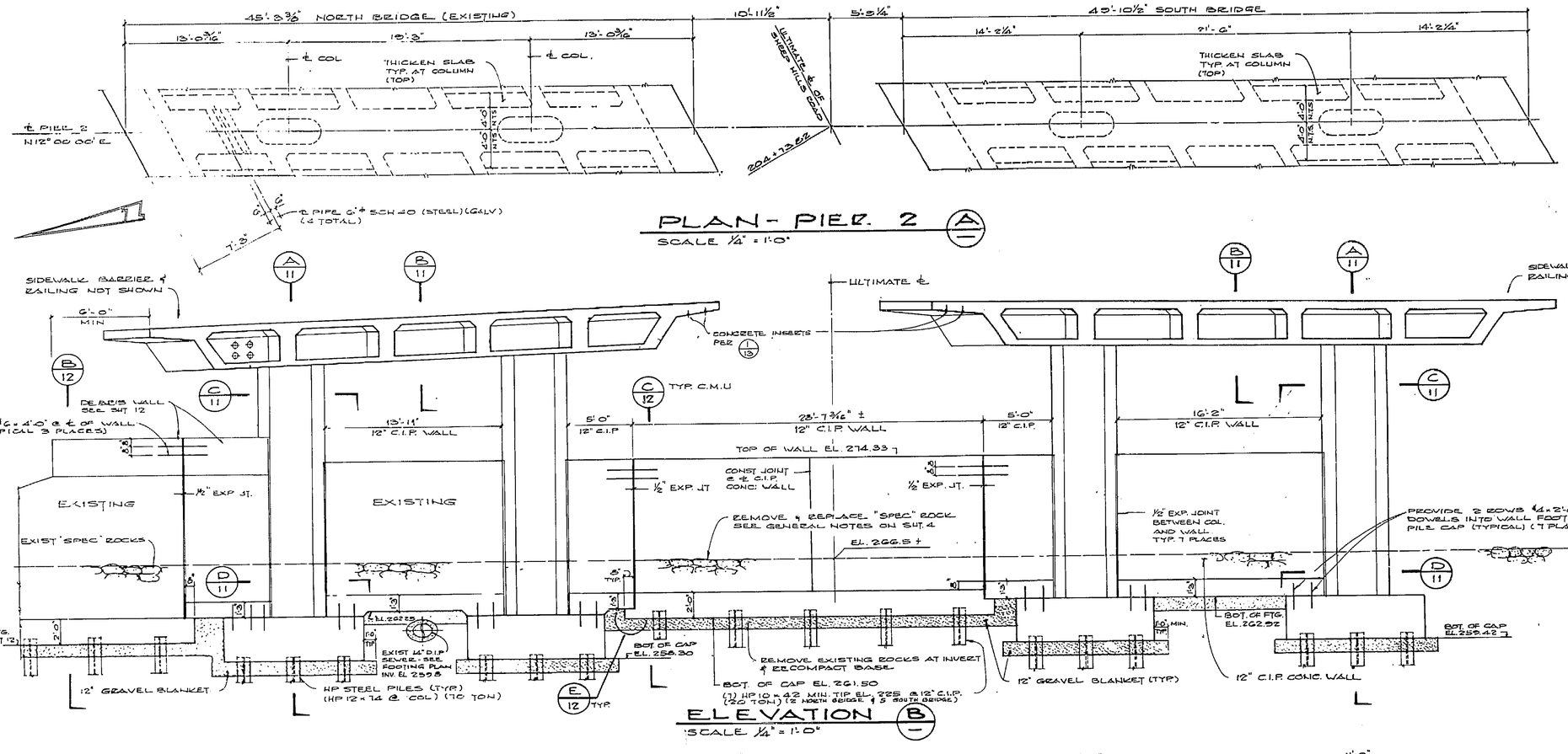

55C-529 R/L

Jack G. Raub Company
Engineering & Planning

DATE	BY	REVISION DESCRIPTION	APP'D	DATE

PLAN SCALE
DES J.L. DWN T.U.
CKD M.D.C. DATE 2/4/94

PIER 2
PLAN & ELEVATION

SHEEP HILLS ROAD BRIDGE
ACROSS ALISO CREEK

SHEET 9 OF 17

JN 213040

HEREBY CERTIFY THAT THIS IS A TRUE AND ACCURATE COPY OF THE ABOVE DOCUMENT TAKEN FROM THE RECORDS OF THE DEPARTMENT OF TRANSPORTATION.
1-6-98 Donald Blackford
STATE OF CALIFORNIA
DEPARTMENT OF TRANSPORTATION

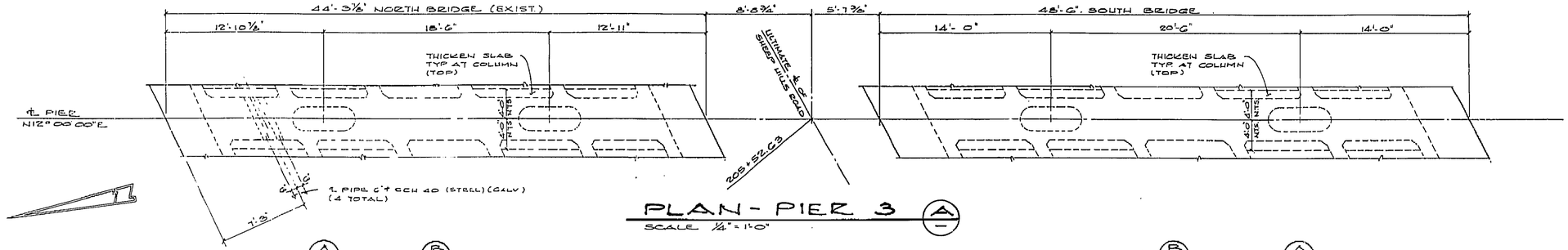

PLAN - PIER 3 (A)

SCALE 1/4" = 1'-0"

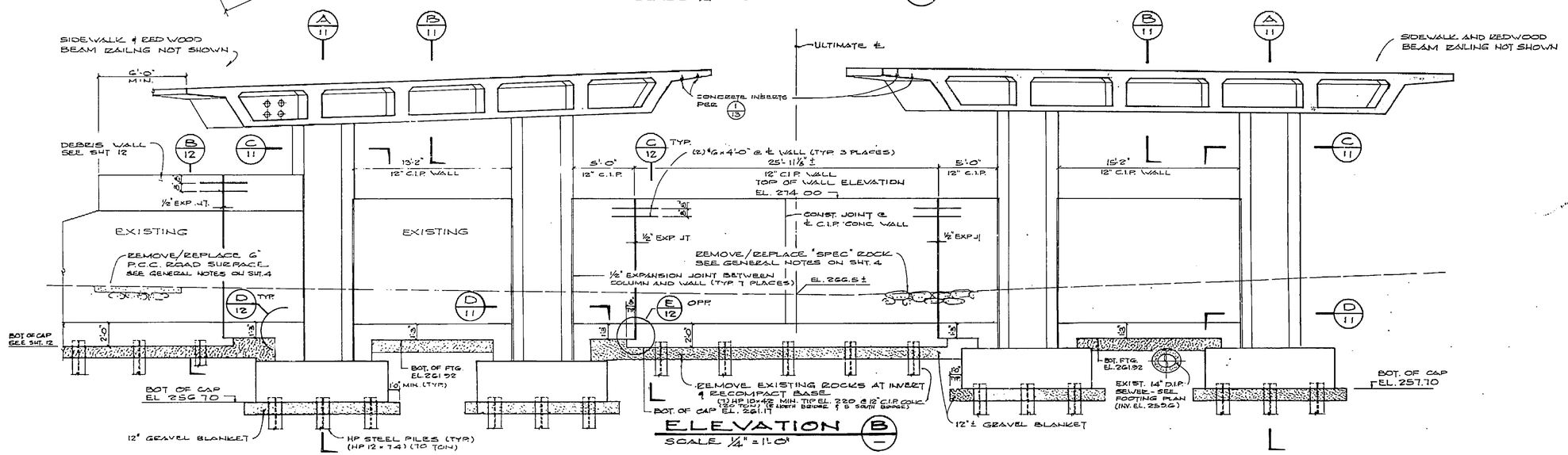

ELEVATION (B)

SCALE 1/4" = 1'-0"

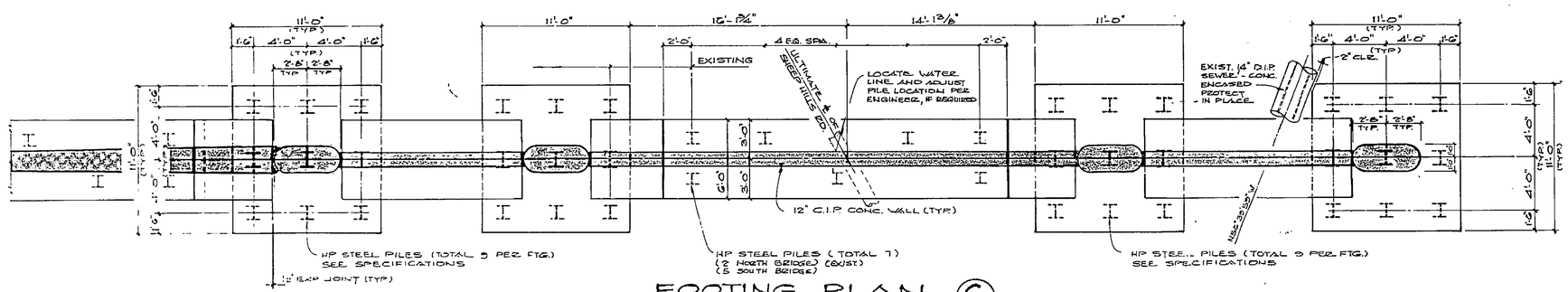

FOOTING PLAN (C)

SCALE 1/4" = 1'-0"

55C - 529 P/L

Jack G. Raub Company
Engineering & Planning

DATE	BY	REVISION DESCRIPTION	APD	DATE

PLAN SCALE
DES. J.C. DWN. T.U.
CKD. M.D.G. DATE 5/9/84

PIER 3
PLAN & ELEVATION

SHEEP HILLS ROAD BRIDGE
ACROSS ALISO CREEK

SHEET 10 OF 17

JN 213040

I HEREBY CERTIFY THAT THIS IS A TRUE AND ACCURATE COPY OF THE ABOVE DOCUMENT TAKEN UNDER MY DIRECTION AND CONTROL OF THIS DATE IN SACRAMENTO, CALIFORNIA, PURSUANT TO AUTHORIZATION BY THE DIRECTOR OF TRANSPORTATION.
1-6-88 Donald L. Blackford
SUPERVISOR OF MICROFILM SERVICES

ClibPDF - www.fastio.com

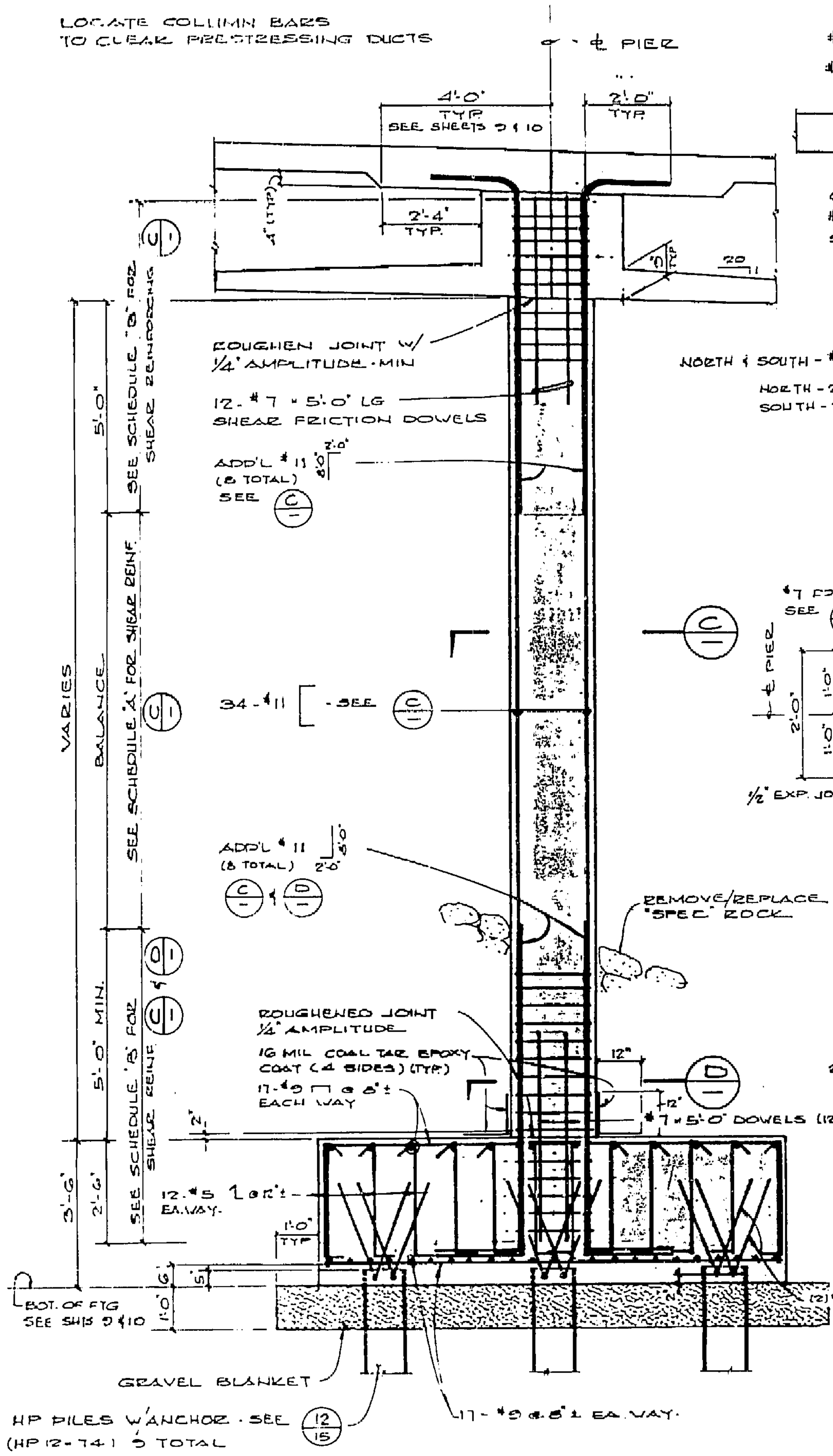

SECTION A
SCALE 1/2" = 1'-0"

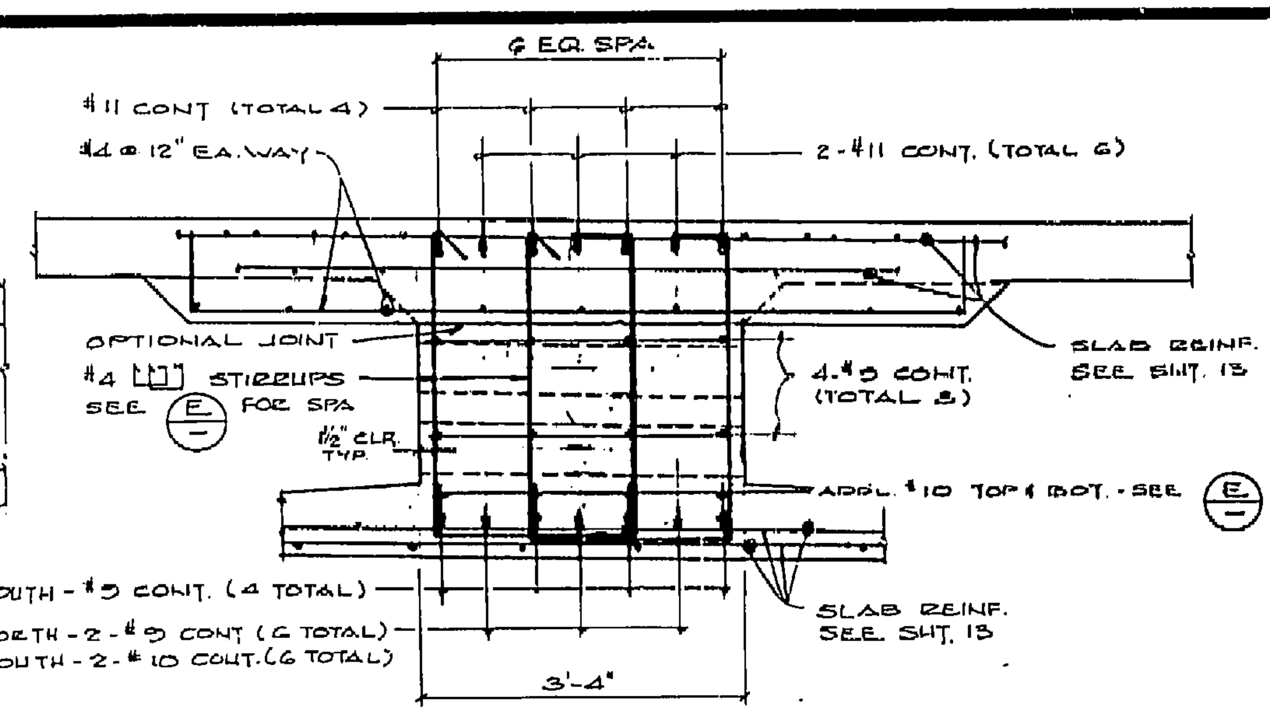

SECTION B
SCALE 3/4" = 1'-0"

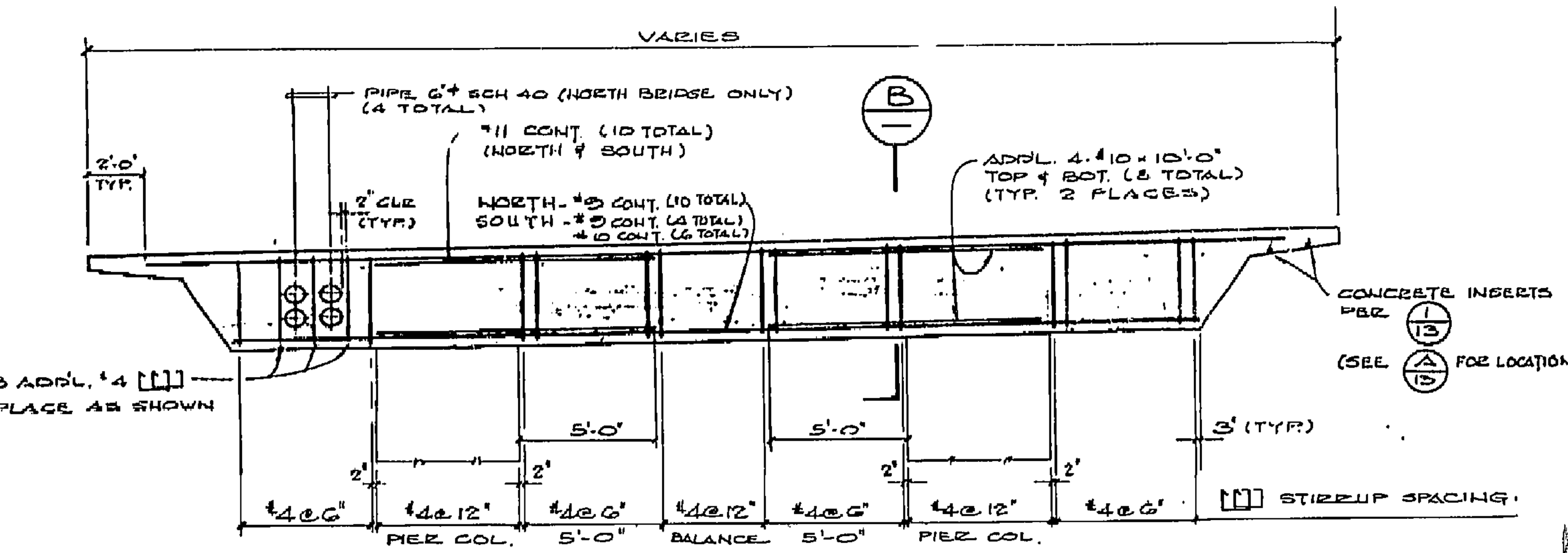

COL. CAP ELEVATION E/9
SCALE 1/4" = 1'-0"

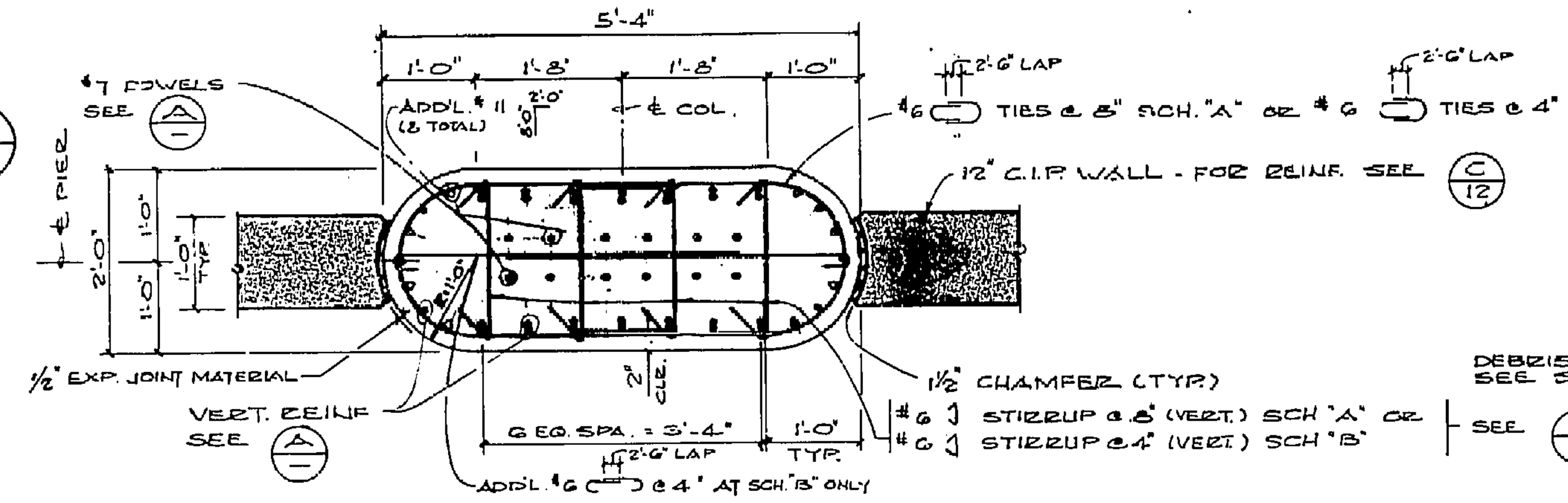

SECTION C
SCALE 3/4" = 1'-0"

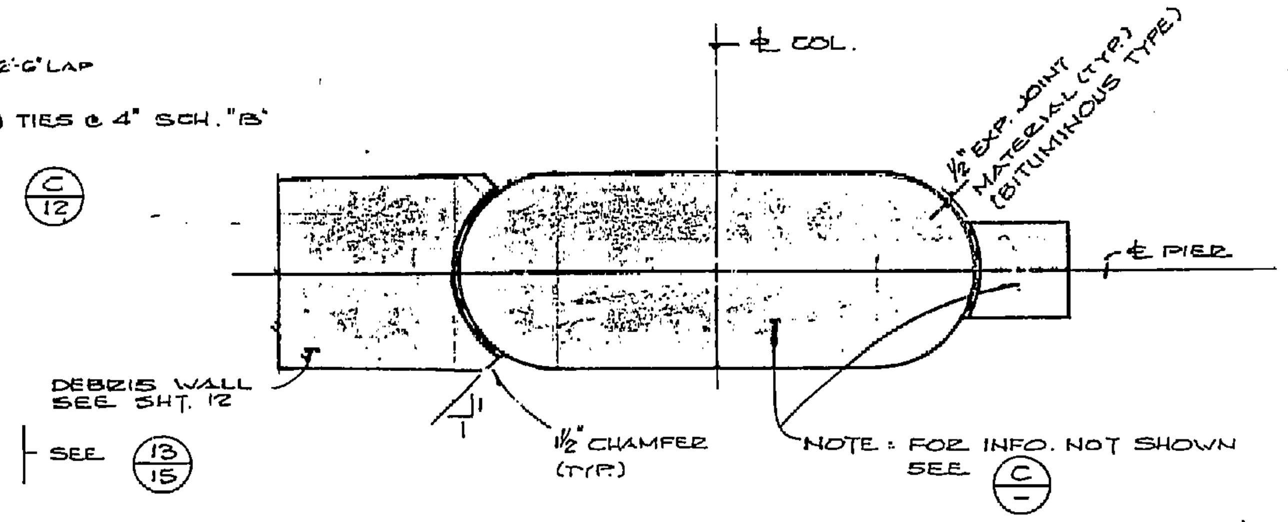

SECTION F/12
SCALE 3/4" = 1'-0"

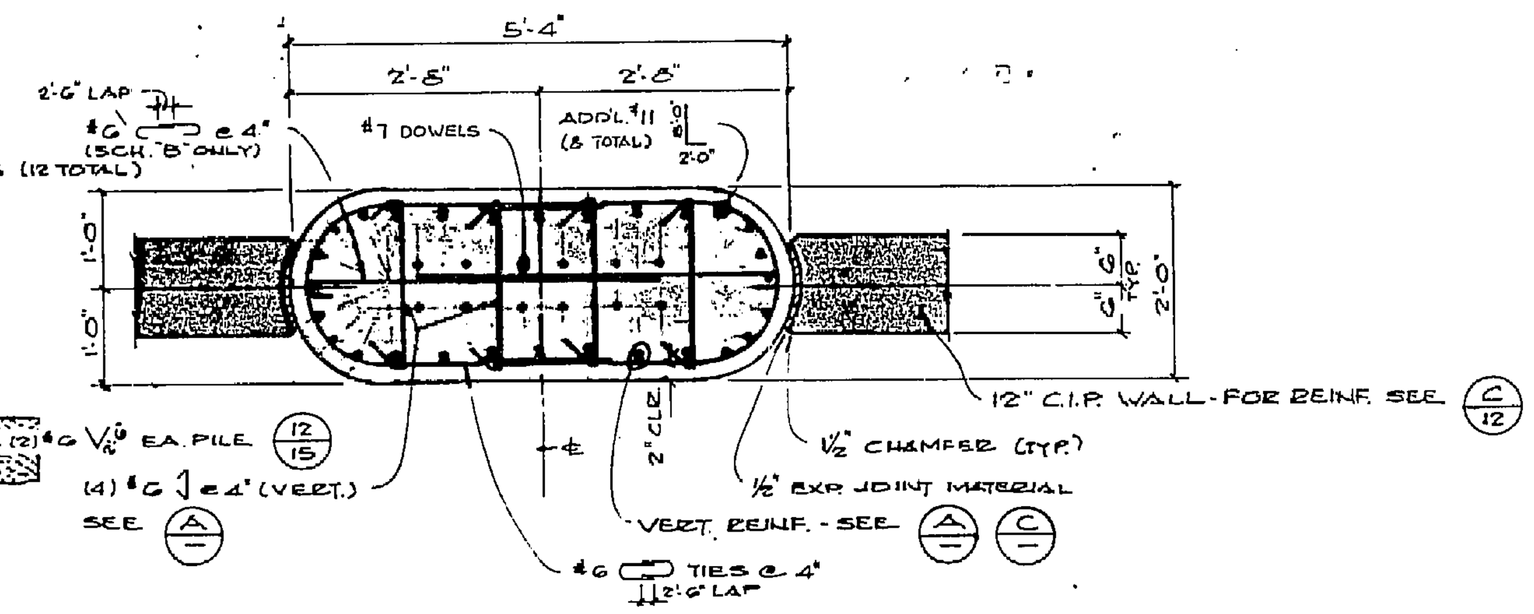

SECTION D
SCALE 3/4" = 1'-0"

DESIGN PILE DATA (HP 12 X 74)				
LOCATION	PILE CUT-OFF	PILE TIP ELEVATION	PILE LENGTH	AVERAGE AS-BUILT PILE
ABUTMENT 1	277.40	220.00	57.40	50.11
PIER 2	258.70	200.00	58.70	35.63
PIER 3	257.10	200.00	57.10	41.36
ABUTMENT 4	273.40	215.00	58.40	53.67

AS-BUILT PILE DRIVING DATA	
PILE DRIVER MAKE AND MODEL	KOBE K-22
DRIVING ACTION	DIESEL HAMMER
RATED ENERGY	APPROX. 45,000 FT-LB
RAIN WEIGHT	N/A
MAXIMUM STROKE	9.43 FEET
BEARING VALUE FORMULA	ENGINEERING NEWS RECORD
P = ALLOWABLE CAPACITY = (2)(4850)(FALL IN FEET) / (INCHES PER BLOW) + 0.1	

LOCATION	CUT-OFF ELEVATION	MAX. TIP ELEVATION	MIN. TIP ELEVATION	AVERAGE TIP ELEVATION	AVERAGE STROKE HEIGHT	AVERAGE BEARING VALUE
ABUTMENT 1	277.40	242.40	220.11	227.29	7.46'	80 TONS+
PIER 2	258.70	227.70	208.70	220.07	9.43'	80 TONS+
PIER 3	257.10	223.89	208.77	215.74	9.43'	80 TONS+
ABUTMENT 4	273.40	225.44	215.34	219.53	7.46'	70 TONS+

EXISTING NORTH BRIDGE PILE DATA

DESIGN PILE DATA (HP 10 X 42)				
LOCATION	PILE CUT-OFF	PILE TIP ELEVATION	PILE LENGTH	AVERAGE AS-BUILT PILE
PIER 2 DEBRIS WALL	260.30	225.00	35.30	34.58
PIER 2 DIVIDER WALL	262.00	225.00	37.00	40.98
PIER 3 DEBRIS WALL	261.75	220.00	41.75	39.31
PIER 3 DIVIDER WALL	261.75	220.00	41.75	41.79

AS-BUILT PILE DRIVING DATA	
PILE DRIVER MAKE AND MODEL	KOBE K-22
DRIVING ACTION	DIESEL HAMMER
RATED ENERGY	APPROX. 45,000 FT-LBS.
RAIN WEIGHT	N/A
MAXIMUM STROKE	9.43 FEET
BEARING VALUE FORMULA	ENGINEERING NEWS RECORD
P = ALLOWABLE CAPACITY = (2)(4850)(FALL IN FEET) / (INCHES PER BLOW) + 0.1	

LOCATION	CUT-OFF ELEVATION	MAX. TIP ELEVATION	MIN. TIP ELEVATION	AVERAGE TIP ELEVATION	AVERAGE STROKE HEIGHT	AVERAGE BEARING VALUE
PIER 2 DEBRIS WALL	260.30	229.05	223.90	225.72	6.45'	30 TONS+
PIER 2 DIVIDER WALL	262.00	224.77	217.27	221.02	6.45'	40 TONS+
PIER 3 DEBRIS WALL	261.75	233.10	217.83	222.44	7.46'	80 TONS+
PIER 3 DIVIDER WALL	261.75	220.10	219.81	219.96	9.43'	80 TONS+

55C-529 R/L

Jack G. Raub Company
Engineering & Planning

PLAN SCALE

DES J.K. | DWN T.U.
CKD M.D.C. | DATE 3/14/84

PIER
SECTIONS & DETAILS

SHEEP HILLS ROAD BRIDGE
ACROSS ALISO CREEK

SHEET 11 OF 17

JN 213040

DATE | BY | REVISION DESCRIPTION | APP'D | DATE

HEREBY CERTIFY THAT THIS IS A TRUE AND ACCURATE COPY OF THE ABOVE DOCUMENT TAKEN ... MICROFILM SERVICES
7-6-88 Donald Blackford

ClibPDF - www.fastio.com

NOTE: DIMENSIONS SHOWN (- -) : PIER 3 DEBRIS WALL.

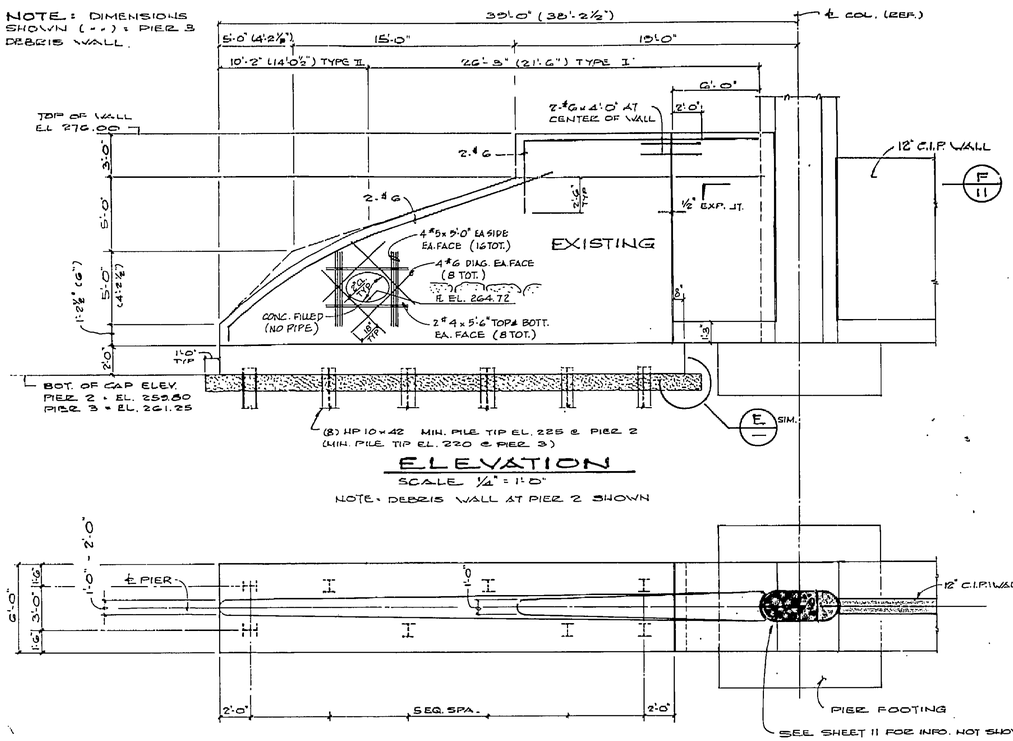

ELEVATION

SCALE ¼" = 1'-0"

NOTE: DEBRIS WALL AT PIER 2 SHOWN

PLAN

SCALE ¼" = 1'-0"

DEBRIS WALL (A / 9)

SCALE - AS NOTED

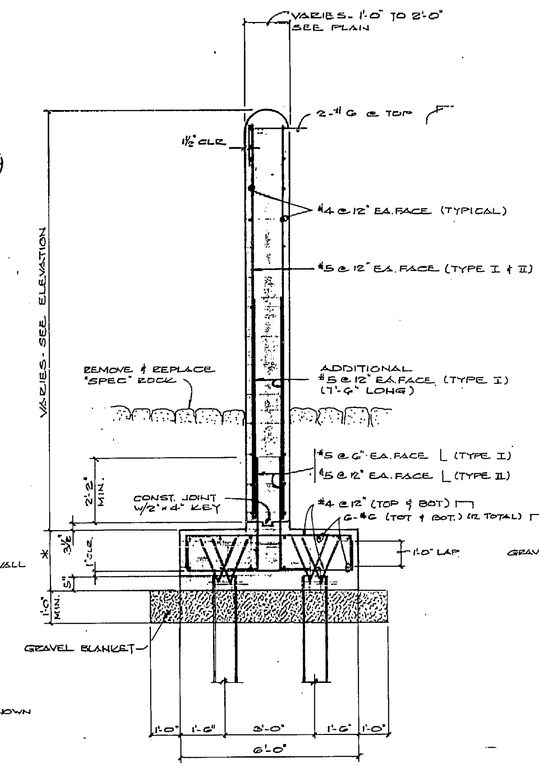

TYPICAL SECTION (B / 9)

SCALE ½" = 1'-0"

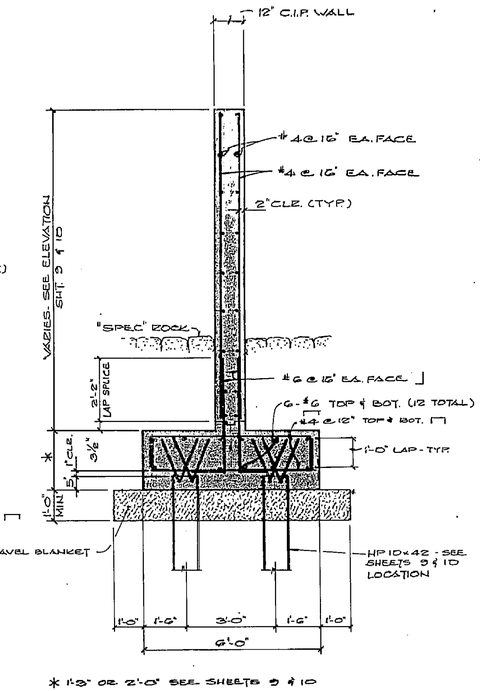

TYP. 12" C.I.P. WALL (C / 9)

SCALE ½" = 1'-0"

NOTE: FOR ADDITIONAL INFORMATION SEE SHTS. 9 & 10

NOTE: ALL PILES SHOWN ARE HP 10x42 DRIVEN TO A 20 TON ALLOWABLE CAPACITY.

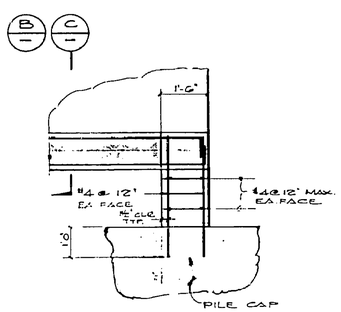

CONC. PEDESTAL (D)

SCALE ½" = 1'-0"

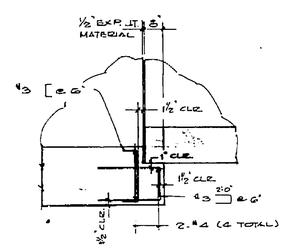

FOOTING SEAT (E)

SCALE ½" = 1'-0"

55C-529 R/L

Jack G. Raub Company
Engineering & Planning

DATE	BY	REVISION DESCRIPTION	APP'D	DATE

PLAN SCALE

DES J.C. DWN T.U.
CKD M.D.C. DATE 7/19/84

DEBRIS WALL AND MASONRY SECTION

SHEEP HILLS ROAD BRIDGE ACROSS ALISO CREEK

SHEET 12 OF 17

IN 213040

I HEREBY CERTIFY THAT THIS IS A TRUE AND ACCURATE COPY OF THE ABOVE DOCUMENT TAKEN UNDER MY DIRECTION AND CONTROL ON THIS DATE IN SACRAMENTO CALIFORNIA PURSUANT TO AUTHORIZATION BY THE DIRECTOR OF TRANSPORTATION.
7-6-88 Donald Blackford
SUPERVISOR OF MICROFILM SERVICES

ClibPDF - www.fastio.com

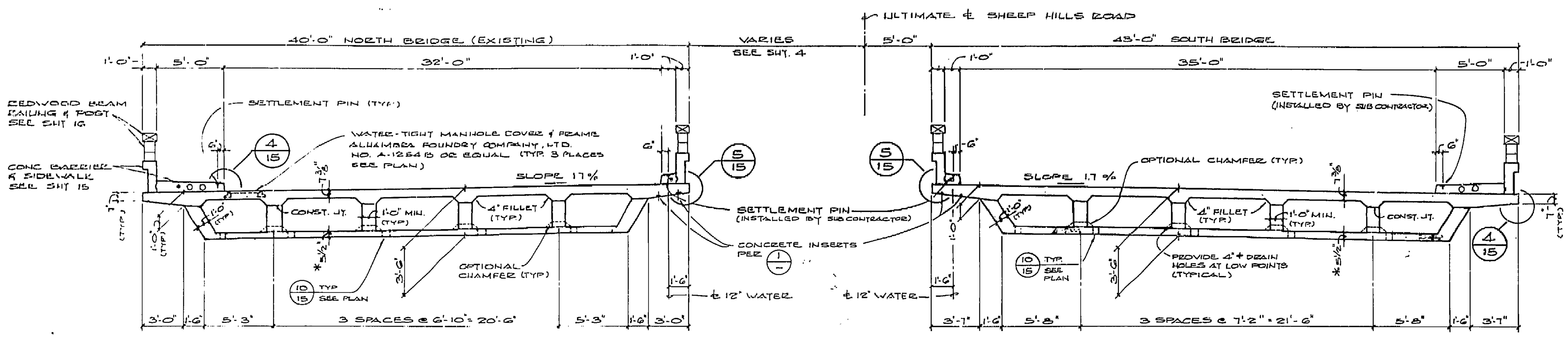

NOTE:
* FLARE TO 5' AT BENTS IN 20:1

TYPICAL SECTION - GEOMETRY (A)

SCALE 1/4" = 1'-0"

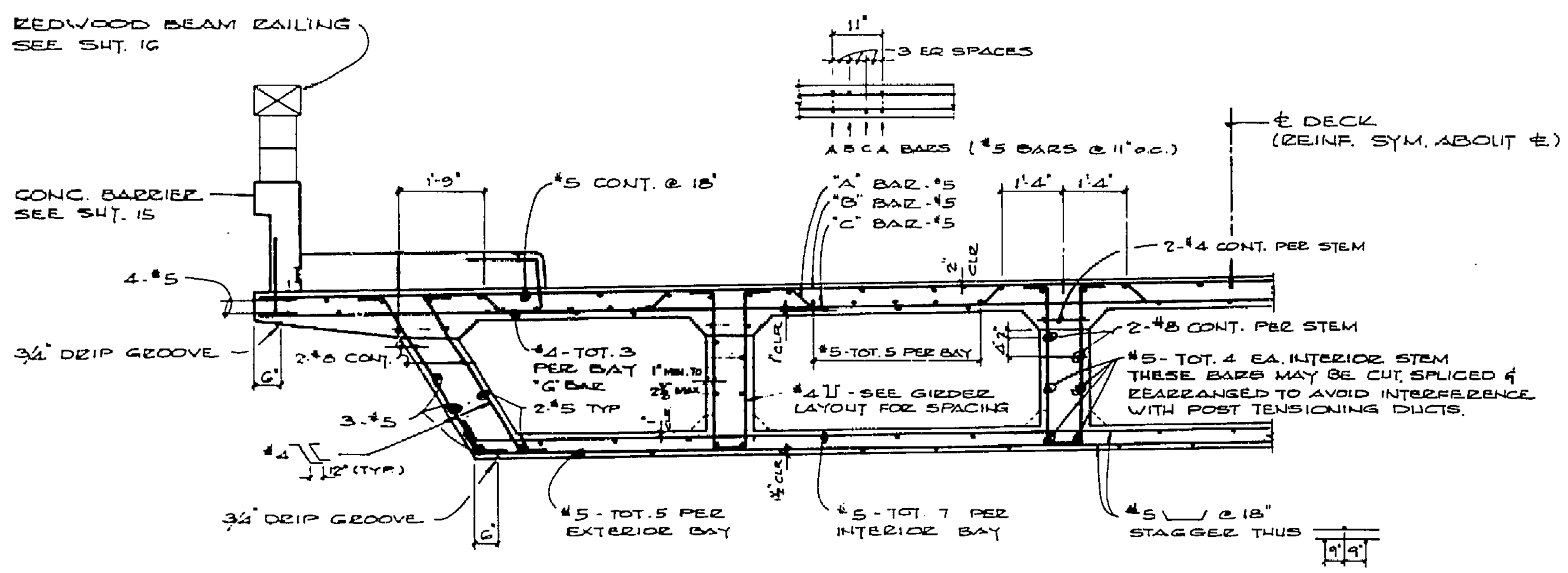

TYPICAL SECTION - REINFORCEMENT (B)

SCALE 1/2" = 1'-0"

NOTE: PRESTRESSING DUCTS NOT SHOWN

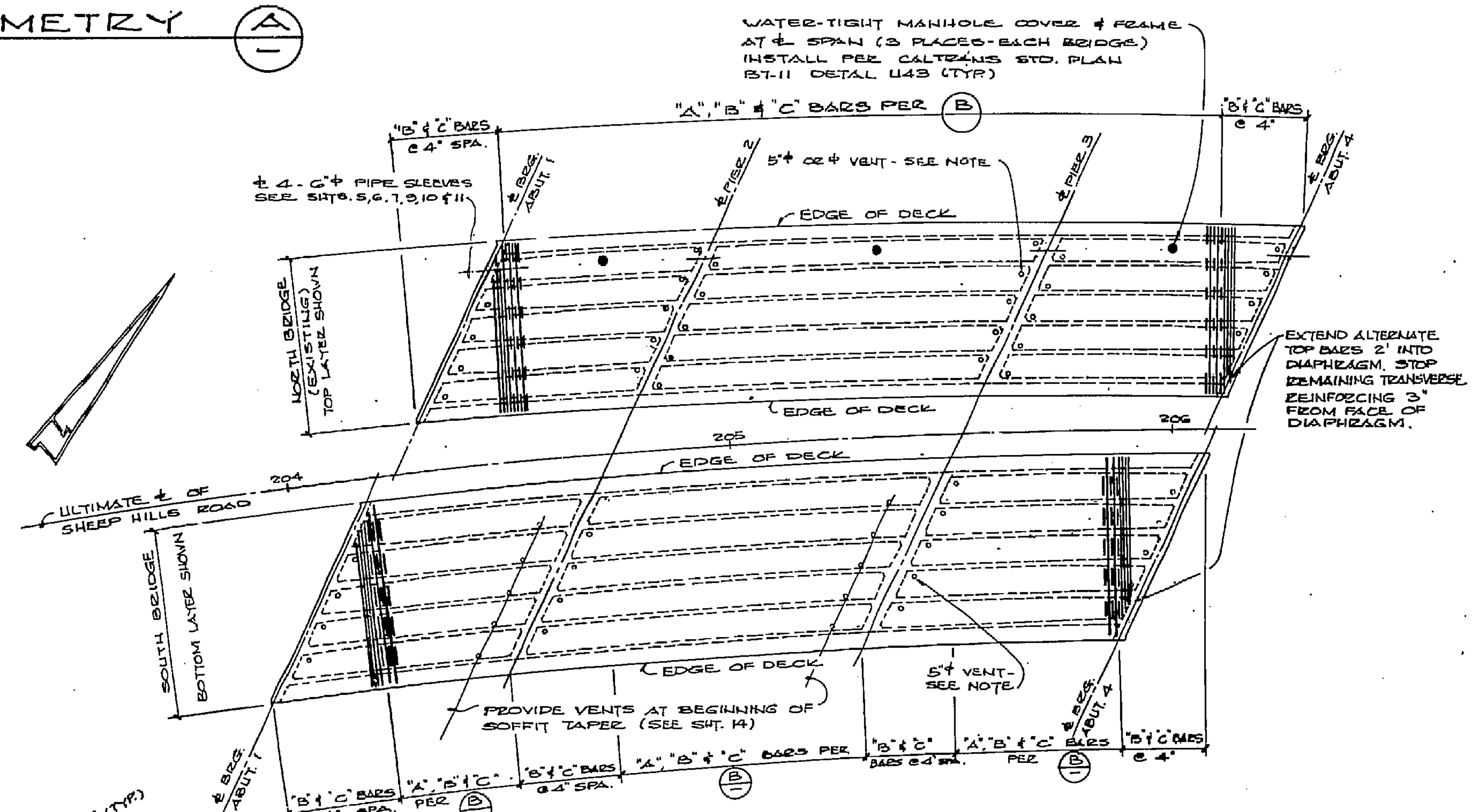

TOP DECK REINFORCEMENT (C)

SCALE 1" = 20'

NOTE:
PROVIDE 5" ⌀ OR ⌀ VENT IN LOWER SLAB. MINIMUM OF TWO VENTS PER SPAN IN EACH BAY BETWEEN GIRDERS. ONE VENT TO BE LOCATED AT LOW POINT OF SPAN AND OTHER VENT TO BE LOCATED AT OPPOSITE END OF SPAN AT 1'-6" FROM FACE OF ABUTMENT OR PIER PER DETAIL (10/15) (OMIT AT LOCATIONS WITH 12" OPENINGS)

SETTLEMENT PIN ELEVATIONS

LOCATIONS	NORTH BRIDGE (EXIST) EAST	NORTH BRIDGE (EXIST) WEST	SOUTH BRIDGE EAST	SOUTH BRIDGE WEST
℄ ABUTMENT 1				
℄ SPAN 1				
℄ PIER 2				
℄ SPAN 2				
℄ PIER 3				
℄ SPAN 3				
℄ ABUTMENT 4				

DESCRIPTION OF DATUM USED

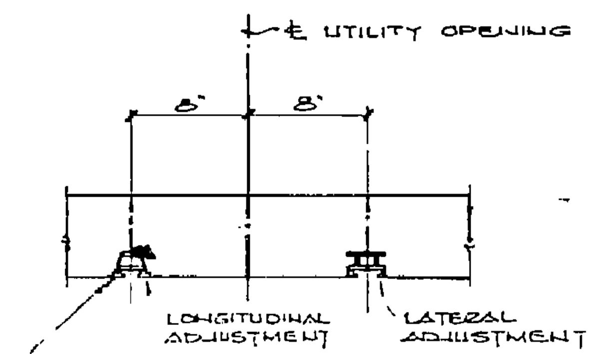

CONCRETE INSERTS @ 8'-0" o.c. (TYP)
GRINNEL FIG 282
CB UNIVERSAL CONCRETE INSERT
OR EQUIVALENT

CONCRETE INSERT (1)

N.T.S.

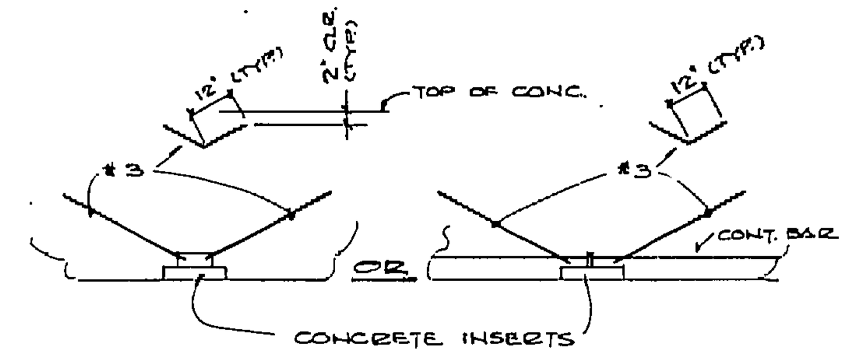

INSERT ANCHOR DETAIL

55C-529 R/L

Jack G. Raub Company
Engineering & Planning

DATE	BY	REVISION DESCRIPTION	APP'D	DATE

PLAN SCALE

DES J.K. | DWN T.U.
CKD M.D.C. | DATE 3/14/84

TYPICAL SECTION
DECK REINFORCEMENT

SHEEP HILLS ROAD BRIDGE
ACROSS ALISO CREEK

SHEET 13 OF 17

JN 213040

I HEREBY CERTIFY THAT THIS IS A TRUE AND ACCURATE COPY OF THE ABOVE DOCUMENT TAKEN UNDER MY DIRECTION AND CONTROL ON THIS DATE IN SACRAMENTO, CALIFORNIA PURSUANT TO AUTHORIZATION BY THE DIRECTOR OF TRANSPORTATION

1-6-88 Donald Blackford

ClibPDF - www.fastio.com

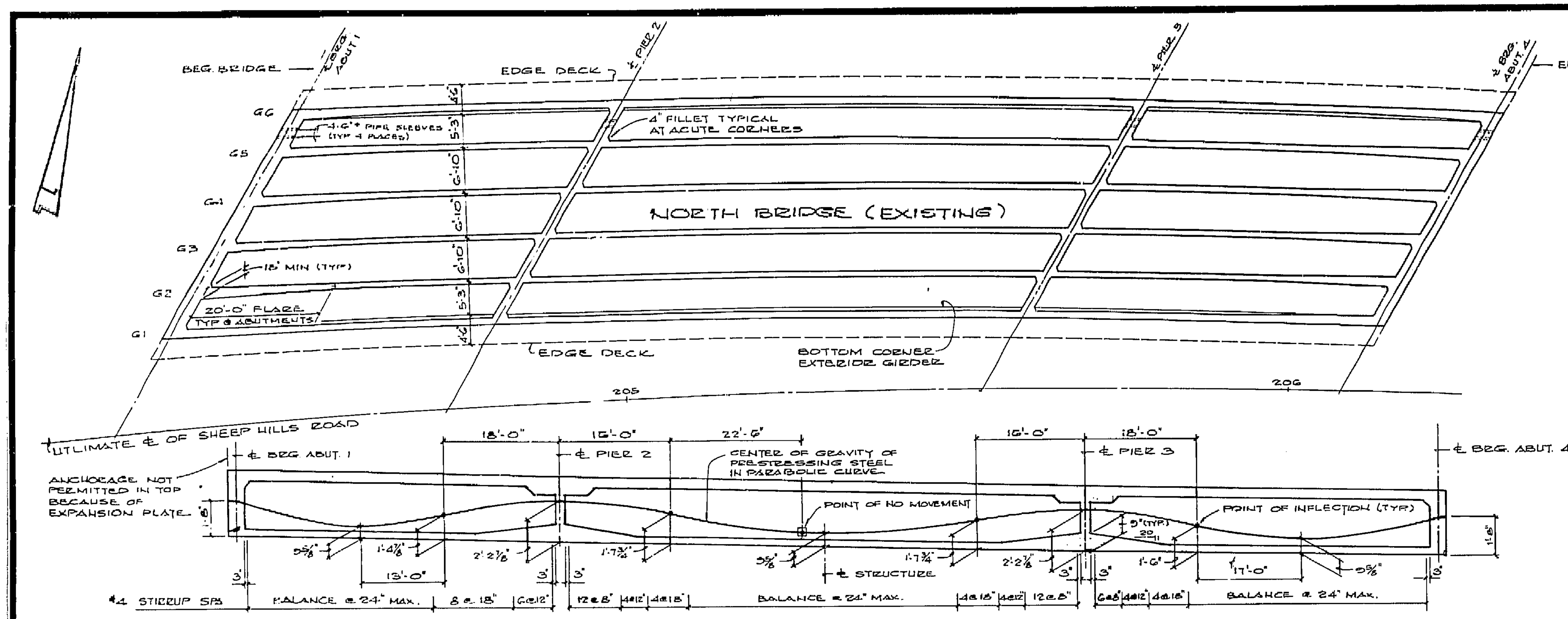

GIRDER LAYOUT PLAN & LONGITUDINAL SECTION - NORTH BRIDGE (A)

SCALE: PLAN 1" = 10' LONGITUDINAL SECTION - HORIZ. 1" = 10' VERT. 1/4" = 1'-0"

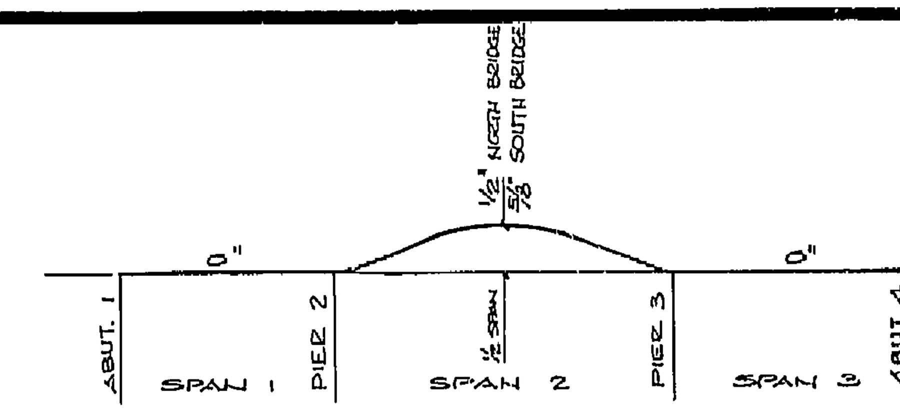

CAMBER DIAGRAM - NORTH & SOUTH BRIDGE

NO SCALE

NOTE:
CAMBER SHOWN DO NOT INCLUDE FALSE WORK SETTLEMENT WHICH SHALL BE ADDED TO THE VALUES NOTED.

PRESTRESSING NOTES

1. PRESTRESS LOSSES:
   - LONG TERM = 34.0 KSI
   - FRICTION COEF(MAX VALUE) = 0.001
   - WOBBLE COEF(MAX VALUE) = 0.20
   - ANCHOR SET(MAX VALUE) = 5/8 INCH
2. JACKING FORCE BEFORE LOSSES:
   - NORTH BRIDGE = 5022 KIPS TOTAL (LOW LAX STRAND)
   - SOUTH BRIDGE = 6100 KIPS TOTAL $A_{s\,min}$ 30.12 SQ. IN.
3. F'c = 4000 PSI F_{ci} = 3500 PSI
4. UNLESS OTHERWISE NOTED ON THE DRAWING, PRESTRESSING FORCES SHALL BE DISTRIBUTED WITH AN APPROXIMATELY EQUAL AMOUNT IN EACH STEM AND SHALL BE PLACED SYMMETRICALLY ABOUT THE CENTERLINE OF THE STRUCTURE.
5. MILD STEEL REINFORCEMENTS INTERFERING WITH THE PRESTRESSING TENDON SHALL BE ADJUSTED IN ORDER TO CLEAR. THE REARRANGEMENTS OF ALL STEEL SHALL BE SHOWN ON THE SHOP DRAWING AND REVIEWED BY ENGINEER.
6. GIRDER STEMS SHALL BE FLARED NEAR ANCHORAGES TO PROVIDE A MINIMUM OF 1 1/2 INCH CONCRETE COVER OVER THE DUCTS. FLARE MAY BE ON ONE SIDE AT THE EXTERIOR STEMS.
7. PLACE DUCT TIES AS SHOWN ON DETAIL 7 OF SHEET 15 AT LOCATION WHERE DUCT CHANGES HORIZONTAL DIRECTION.
8. THE SHOP DRAWING FOR GIRDER SHALL INCLUDE INFORMATION FOR ALIGNMENT OF ALL PRESTRESS TENDON AND MILD STEEL REINFORCEMENTS, ACCOMPANIED WITH SET OF CALCULATION OF ALL LOSSES AND INDICATE THEREIN THE EFFECTIVE PRESTRESS FORCE OVERALL AT EVERY 10TH POINT ALONG EACH SPAN.
9. PRESTRESSING SEQUENCE:
   NO MORE THAN 1/2 OF THE PRESTRESSING FORCE IN ANY STEM SHALL BE STRESSED BEFORE AN EQUAL FORCE IS STRESSED IN THE ADJACENT STEM. AT NO TIME DURING THE STRESSING OPERATIONS SHALL MORE THAN 1/6 OF THE TOTAL PRESTRESSING FORCE BE APPLIED ECCENTRICALLY ABOUT THE CENTERLINE OF THE STRUCTURE.

   TENDONS SHALL BE STRESSED FROM BOTH ENDS OF THE STRUCTURE.

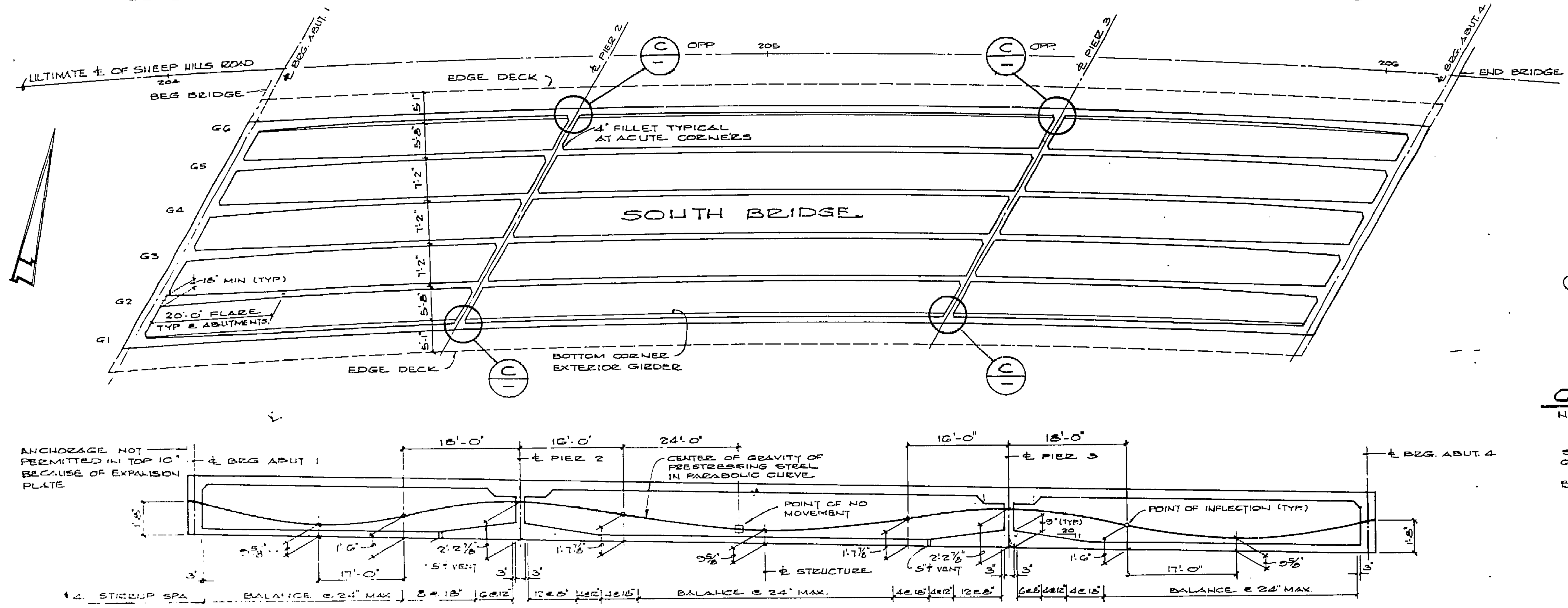

GIRDER LAYOUT PLAN & LONGITUDINAL SECTION - SOUTH BRIDGE (B)

SCALE: PLAN 1" = 10' LONGITUDINAL SECTION - HORIZ 1" = 10 VERT. 1/4" = 1'-0"

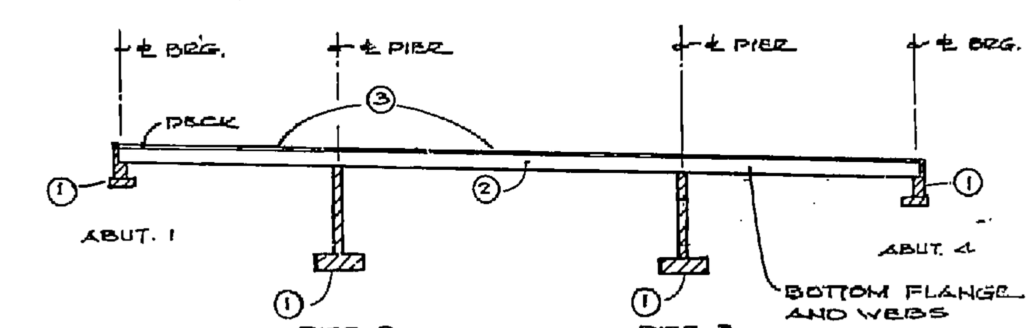

CONCRETE PLACING SEQUENCE

N.T.S. TYPICAL NORTH & SOUTH BRIDGE

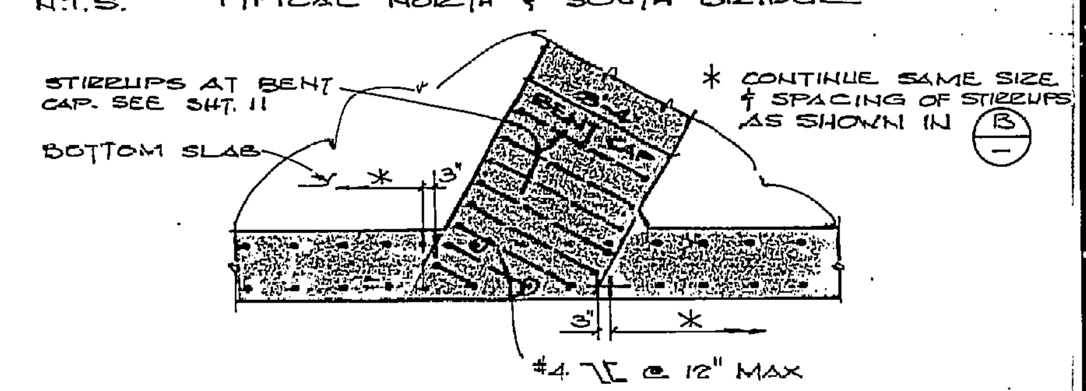

PLAN - SECTION (C)

N.T.S.

55C-529 R/L

Jack G. Raub Company Engineering & Planning	PLAN SCALE	GIRDER LAYOUT & PROFILE
DES J.K. DWN Y.U. CKD M.D.C. DATE 3/14/84		SHEEP HILLS ROAD BRIDGE ACROSS ALISO CREEK
SHEET 14 OF 17		JN 213040

DATE	BY	REVISION DESCRIPTION	APP'D	DATE

A B C D

7-6-88 Donald Blackford

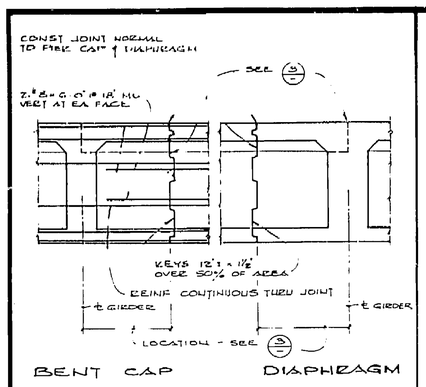

LONG. CONST. JOINT (1)

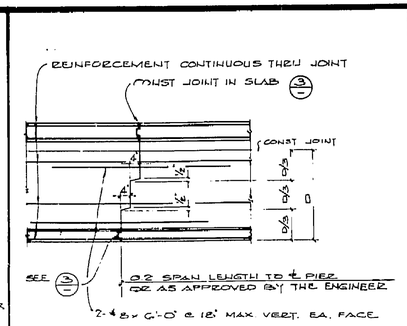

TRANSVERSE CONST. JT. (2)

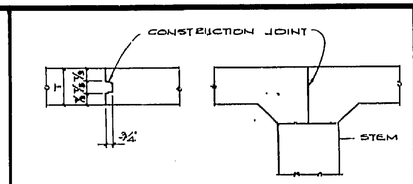

TOP OR BOT. SLAB

DECK PLACING NOTES:
THE CONTRACTOR SHALL SUBMIT A DECK PLACING SCHEDULE WHICH WILL BE SUBJECT TO THE REVIEW OF THE ENGINEER.
UNLESS SHOWN OTHERWISE ON THE PLANS, THE FOLLOWING CONDITIONS SHALL BE PROVIDED FOR.
1- TRANSVERSE JOINTS MAY BE LOCATED AT ABOUT ¼ POINT OF SPAN, BETWEEN STEMS
2- LONGITUDINAL JOINTS SHALL BE LOCATED AT THE EDGE OF A TRAFFIC LANE UNLESS OTHERWISE PERMITTED BY THE ENGINEER.
3- REINFORCING STEEL SHALL BE CONTINUOUS THRU ALL CONSTRUCTION JOINTS.

SLAB CONST. JOINT (3)

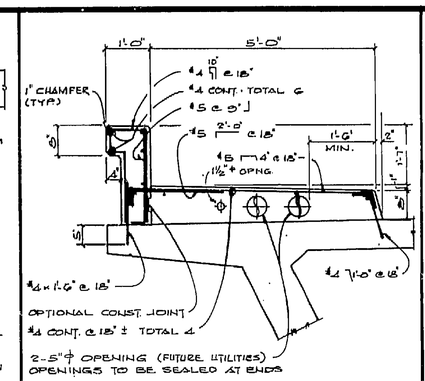

SIDEWALK - ON DECK (4)

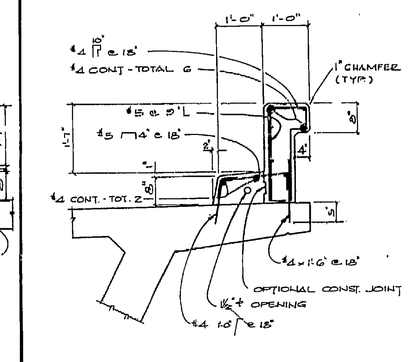

CURB - ON DECK (5)

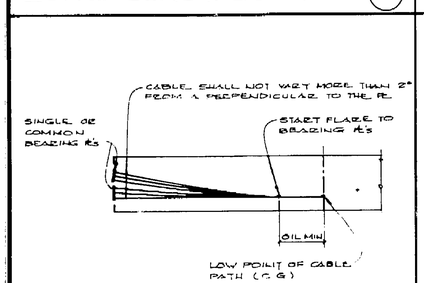

NOTE: SUFFICIENT POINTS TO BE SHOWN ON TENDON PROFILE TO PLACE DUCTS ACCURATELY

BEARING ℄ P.S. PATH (6)

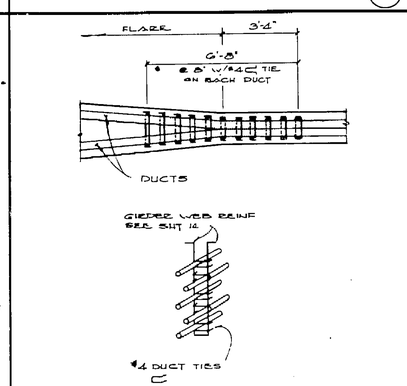

STIRRUP REINF. AT FLARE (7)

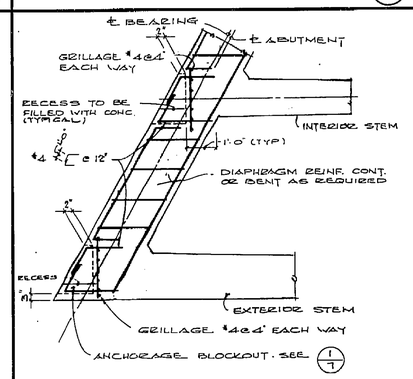

PLAN - P.S. BEARING SEATS (8)

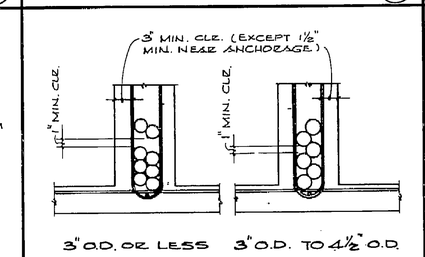

NOTES:
1- DUCT PATTERNS SHOWN ARE FOR 12" WIDE GIRDER STEM. FOR OTHER WIDTHS THE MINIMUM CLEARANCE MUST BE MAINTAINED.
2- GIRDER STIRRUPS MUST BE BENT TO FIT THE DUCT SIZE USED, OR "J" OR "D" STIRRUPS MAY BE USED. A REINFORCING BAR MUST BE PLACED INSIDE OF EACH STIRRUP HOOK OR 90° BEND.

CLEARANCE FOR DUCTS (9)

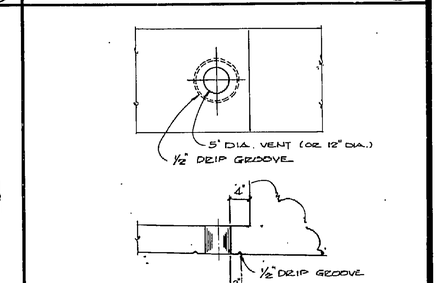

NOTE:
5" DIA. VENT IN LOWER SLAB. (OR 12" DIA.) MINIMUM OF 2 VENTS PER SPAN IN EACH BAY BETWEEN GIRDERS. ONE VENT TO BE LOCATED AT LOW POINT OF SPAN AND OTHER VENT TO BE LOCATED AT OPPOSITE END OF SPAN @ 1'-0" FROM FACE OF ABUTMENT OR PIER.

VENT DETAIL (10)

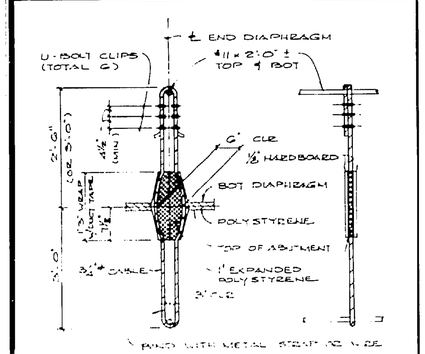

VERTICAL RESTRAINER (11)

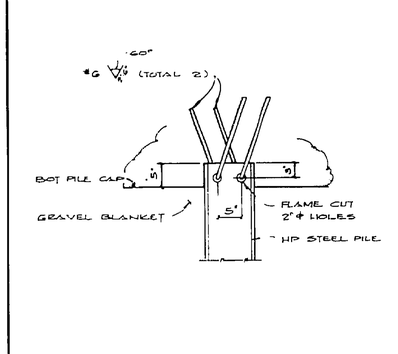

PILE ANCHOR (12)

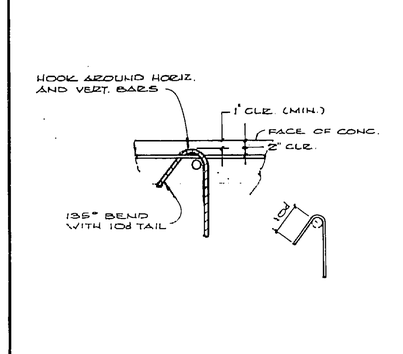

TIE BAR DETAIL (13)

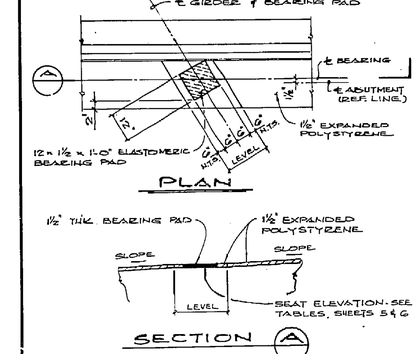

ELASTOMERIC PAD (14)

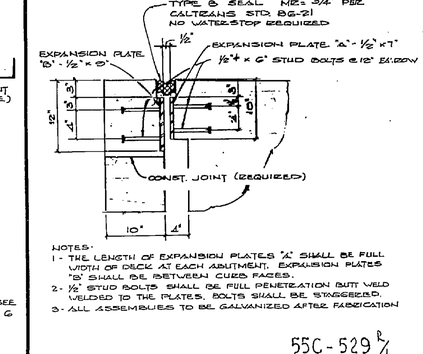

NOTES:
1- THE LENGTH OF EXPANSION PLATES "A" SHALL BE FULL WIDTH OF DECK AT EACH ABUTMENT. EXPANSION PLATES "B" SHALL BE BETWEEN CURB FACES.
2- ½" STUD BOLTS SHALL BE FULL PENETRATION BUTT WELD WELDED TO THE PLATES. BOLTS SHALL BE STAGGERED.
3- ALL ASSEMBLIES TO BE GALVANIZED AFTER FABRICATION

55C-529 ℄

EXPANSION PLATES (15)

Jack G. Raub Company
Engineering & Planning

DATE	BY	REVISION DESCRIPTION	APP'D	DATE

PLAN SCALE
DES J.K. DWN T.U.
CKD M.D.C. DATE 3/14/64

MISCELLANEOUS DETAILS

SHEEP HILLS ROAD BRIDGE
ACROSS ALISO CREEK

SHEET 15 OF 17

IN 213040

ClibPDF - www.fastio.com

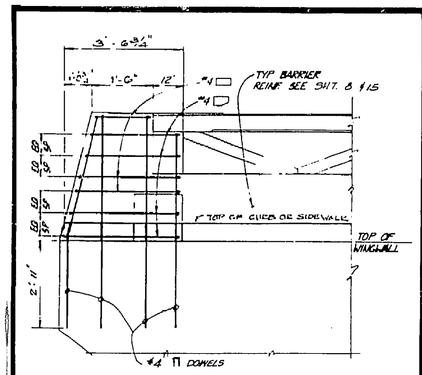

END POST - REINF. (1)

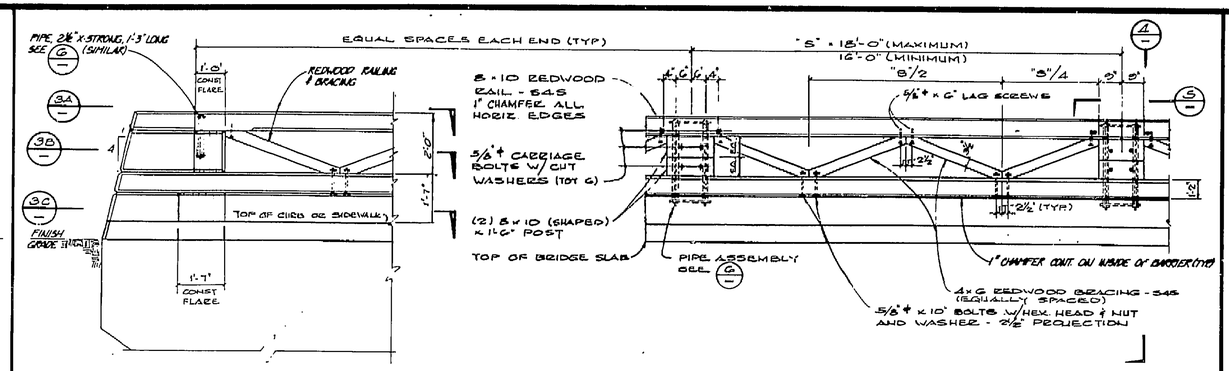

EXTERIOR ELEVATION - END POST & RAILING (2)

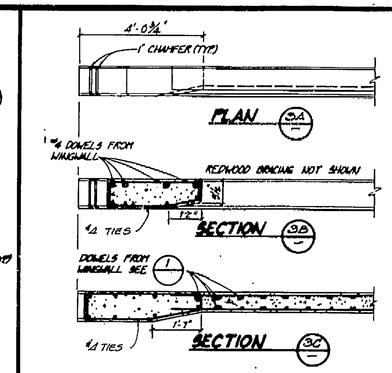

PLAN - SECTION (3)

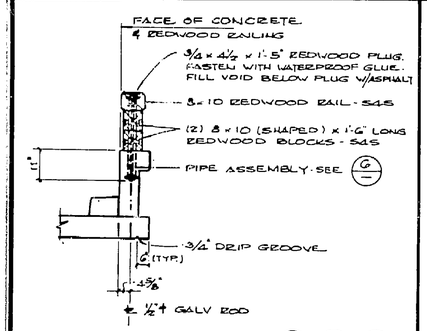

NOTE: FOR INFO NOT SHOW SEE (2) (4/15) (5/15)

SECTION (4)

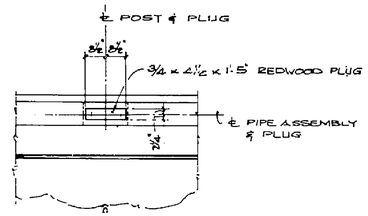

PLAN (5)

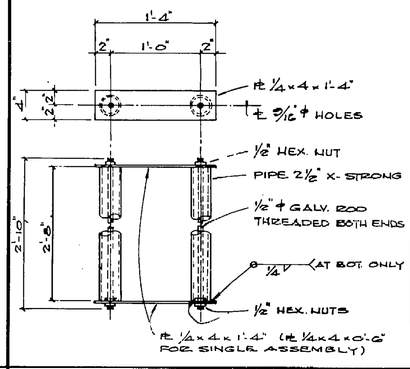

PIPE ASSEMBLY (6)

1. RAILING SHALL CONFORM TO HORIZONTAL AND VERTICAL ALIGNMENT.
2. POSTS SHALL BE NORMAL TO RAILING.
3. COUNTERSINK ALL LAG SCREWS AND BOLTS AT TIMBER CONNECTIONS.
4. WALLS ARE TO BE BACKFILLED BEFORE RAILING IS PLACED.
5. REDWOOD POSTS, RAILS AND BRACINGS SHALL BE SELECT HEART GRADE REDWOOD.
6. ALL TIMBER CONNECTORS SHALL BE GALVANIZED.

GENERAL NOTES (7)

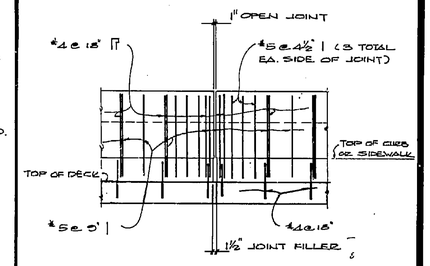

NOTES:
CURB AND WALL JOINTS TO BE LOCATED AT ALL ℄ PIERS AND UNIFORM SPACING (40' MAX.)

CURBS AND RAILINGS SHALL BE PLACED AFTER BRIDGE IS STRESSED.

OPEN JOINT AT BARRIER (8)

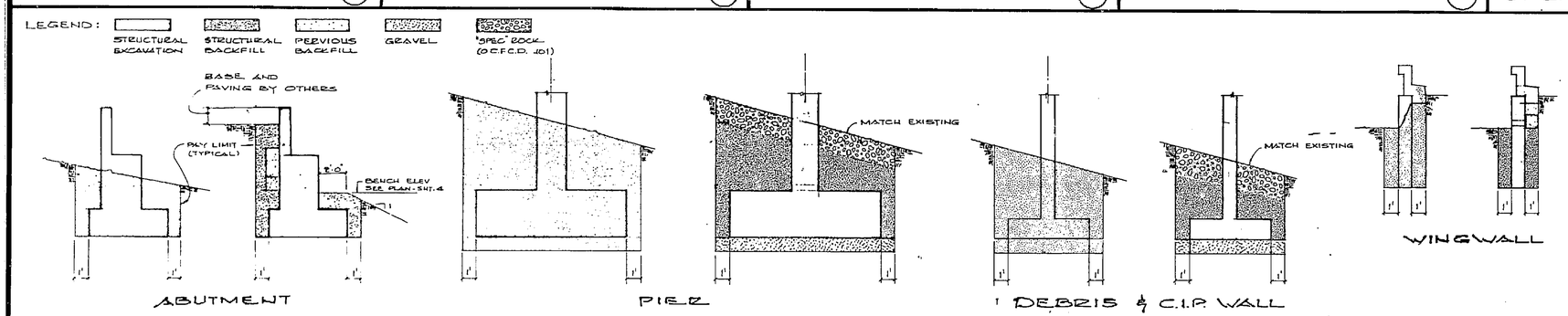

55C-529 R/L

STRUCTURAL EXCAVATION & BACKFILL (9)

Jack G. Raub Company
Engineering & Planning

DATE	BY	REVISION DESCRIPTION	APPD	DATE

PLAN SCALE
DES J.K. DWN T.U.
CKD M.D.C. DATE 3/14/64

MISCELLANEOUS DETAILS

SHEEP HILLS ROAD BRIDGE ACROSS ALISO CREEK

SHEET 16 OF 17

IN 213040

I HEREBY CERTIFY THAT THIS IS A TRUE AND ACCURATE COPY OF THE ABOVE DOCUMENT TAKEN ALL OR PART FROM ARCHIVES LOCATED ON THIS DATE IN SACRAMENTO, CALIFORNIA PURSUANT TO A REQUEST UNDER THE PUBLIC RECORDS INFORMATION ACT.
11-6-88 Ronald Blackford SUPERVISOR OF RECORDS AND ARCHIVES

ClibPDF - www.fastio.com

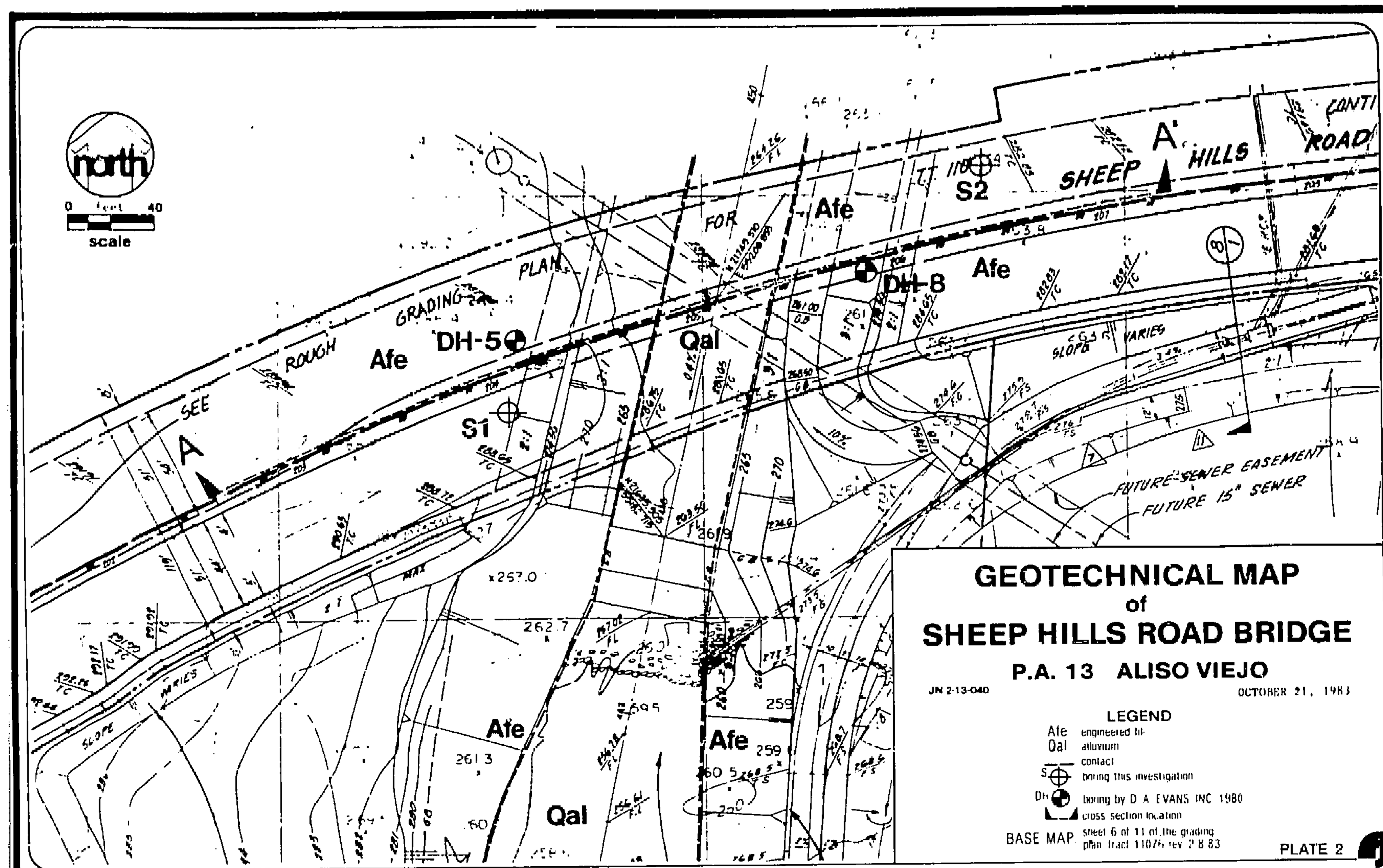

Geotechnical Boring Log — Boring Number S-1

DATE DRILLED	ENG / GEO	LOCATION	ELEVATION & DATUM	BASEMAP	BORING NUMBER
6/16/83	ENG Steve Milazzo; GEO	Sheep Hills Road Bridge	289' above mean sea level		S-1

DRILL RIG	BORING DIAMETER	
2-R Drilling Hollow Stem	8"	This log is a representation of subsurface conditions at the time & place of drilling. With the passage of time or at any other location there may be consequential changes in conditions.

Depth (feet)	Elevation	Geologic Description (Remarks)	Sample Number and Type	Blows per Foot	Engineering Classification Description (Remarks)	Moisture (% of Dry Weight)	Dry Unit Weight (PCF)	Lab Tests
		Engineered Fill (ef)			Silty Clay (CL) dark brown, very moist, stiff.			
	285				Sandy Clay (CL), medium brown, very moist, stiff.			
5			D-1 B-1	17		16	111	DS CBDM
			B-2					CBDM
	280							
10			D-2	39		6	117	
					Sand (SP) with clay, yellow brown, damp, medium coarse, medium dense.			
			B-3					
	275							
15			D-3	39	Clayey Silt (ML), yellow brown, brown, and red brown, mottled, wet, very stiff, ¼" diameter siltstone fragments abundant, sandstone fragment in sampler tip.	26	95	DS
	270	Alluvium (Qal)			Silty Sand (SM), light brown, damp, medium dense to dense, fine grained.			
20			D-4	61		6	124	
			SPT-1	13	Clayey Silt (ML), yellow brown, moist, stiff to very stiff.	34	—	
	265							
25			D-5	17	Clayey Sand (SC), light brown, moist, loose to medium dense, medium coarse.	13	111	GS AL
	260							
30		Alluvium (Qal)	D-6	48	Silty Clay (CL), with sand, brown, very moist, soft to medium stiff, layers to 1/8" thickness, occasional pebbles to 1/8" diameter. Rock in sampler tip prohibited good sample recovery and may have affected blow count.	17	—	
	255							
35			D-7	56	¼" fragments of common red brick mixed with soil at 35'. Rock in sampler tip prohibited good sample recovery.	18	—	
	250							
40			SPT-2	41	Free-water in soil at 40'. Siltstone fragment in sampler tip.	23	—	
	245							
45				100	Very hard red rock in sampler, no sample recovery.			
		Monterey Siltstone (Tm)	SPT-3	14	Clayey Silt (MH), green gray, stiff, wet, massive, diatomaceous.	69	—	
	240							
50			D-8	62		83	50	CN
			D-9	76 (11")	Becoming dark gray at 51', wet and hard.	69	—	
	235							
55								
	230		D-10	120 (4½")	Sample recovery limited to 2 rings.	75	55	
					Bottom of hole @ 59'. Water level after 30 min. @ 29½'. Hole backfilled.			

Jack G. Raub Company
Engineering & Planning

jn 2-13-040 fig B-1.2

geotechnical boring log

B-5

Geotechnical Boring Log — Boring Number S-2

DATE DRILLED	ENG / GEO	LOCATION	ELEVATION & DATUM	BASEMAP	BORING NUMBER
6/17/83	ENG Steve Milazzo; GEO	Sheep Hills Road Bridge	282' above mean sea level		S-2

DRILL RIG	BORING DIAMETER	
2-R Drilling Hollow Stem	8"	This log is a representation of subsurface conditions at the time & place of drilling. With the passage of time or at any other location there may be consequential changes in conditions.

Depth (feet)	Elevation	Geologic Description (Remarks)	Sample Number and Type	Blows per Foot	Engineering Classification Description (Remarks)	Moisture (% of Dry Weight)	Dry Unit Weight (PCF)	Lab Tests
		Engineered Fill (ef)			Sandy Clay (CL), brown, dark brown, yellow brown, mottled, very moist to wet, stiff to very stiff, sandstone fragments to 1" diameter.			
	280							
5			D-1	20		24	100	DS
	275							
10			D-2	80 (10½")	Becoming hard at 10'.	11	118	
	270							
15		Alluvium (Qal)	D-3	64	Layers of Sand (SP) and Sand (SW), approximately 1" thick, dense, medium coarse, damp to moist.	8	113	DS
	265							
20			D-4	14	Sand (SP), brown and yellow brown, coarse, loose to medium dense, very moist to wet.	17	108	
	260							
25				20				
	255							
30		Alluvium (Qal)	SPT-1	4	Silty sand (SM), with clay, very fine, saturated, very loose, brown, with some pebbles to ¼" diameter.	8	—	
	250							
35			D-5	12	Saturated, loose to medium dense.	23	104	GS AL DS
	245				Sand (SW), yellow brown, saturated, loose to medium dense, fine to medium coarse, with pebbles to ¼" diameter.			
40				46	No sample recovery. Repeated attempts. Sample distorted during extraction.			
	240							
		Monterey Siltstone (Tm)			Clayey Silt (MH), green-gray, wet, stiff to very stiff, fractures coated with FeO.			
45			D-6 D-7	27		58 73	66 58	DS CN
	235							
50				112	No sample recovery. Repeated attempts. Sample distorted during extraction.			
	230							
55			D-8	60	Saturated, hard.	72 38	59 —	
	225		SPT-2	26				
					Bottom of hole at 57'. Water level after one hour at 21'. Hole backfilled.			

Jack G. Raub Company
Engineering & Planning

jn 2-13-040 fig B-2.2

geotechnical boring log

B-7

55C-529 R/L

Jack G. Raub Company, Engineering & Planning	DATE / BY / REVISION DESCRIPTION / APP'D / DATE	PLAN SCALE; DES / DWN / CKD / DATE	BORING LOG	SHEEP HILLS ROAD BRIDGE ACROSS ALISO CREEK	SHEET 17 of 17; JN 213040

A B C D

I HEREBY CERTIFY THAT THIS IS A TRUE AND ACCURATE COPY OF THE ABOVE DOCUMENT TAKEN UNDER MY DIRECTION AND CONTROL ON THIS DATE IN SACRAMENTO, CALIFORNIA PURSUANT TO AUTHORIZATION BY THE DIRECTOR OF TRANSPORTATION
1-6-88 Donald Blackford
SUPERVISOR OF MICROFILM SERVICES

ClibPDF - www.fastio.com