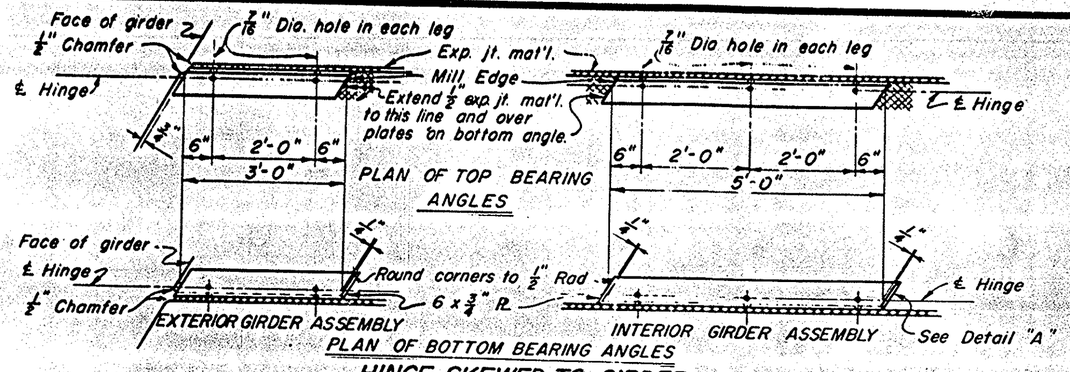

HINGE SKEWED TO GIRDER

Scale: 3/4" = 1'-0"

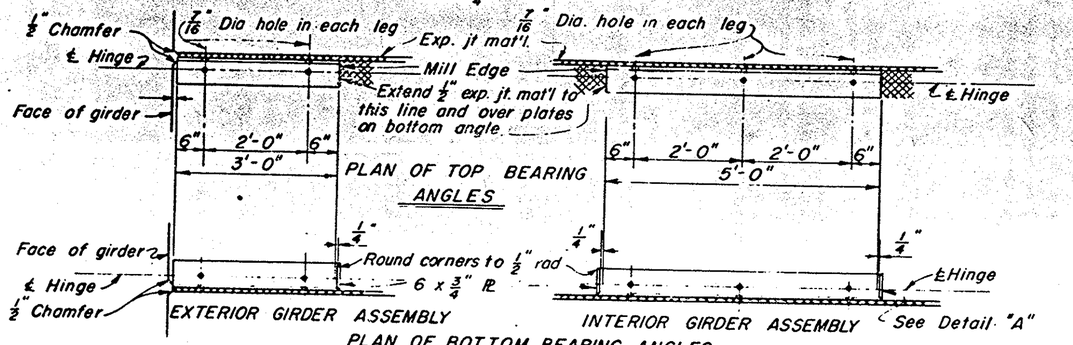

HINGE NORMAL TO GIRDER

Scale: 3/4" = 1'-0"

Exterior Assembly Max. shear for 3'-0" long angle = 151k

Interior Assembly Max. shear for 5'-0" long angle = 252k

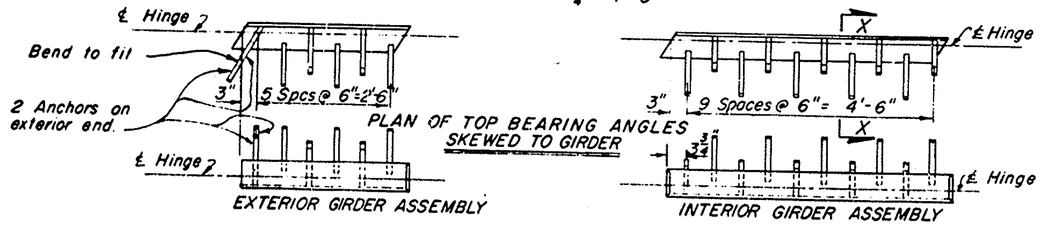

STRAP ANCHORS

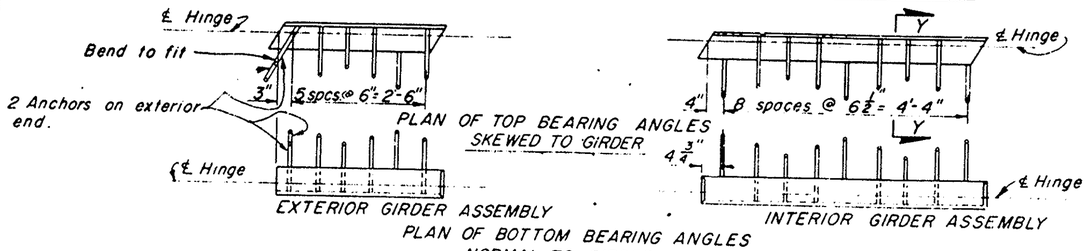

STUD ANCHORS

ANCHOR ALTERNATIVES

Scale: 3/4" = 1'-0"

To provide for free movement of the completed hinge, abutting surfaces of steel and concrete are to be separated with expansion material. Caulk and tape the joints between steel angles and all remaining openings to prevent grout or concrete seepage between abutting surfaces of hinge.

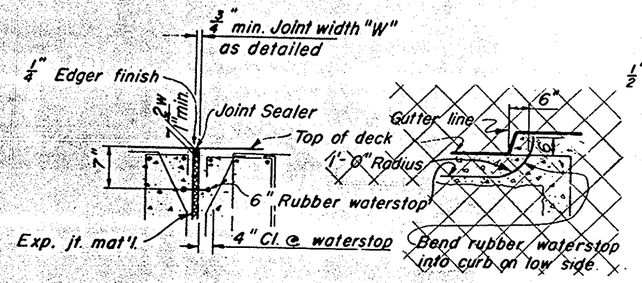

DETAIL OF RUBBER WATERSTOP

No Scale

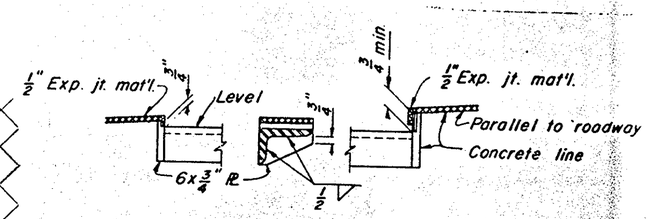

DETAIL "A"

Scale: 1 1/2" = 1'-0

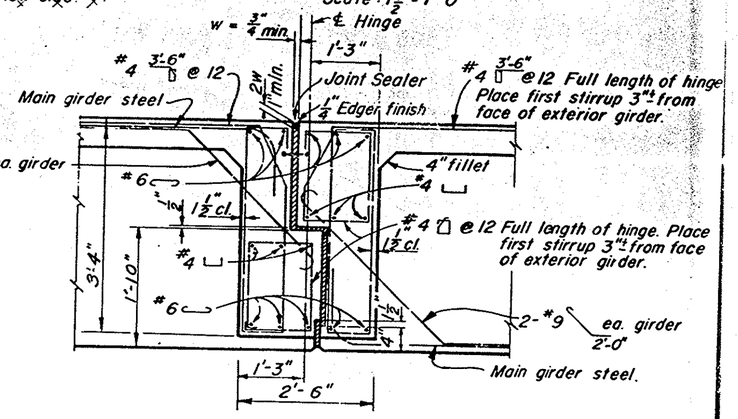

TYPICAL EXPANSION HINGE

Scale: 3/4" = 1'-0"

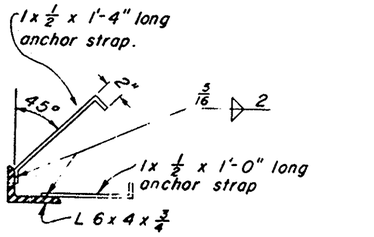

SECTION X-X

Scale: 1 1/2" = 1'-0"

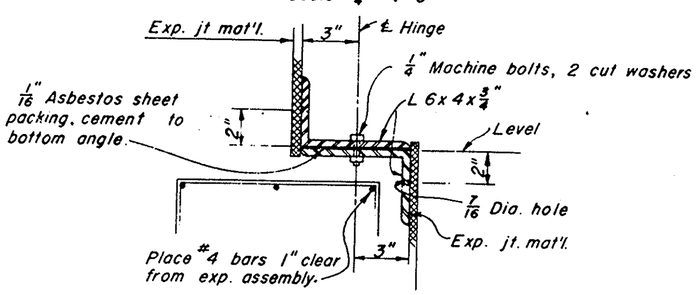

SECTION THRU EXPANSION ASSEMBLY

Scale: 3" = 1'-0"

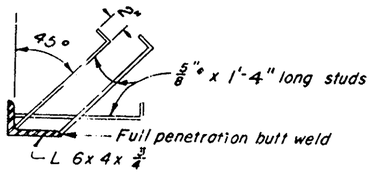

SECTION Y-Y

Scale: 1 1/2" = 1'-0"

Galvanize hinge assembly after fabrication

NOTE:

ALL REQ'D HINGE ASSEMBLIES SKEWED TO GIRDERS.

INTERIOR GIRDER ASSEMBLIES @ 9°-05'	—	2 REQ'D.
EXTERIOR GIRDER ASSEMBLIES @ 9°-05'	—	2 REQ'D.
INTERIOR GIRDER ASSEMBLIES @ 4°-53'	—	2 REQ'D.
EXTERIOR GIRDER ASSEMBLIES @ 4°-53'	—	2 REQ'D.

REFER TO SHEET 6 FOR DIRECTION OF SKEW.

SA 30 Bridge
Wintersburg Ave.
Sheet 8 of 13
Red. Ratio 25.5:1
Scale As Noted
Brownline

ORANGE COUNTY HIGHWAY DEPARTMENT

WINTERSBURG BRIDGE ACROSS SANTA ANA RIVER

HINGE DETAILS

SHEET 8 OF 13

MICROFILMED JUN 18 1962

Sheet 8 of 13

SA-30