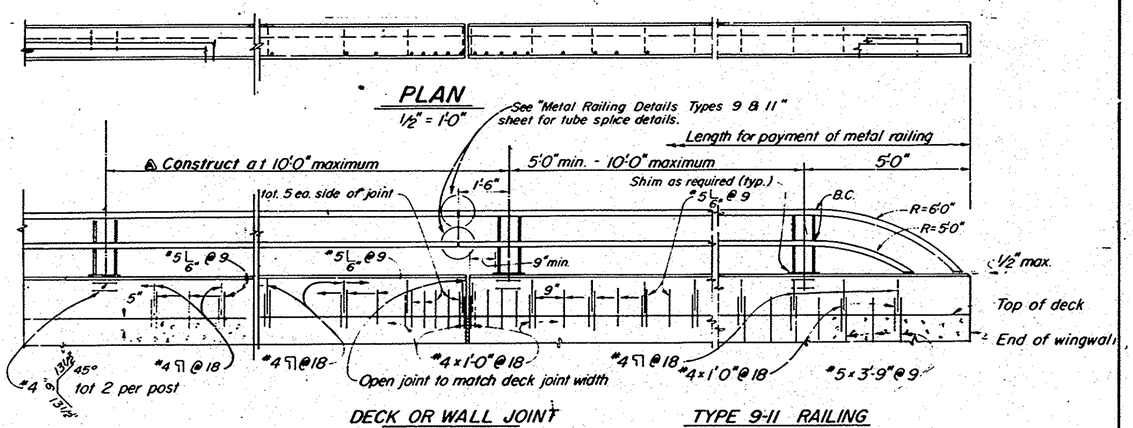

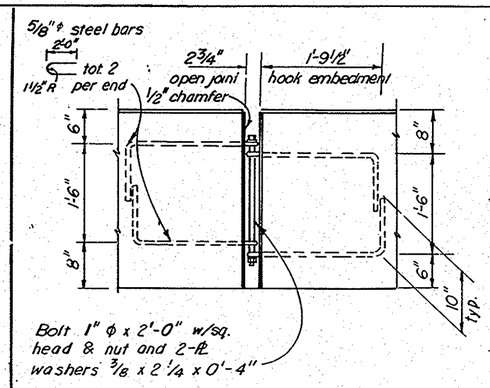

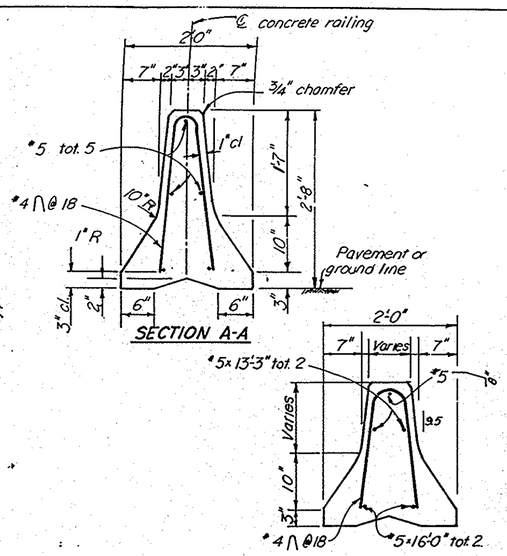

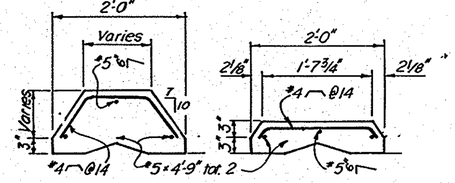

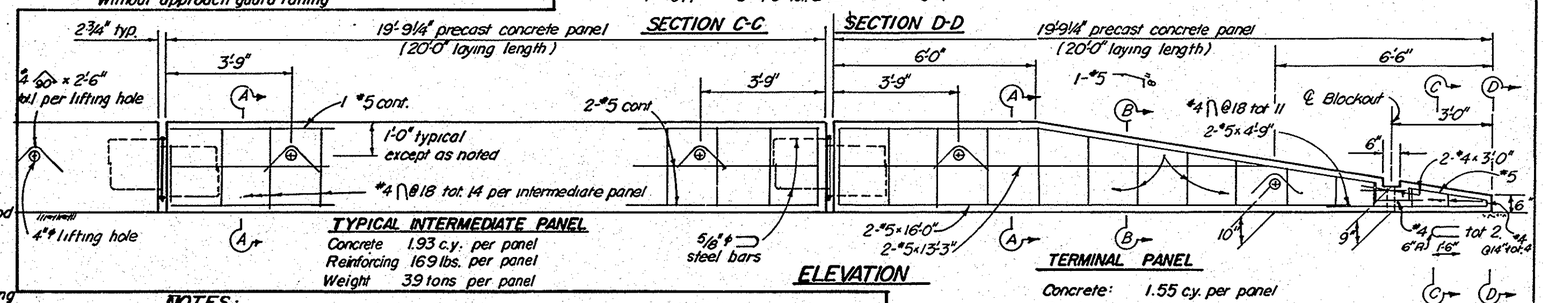

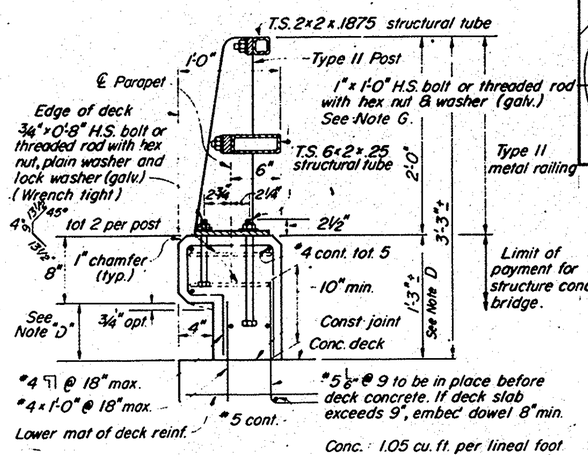

NOTES:

A. Tubing shall be shop bent or fabricated to fit horizontal curve when radius is less than 950'.
B. Posts shall be normal to railing.
C. Tube splice shall be located in the tube spanning deck joints. Increase joint width in tube to match deck opening and increase sleeve length correspondingly.
D. Dimensions will vary with cross slope and with certain thicknesses of surfacing. See bridge plans.
E. Walls are to be backfilled before railing is placed.
F. Clearance to reinforcing steel in curb and railing to be 1". Longitudinal reinforcement to stop at all joints.
G. High strength rods threaded both ends with 2 nuts and washers (all galv.) may be substituded for high strength anchor bolts.
H. Torque rail to post nuts to 175 ft lbs. Exception (2x2 tube is wrench tight.)
I. Tubing shall be continuous over not less than two posts except a short length is permitted near deck joints, electroliers or other railing discontinuities.
J. Galvanize rail assembly after fabrication.
K. Locate pull box near mid-point between posts, but not in same panel as deck joints or electroliers.

Dr. 8 12952
Street Improvements
Sheet 24 of 35
Red 24;1
Cronaflex

TEMPORARY RAILING TYPE K

MARK	DATE	DESCRIPTION
A	3-61	

REVISIONS

ORANGE COUNTY
ENVIRONMENTAL MANAGEMENT AGENCY

TUSTIN AVE. BRIDGE
SA-7A
AT SANTA ANA RIVER

TEMPORARY TYPE-K
& 9-11 RAILING DETAILS

DESIGNED M.A. DRAWN KKP CHECKED MA
PREPARED UNDER SUPERVISION OF M. A. Hardy DATE
SCALE AS SHOWN DATE DWG. NO.
SHEET 24/35

Dr. 8 12952