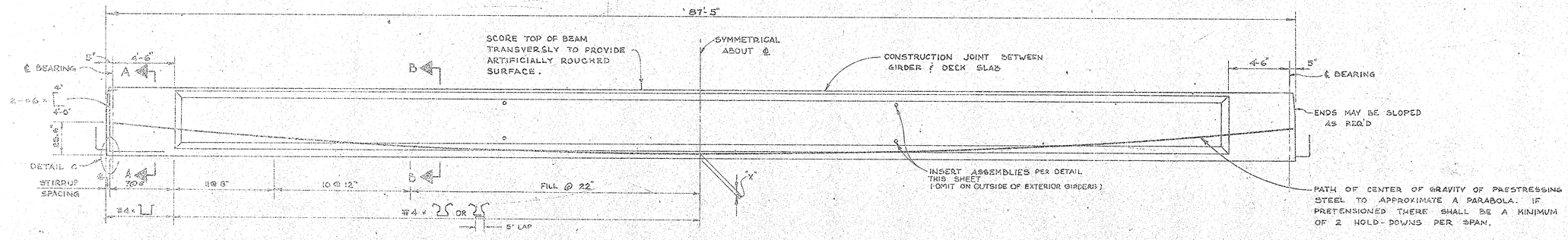

* 3" FOR PRETENSIONING

ELEVATION

SCALE: 1/4" = 1'-0"

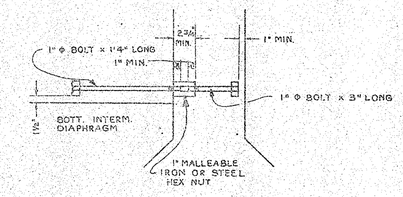

INSERT ASSEMBLY DETAIL

NO SCALE

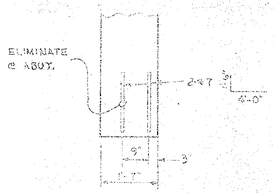

BAR SPACING DETAIL

SCALE: 1/2" = 1'-0"

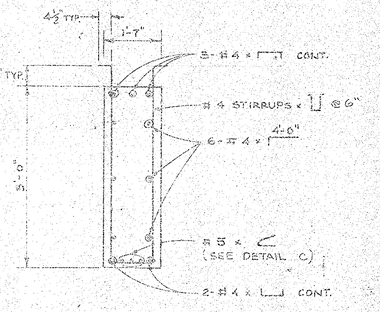

SECTION A-A

SCALE: 1/2" = 1'-0"

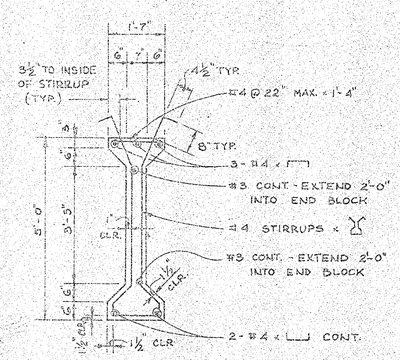

SECTION B-B

SCALE: 1/2" = 1'-0"

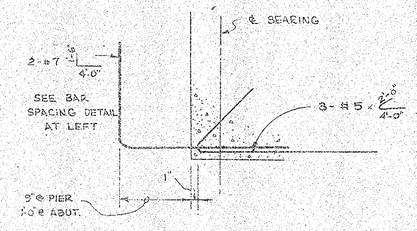

DETAIL C

SCALE: 1" = 1'-0"

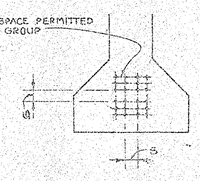

CLEARANCE FOR PRETENSIONED STRANDS

SEE NOTES

CLEARANCE FOR PRETENSIONED STRANDS

1. STRANDS MAY BE BUNDLED IN GROUPS CONSISTING OF 3 VERTICALLY AND 2 HORIZONTALLY AND SEPARATED AT THE ENDS.
2. THE MIN. DISTANCE "S" BETWEEN GROUPS OF INDIVIDUAL STRANDS IS 1 1/2" FOR 3/8" STRANDS, 1 3/4" FOR 7/16" STRANDS AND 2" FOR 1/2" STRANDS.
3. "S" IS MEASURED BETWEEN CENTERS OF ADJACENT STRANDS.
4. APPROVAL OF ENGINEER IS REQUIRED FOR DEVIATION.

GIRDER LENGTH	Pf = WORKING FORCE, KIPS		CONCRETE STRENGTH, PSI
	"X"	PRE-TEN.	PRE-TEN.
87'-5"	3.5"	605K	f'_{ci} = 4100
	5.5"	640K	

PRESTRESSING NOTES

WORKING FORCE (Pf): THE FORCE PER GIRDER REMAINING AFTER ALL LOSSES. SEE STANDARD SPECIFICATIONS.

CONCRETE STRENGTH: f'_{ci} IS AT TIME OF INITIAL STRESSING. f'_c IS AT 28 DAYS. } = 4100 PSI

PRESTRESSING STEEL: SEE STANDARD SPECIFICATIONS.

CAMBER: SEE CAMBER DIAGRAM, SHT. 13.

SCREED LINES FOR CONSTRUCTION WILL BE DETERMINED BY ENGINEER.

ORANGE COUNTY ROAD DEPARTMENT

SEVENTEENTH STREET BRIDGE
SA-20
ACROSS SANTA ANA RIVER

PRESTRESSED GIRDERS

Drawn: S.D.V. Checked: J.B. Approved: W.H.J. Date: 1-11 Rev. 5-76

SCALE: AS SHOWN

SHEET 11 OF 20

DR 17 (12215)