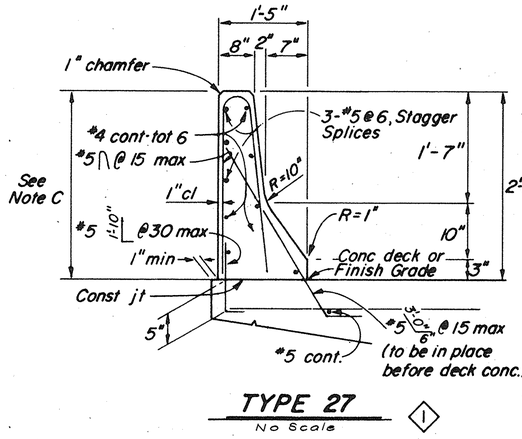

TYPE 27
No Scale
1

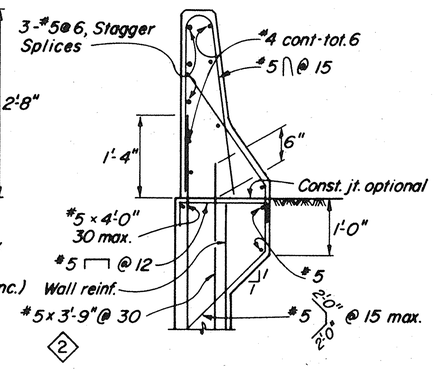

2

TYPE 27A
No Scale

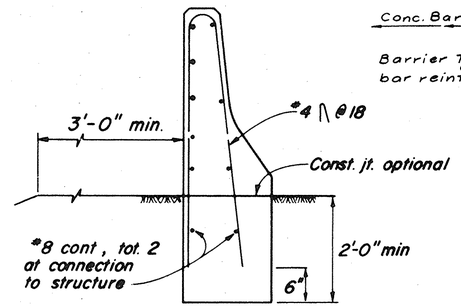

TYPE 27B
No Scale

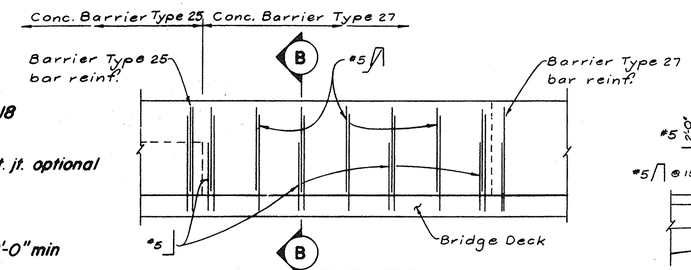

ELEVATION A-A
TRANSITION CONCRETE BARRIER
1/2" = 1'-0"

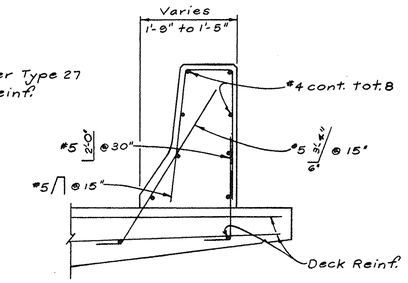

SECTION B-B
3/4" = 1'-0"

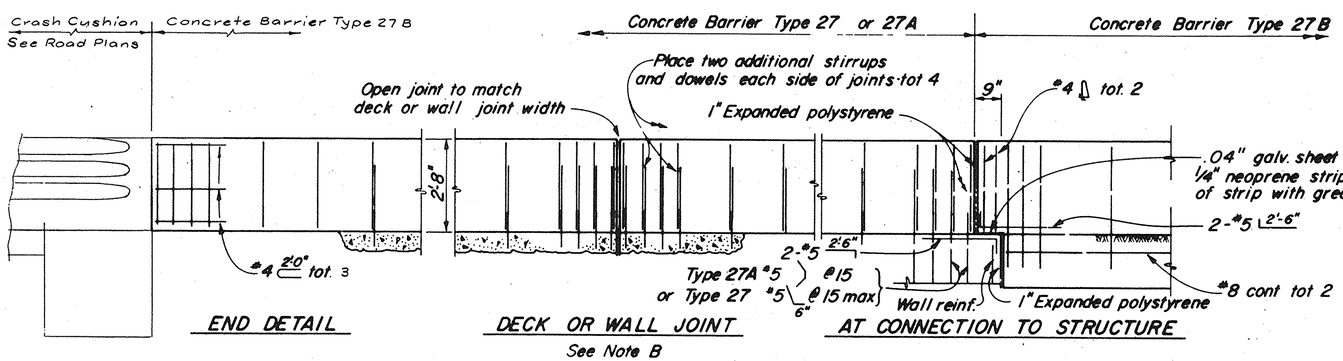

ELEVATION
Scale: 1/2" = 1'-0"

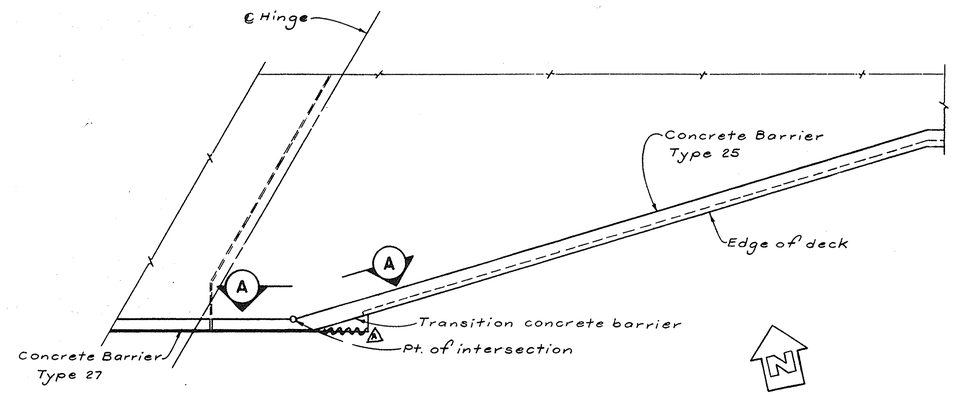

PLAN
TRANSITION CONCRETE BARRIER
1/8" = 1'-0"

NOTES:

A. Clearance to reinforcing steel in railing to be 1". Longitudinal reinforcement to stop at expansion joints, and be continuous at construction joints. Hairpin stirrups to be rotated to meet clearance.

B. Rail joints shall be located at deck and principal wall joints.

C. Dimension may vary with cross-slope and with certain thicknesses of surfacing. See Bridge Plans.

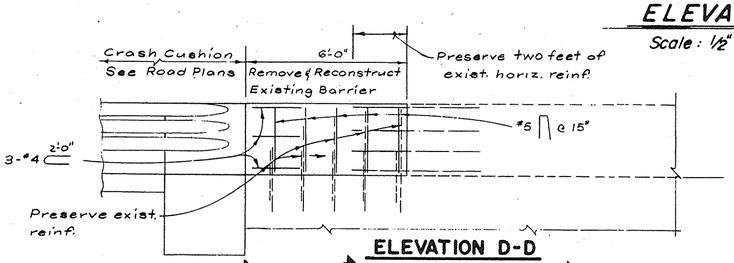

ELEVATION D-D
3/8" = 1'

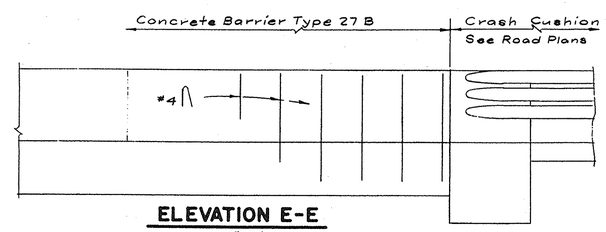

ELEVATION E-E
3/8" = 1'

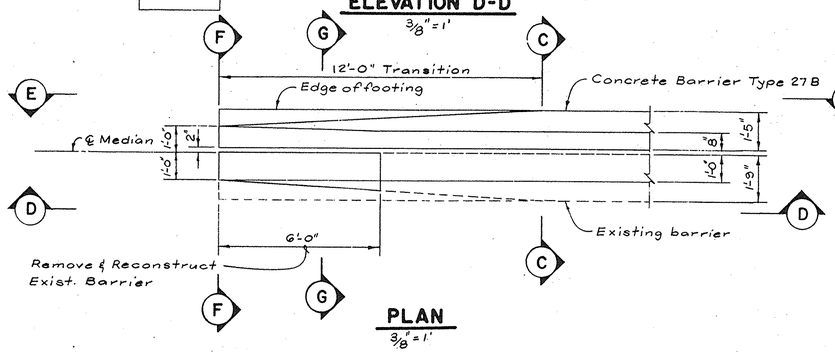

PLAN
3/8" = 1'

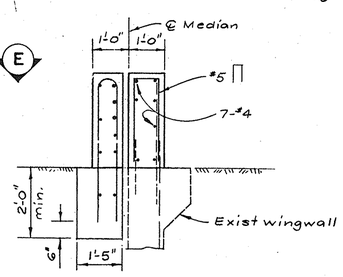

SECTION F-F
1/2" = 1'

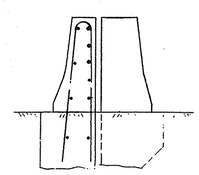

SECTION G-G
1/2" = 1'

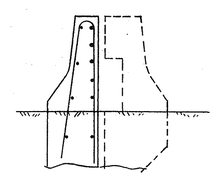

SECTION C-C
1/2" = 1'

REGISTERED PROFESSIONAL ENGINEER
W. MARK ASHLEY
No. C 34299
Exp. 9-30-91
CIVIL
STATE OF CALIFORNIA

AS BUILT 3-93 SCH

McDANIEL ENGINEERING COMPANY, INC. 3990 OLD TOWN AVE., SUITE 207B, SAN DIEGO, CA 92110 · (619)692-1920	DESIGNED BY WMA	SANTA MARGARITA PARKWAY BRIDGE OVER ARROYO TRABUCO - WIDENING	SHEET 40 OF 57 SHEETS
	DRAWN BY RLA		
	CHECKED BY JCC	CONCRETE BARRIER TYPE 27	
APPROVED BY W. Mark Ashley R.C.E. C 34299 EXPIRES 9-30-91 DATE 6 28 89	FIELD BOOK		JOB NO.

DR 19 15DGG