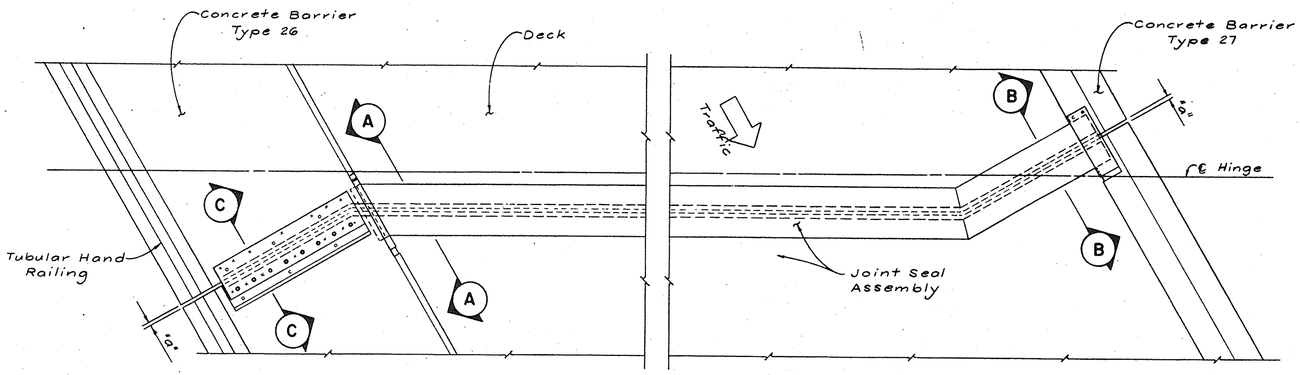

PART PLAN
1/2" = 1'-0"

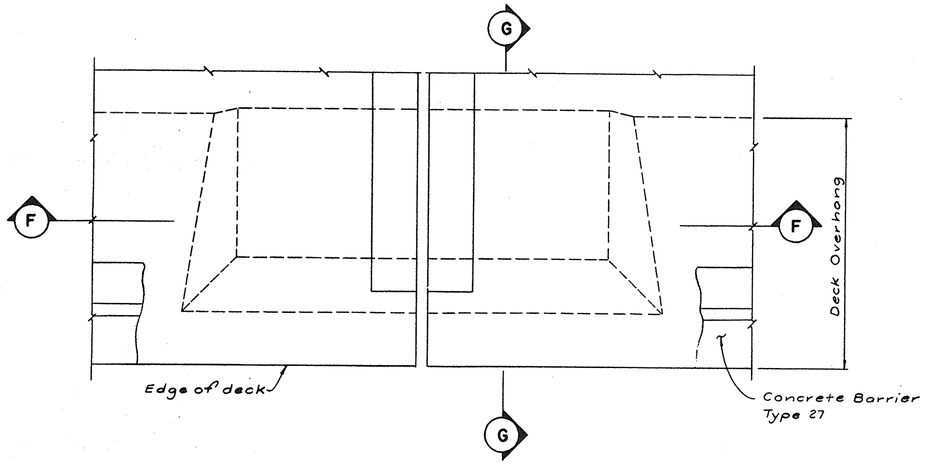

PLAN AT DECK OVERHANG JOINT
1" = 1'-0"

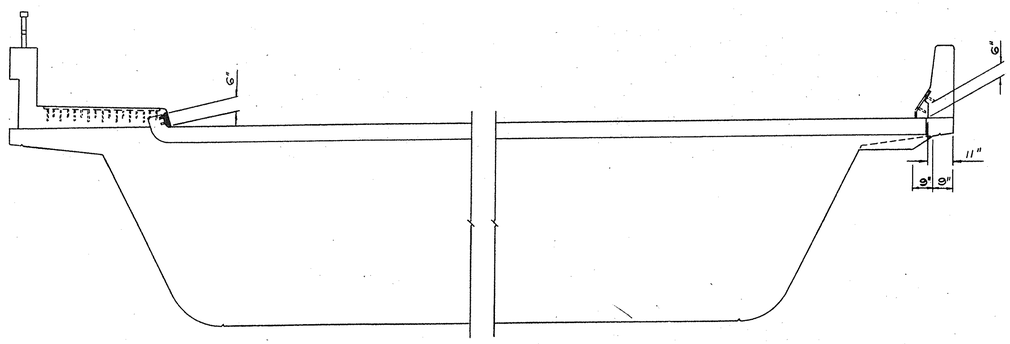

PART TYPICAL SECTION
3/8" = 1'-0"

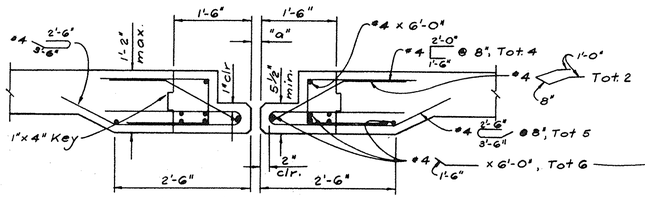

SECTION F-F
3/4" = 1'-0"

Note: Reinf. is in addition to hinge & slab reinf.

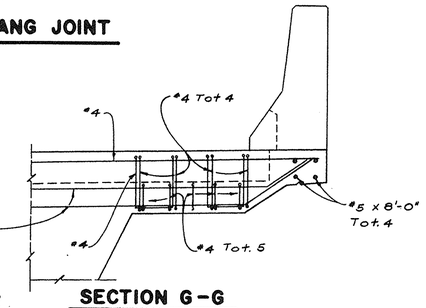

SECTION G-G
3/4" = 1'-0"

Joint Information			"a" Dimensions Structure Temp. (°F)		
Location	Movement (±)	Skew	35-60	60-85	85-110
Hinge	7 1/2"	30°00'00"	2 1/2"	1 3/4"	1"
Abut. 1	3"	22°02'01"	1 1/4"	1"	1/2"
Abut. 8	6"	30°00'00"	2"	1 1/2"	1"

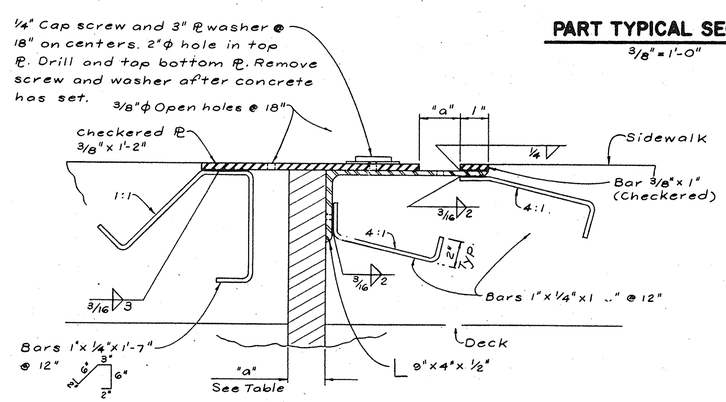

SECTION C-C
No Scale

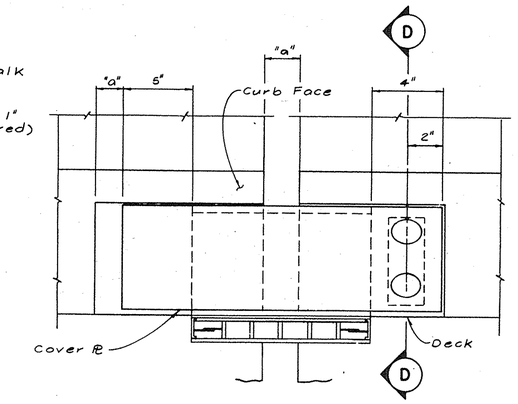

ELEVATION A-A
3" = 1'-0"

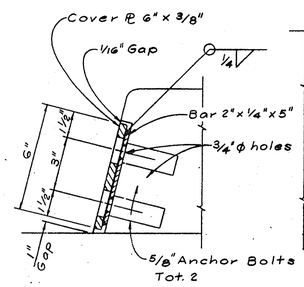

SECTION D-D
3" = 1'-0"

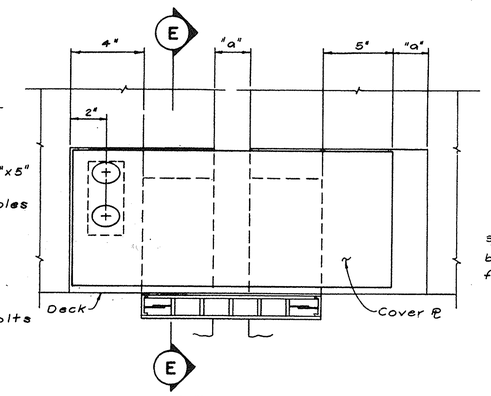

ELEVATION B-B
3" = 1'-0"

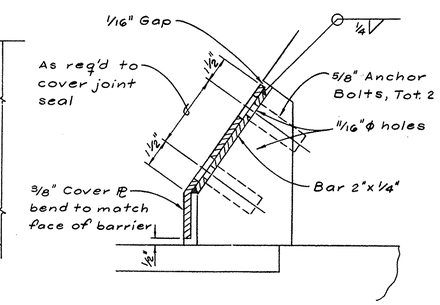

SECTION E-E
3" = 1'-0"

NOTE: Details at hinge shown, details at abutments similar.

REGISTERED PROFESSIONAL ENGINEER W. MARK ASHLEY No. C 34299 Exp. 9-30-91 CIVIL STATE OF CALIFORNIA

AS BUILT 3-93 SLH

McDANIEL ENGINEERING COMPANY, INC.
2650 OLD TOWN AVE, SUITE 201S, SAN DIEGO, CA 92110 (619)296-1020

APPROVED BY	R.C.E.	EXPIRES	DATE
	C34299	9-30-91	6-28-89

DESIGNED BY WMA
DRAWN BY OMC
CHECKED BY CCC
FIELD BOOK

SANTA MARGARITA PARKWAY BRIDGE OVER ARROYO TRABUCO - WIDENING

JOINT SEAL ASSEMBLY DETAILS - I

SHEET 38 OF 57 SHEETS
JOB NO.

DL 19 10200