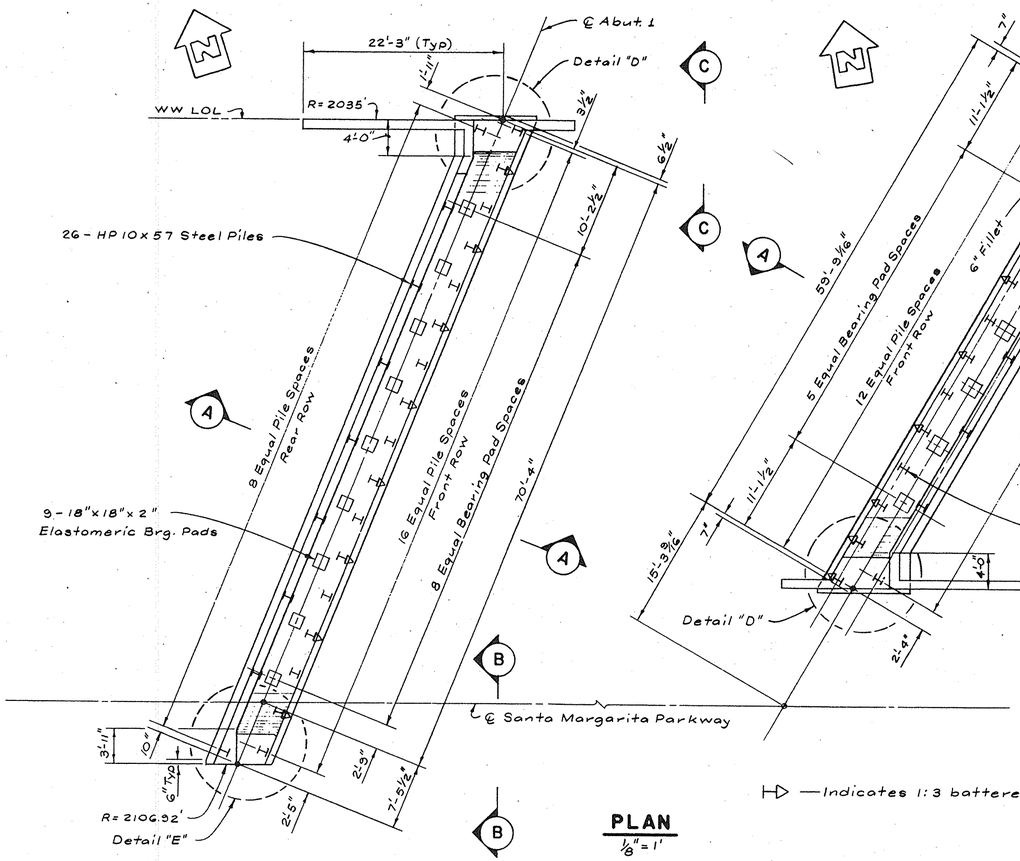

PLAN
1/8" = 1'

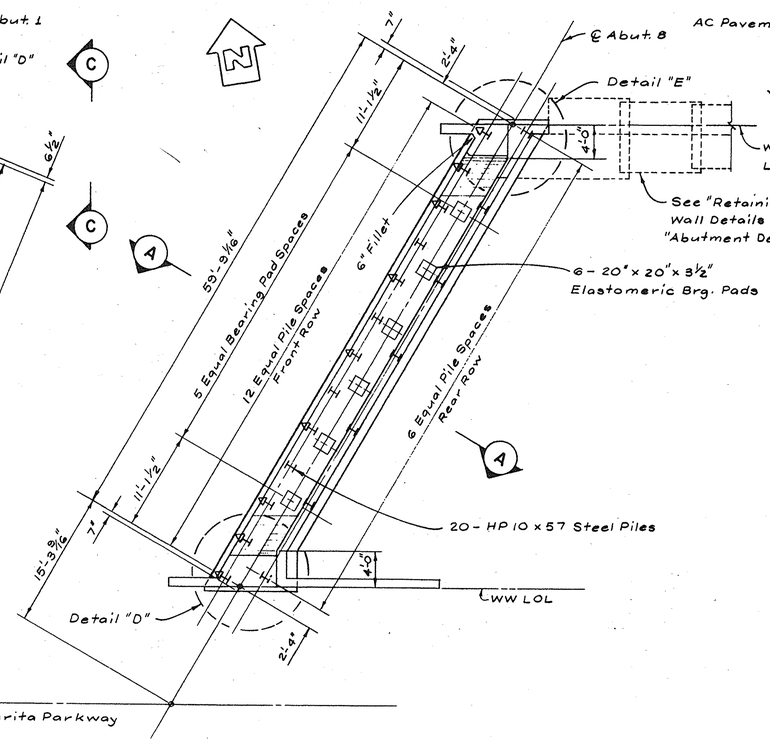

⊢▷ — Indicates 1:3 battered pile

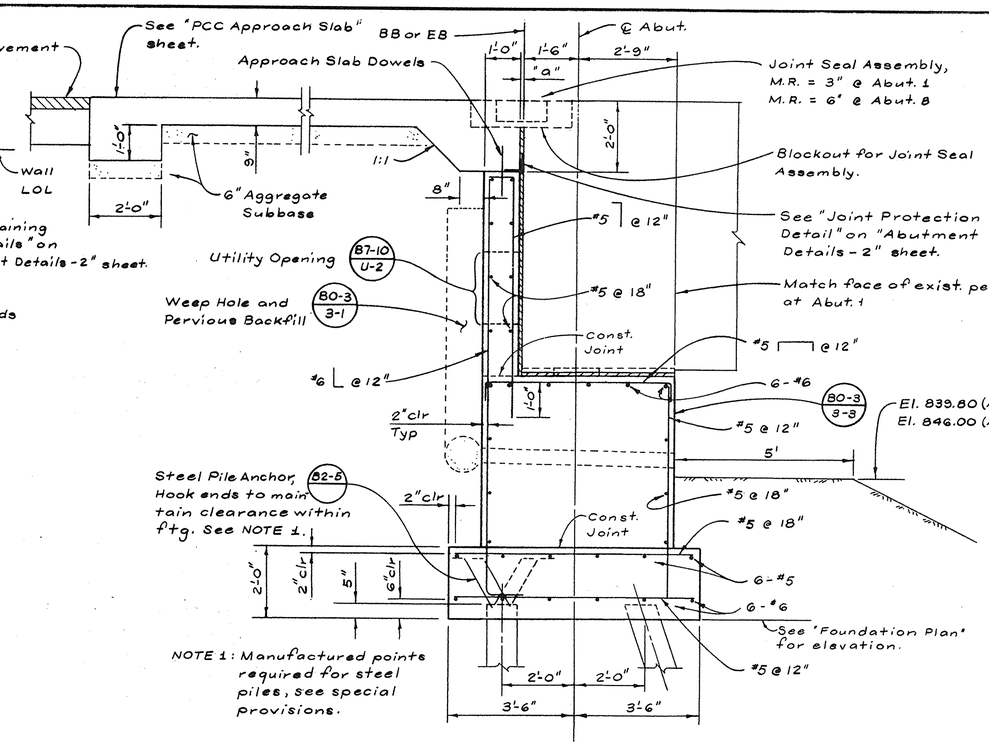

SECTION A-A
1/2" = 1'

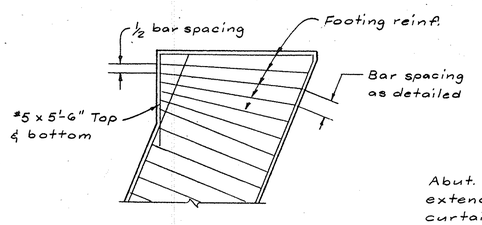

DETAIL "D"
1/4" = 1'

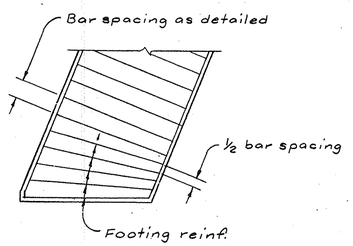

DETAIL "E"
1/4" = 1'

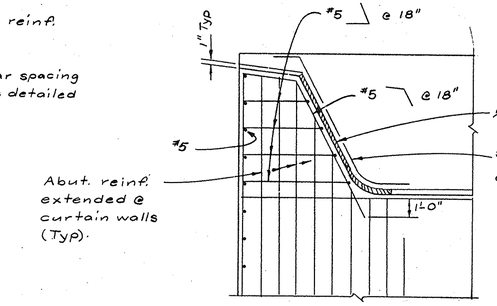

ELEVATION B-B
1/4" = 1'

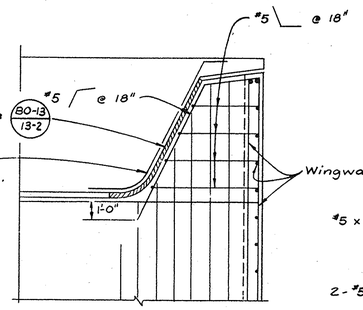

ELEVATION C-C
1/4" = 1'

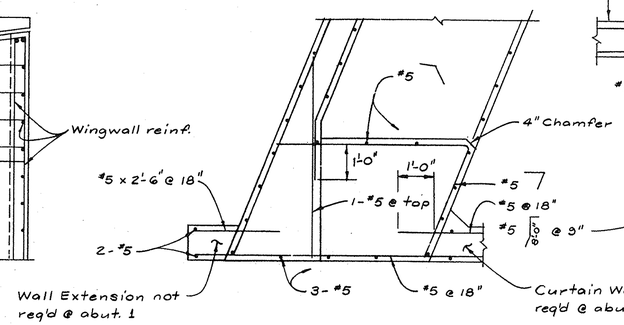

OBTUSE ABUTMENT CORNER
1/2" = 1'

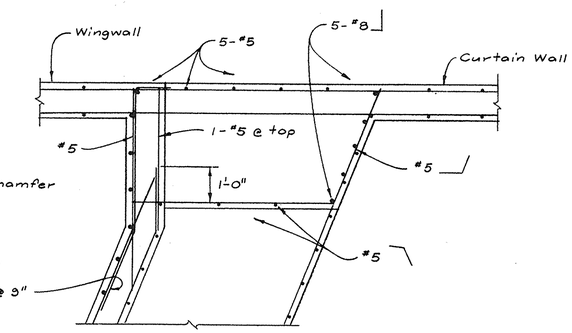

ACUTE ABUTMENT CORNER
1/2" = 1'

REGISTERED PROFESSIONAL ENGINEER W. MARK ASHLEY No. C 34299 Exp. 9-30-91 CIVIL STATE OF CALIFORNIA

AS BUILT 3-93 SLH

McDANIEL ENGINEERING COMPANY, INC. 3990 OLD TOWN AVE., SUITE 207B, SAN DIEGO, CA 92110 (619)692-1920				DESIGNED BY W.M.A. DRAWN BY R.L.A. CHECKED BY C.C.C. FIELD BOOK	SANTA MARGARITA PARKWAY BRIDGE OVER ARROYO TRABUCO - WIDENING
APPROVED BY	R.C.E.	EXPIRES	DATE		ABUTMENT DETAILS - 1
W. Mark Ashley	C 34299	9-30-91	6-28-89		

SHEET 26 OF 57 SHEETS
JOB NO.

DR. 19-15798