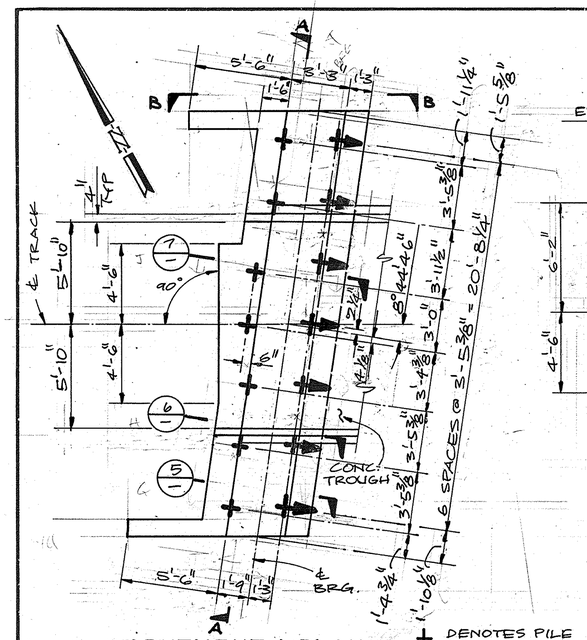

ABUTMENT 1 PLAN

SCALE: 1/4" = 1'-0"

NOTES: 1-ABUT. 2 SIMILAR BUT OPP. HAND
2-PILES SHALL BE CLASS 70 AS PER PLANS B2-5 WITH MODIFICATION. SEE DETAIL THIS SHEET

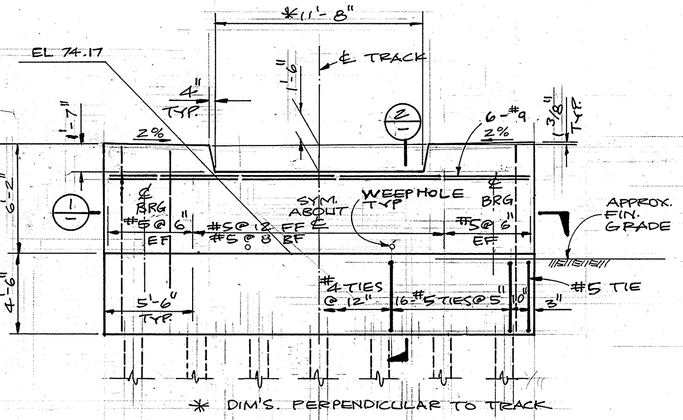

* DIM'S. PERPENDICULAR TO TRACK

ELEVATION A-A

SCALE: 1/4" = 1'-0"

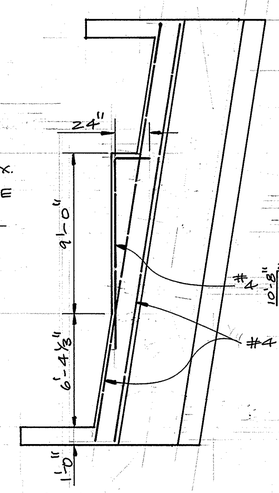

NOTES: 1. VERT. REINF. NOT SHOWN
2. FOR BAR CLEARANCE SEE 5/—

SECTION 1

SCALE: 1/4" = 1'-0"

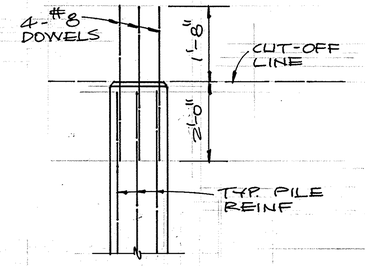

MODIFIED PILE ANCHOR

NO SCALE

NOTE: THIS DETAIL SHOULD BE READ IN CONJUNCTION W/ CALTRANS STD PLAN B2-5

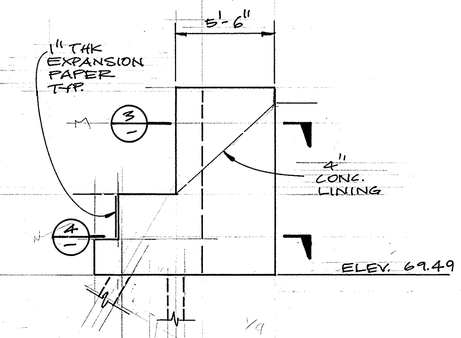

ELEVATION B-B

SCALE: 1/4" = 1'-0"

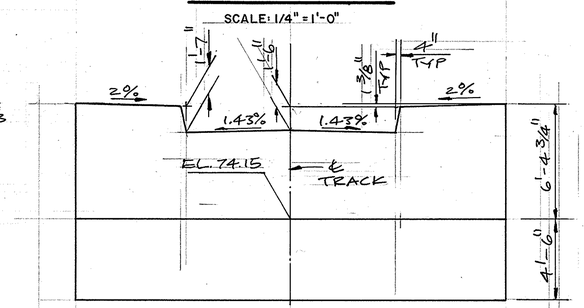

NOTE: FOR REINF SEE ELEV A-A

ABUT. 2 BACK-WALL

SCALE: 1/4" = 1'-0"

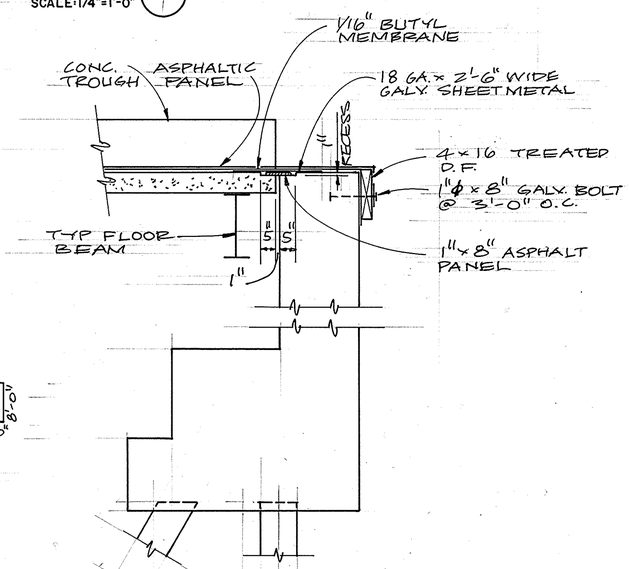

SECTION 2

SCALE: 1/2" = 1'-0"

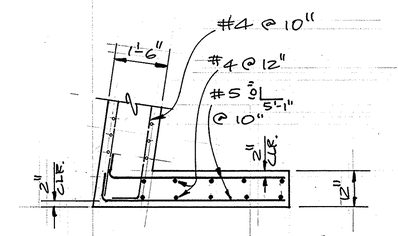

SECTION 3

SCALE: 1/2" = 1'-0"

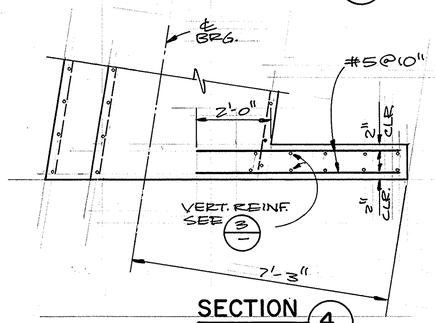

SECTION 4

SCALE: 1/2" = 1'-0"

1 1/2 0 1 2
3 inches on original drawing

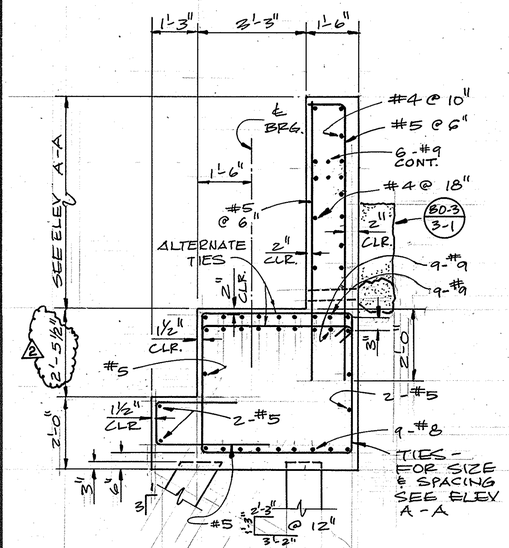

SECTION 5

SCALE: 1/2" = 1'-0"

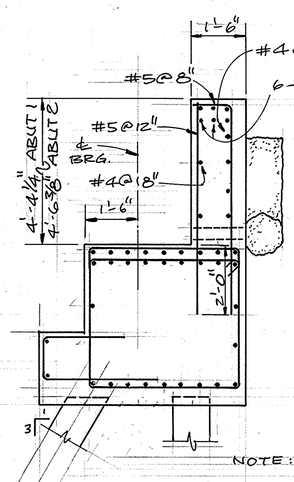

SECTION 6

SCALE: 1/2" = 1'-0"

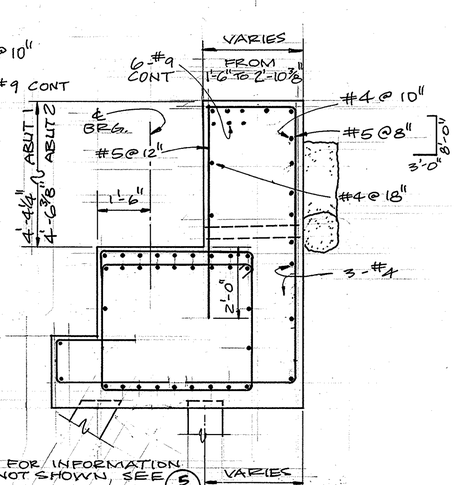

NOTE: FOR INFORMATION NOT SHOWN, SEE 5/—

VARIES FROM 2'-2⅝" TO 2'-10⅜"

SECTION 7

SCALE: 1/2" = 1'-0"

REGISTERED PROFESSIONAL ENGINEER
GARY ANTONELLI
34294
EXP 9/30/87
CIVIL ENGINEER
STATE OF CALIFORNIA

MARK	DATE	DESCRIPTION
2	5/26/87	ABUT. CHANGE

REVISIONS

DESIGNED V.L.
DRAWN N.O. CHECKED G.A.

ORANGE COUNTY
ENVIRONMENTAL MANAGEMENT AGENCY

FULLERTON CREEK (A03)
RAILROAD BRIDGE

ABUTMENT DETAILS

PREPARED UNDER SUPERVISION OF Gary Antonelli 9/25/86 DATE

SCALE: AS SHOWN | DATE | DWG. NO.

SHEET 4 OF 11

JN 51501/51488