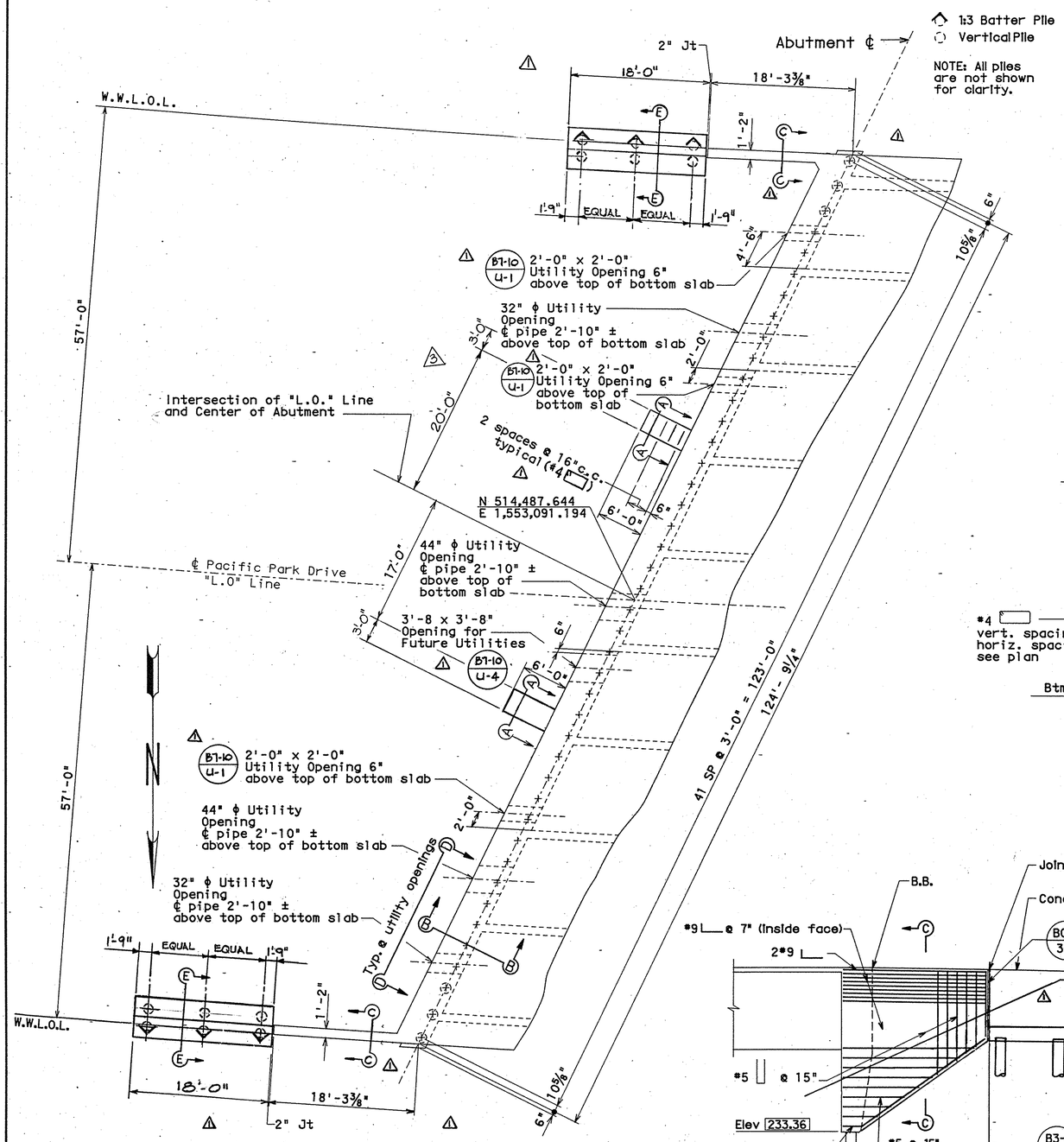

PLAN

⅛"=1'-0"

NOTES:

1. For Sect C-C, D-D, & E-E, See ⚠ ABUTMENT 2 DETAILS sheet.
2. For Utility Locations not noted, see GIRDER LAYOUT AND UTILITY PLAN sheet.

⚠ 1:3 Batter Pile
○ Vertical Pile

NOTE: All piles are not shown for clarity.

AS BUILT PILE DRIVING DATA

PILE DRIVER MAKE AND MODEL _____
DRIVING ACTION _____
RATED ENERGY _____
RAM WEIGHT _____
MAX. STROKE _____
BEARING VALUE FORMULA _____
P=_____ OR P=_____

	CUT-OFF ELEVATION	MAXIMUM TIP ELEVATION	MAXIMUM TIP LENGTH	AVG. "AS-BUILT" PILE TIP ELEV.	AVG. STROKE HEIGHT	AVG. BLOWS PER FOOT	AVG. BEARING VALUE (TONS)
ABUT.1							
ABUT.2							

TABLE AND DATA ABOVE FOR USE OF RESIDENT ENGINEER UPON COMPLETION OF CONSTRUCTION

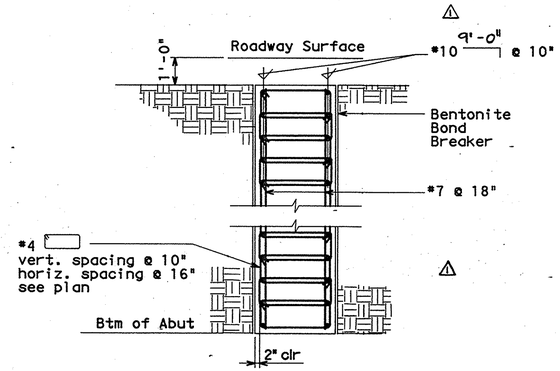

SECTION A-A

⅜"=1'-0"

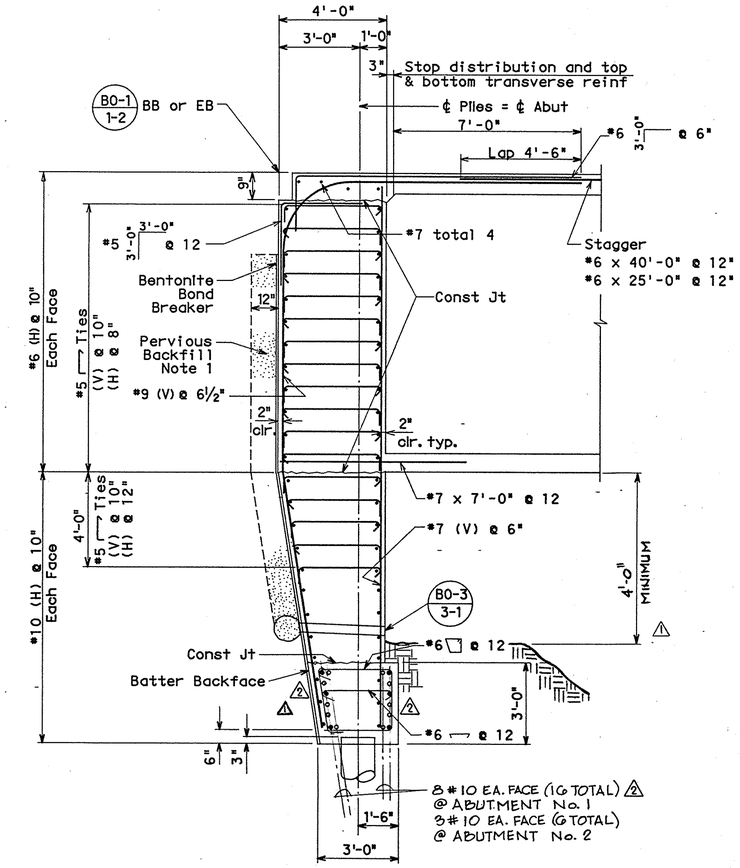

TYPICAL ABUTMENT SECTION B-B

⅜"=1'-0"

Note 1:
Pervious backfill shall be continuous behind abutments, retaining walls, and wing walls.
Irrigate Bentonite Bond Breaker as fill is placed.

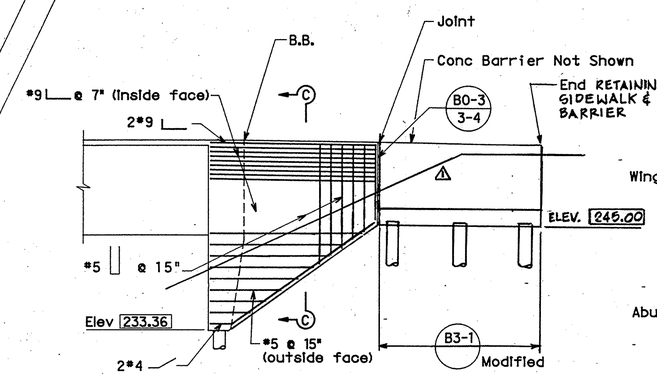

EAST ABUTMENT - SOUTH W.W.

⅛"=1'-0"

Retaining Wall Piles Class 100
Minimum Tip Elev = 172' ⚠
Design Loading = 80 Ton
Piles shall be as shown on PILE DETAILS sheet

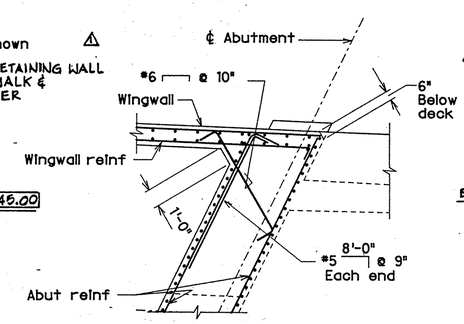

TYPICAL CORNER DETAIL FOR SKEW OVER 20°

¼"=1'-0"

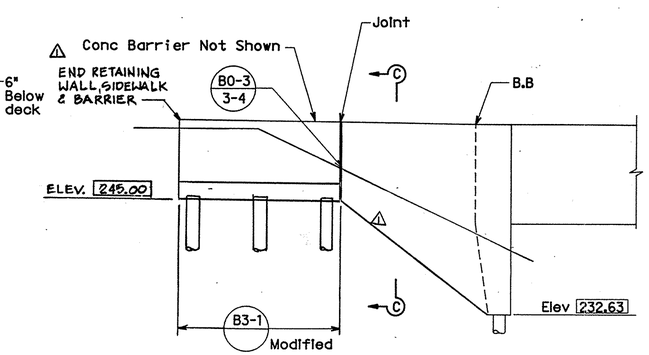

EAST ABUTMENT - NORTH W.W.

⅛"=1'-0"

(619) 283-5424
LIBBY STRUCTURAL ENGINEERS
4452 GLACIER AVENUE
SAN DIEGO, CALIFORNIA 92120
REGISTERED PROFESSIONAL ENGINEER Donald R. Libby No. 2878 STRUCTURAL Exp. 12-31-92 STATE OF CALIFORNIA

MISSION VIEJO COMPANY
26137 LA PAZ ROAD • MISSION VIEJO • CALIFORNIA 92691

DATE	BY	REVISION DESCRIPTION	APP'D	DATE
9/5/93	CV	⚠2 REV. SHEARKEYS LOCATION FOR ABUT. 1		
8/26/93	JS	⚠2 ABUT. #1 PILE CAP REINF. REVISED		
11/92	NM	⚠1 AS NOTED		

DES BC DWN NM CKD MC DATE 3-19-92

PACIFIC PARK DRIVE BRIDGE
OVER
BICYCLE AND EQUESTRIAN TRAILS, AND AWMA EASEMENT
1300 ft. WEST OF ALICIA PARKWAY

ABUTMENT 1 DETAILS

SHEET 4 OF 10

JN 2721

DRS 15719

T:\NOV-1993 14:48 /usr/dgn/2721/2721e04.dg