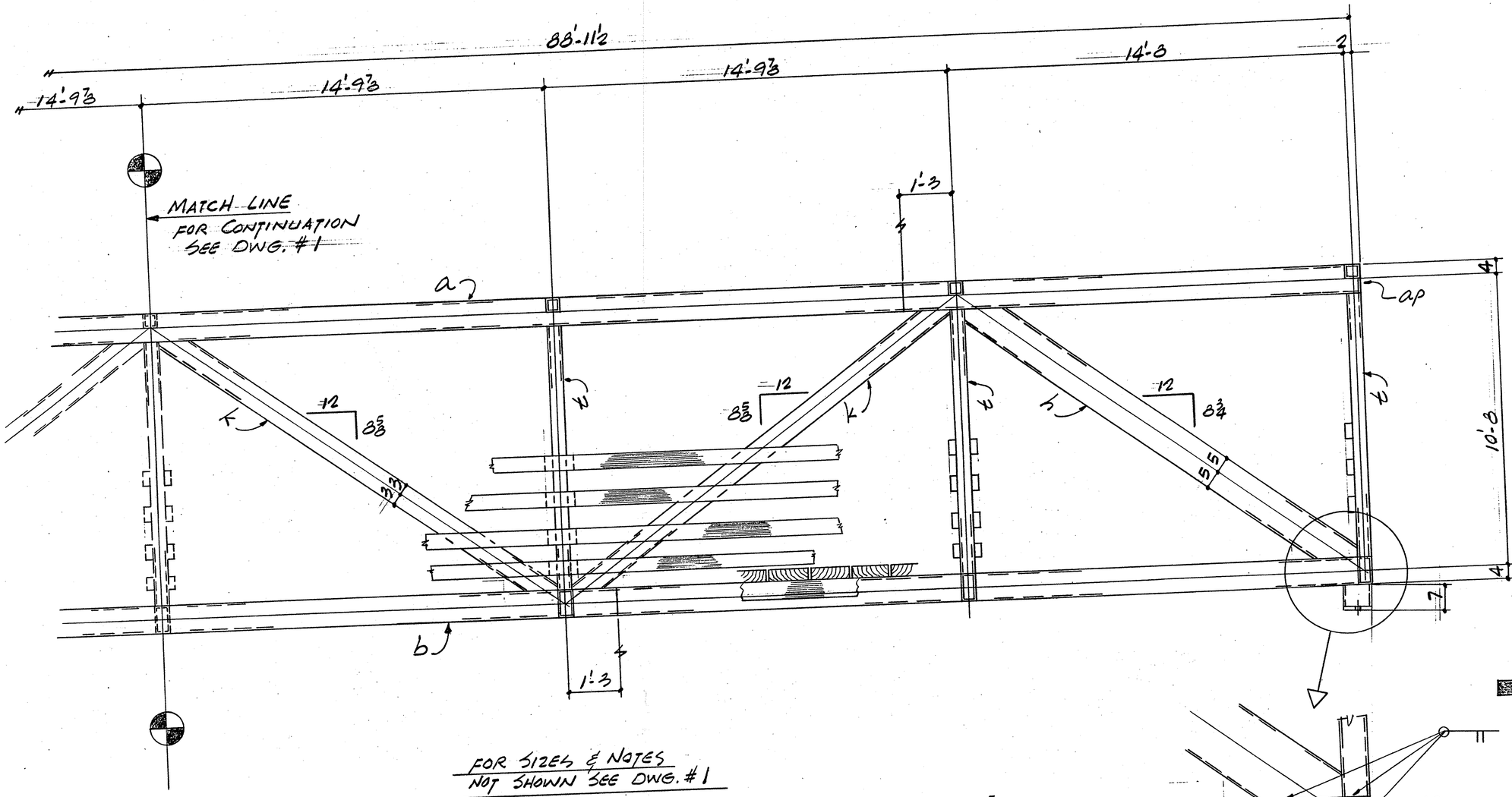

FOR SIZES & NOTES
NOT SHOWN SEE DWG. #1

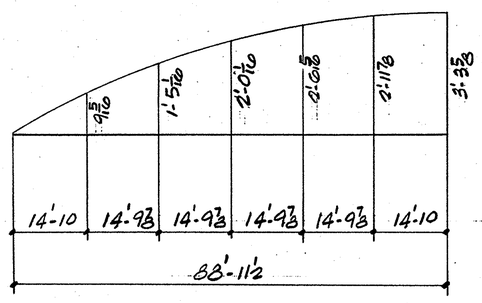

CAMBER DIAGRAM

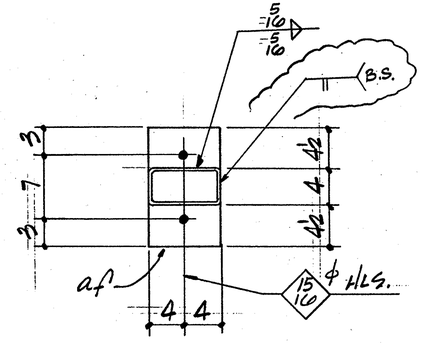

PLAN X

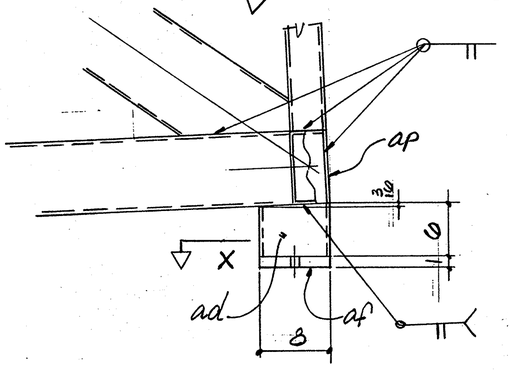

SHIPPING MARKS TO READ RIGHT SIDE UP ON LEFT END OF MEMBER IN POSITION SHOWN.

APPL	9-21-92				
SHOP	10-16-92				
FIELD					
PURCH	9-21-92				

BILL OF MATERIAL

NO OF PIECES	SHIP'G MARK	ASS'Y MARK	SECTION	LENGTH FEET	LENGTH INCHES	REMARKS	WT
ONE	1A		BRIDGE TRUSS				
ONE	1B		do				
4		a	TS 8 x 4 x ¼	88	11	SHOP SPLICE AS SHN. ADD FOR CAMBER	
4		b		88	11	"	
8		c		14	4		
16		d		14	5 3/8		
14		g	z	11	0		
8		h	TS 10 x 4 x ¼	17	5 5/8	FIT. 2.E.	
16		k	TS 6 x 4 x ¼	17	7 1/8	do	
8		m		4	0 13/16	FIT 1.E. BEV. 1.E	
4		p	do	9	8 3/8	BEV. 2.E.	
28		t	TS 4 x 4 x ¼	10	0		
14		v		11	0		
4		w		13	0 13/16	FIT. 2.E.	
8		y		13	2 9/16	"	
16		aa		4	1 3/16	FIT 1.E. BEV. 1.E.	
8		ab	z	9	9 3/16	BEV. 2.E.	
4		ac	TS 8 x 4 x ¼	0	10 3/8	BEV. 1.E.	
4		ad	do	0	6	"	
4		af	PL 1 x 8	1	1		
4		ag	do	1	1		
4		ah	PL ¼ x 15	1	7	TEMP.	
4		ak	PL ¼ x 14	1	2	" BEND	
8		ap	F.B. 4 x ¼	0	8	CLOSURES (TEMP.)	
184		at	F.B. 2 x ¼	0	5½		
16	4A		1½" THK x 8	1	0		
			ELASTOMERIC PADS				
32	4B		¾φ A325 ROD	0	10	FULL THRD'D 1 HEX. NUT EA.	
180			4 x 12 PLANKS	10	11	FLOOR	
			4 x 6 WOOD	712	L/FT	" SUPPT	
24			6 x 6 WOOD	14	10	RAILS (TRIM TO SUIT)	
72			2 x 6 WOOD	14	10	do	do
334			½φ THRD STUDS	0	1½	W/NUT & WASH.	
96				0	2½		
200			do	0	3½	do	

SHOP NOTE:
ALL STEEL IS ASTM A588 OR A242
GRADE 50

REVISIONS

NO.	DATE	DESCRIPTION
△		
△		
△		
△		
△		
1	10-92	ADD BUTT WELD TO PLAN X & SUPPORT

BOLTS ——
HOLES NOTED } UNLESS NOTED
PAINT: NONE

BRIDGE TRUSSES

REF DWGS | REV

DR. BY: JL
DATE: 9/92
CHECKED BY: J
DATE: 9/92
APP'D BY:
DATE:
SCALE:

PMC **PLAS-TAL MFG. CO., INC.**
8815 SO. SORENSEN AVE. SANTA FE SPRINGS, CALIF.
310-945-0013

CUSTOMER: SOUTH UNDERGROUND CONST.
JOB DESCRIPTION: BIKE TRAIL BRIDGE
LOCATION: SANTA ANA RIVER

WORK ORDER NO.: J-4602 | DWG. NO.: 2 | REV.: 1

SAR BIKE TRAIL BR. 428' U/S OF IMPERIAL HWY 5/92
Stat. 7/17

DIETERICH POST REORDER NO. 191855