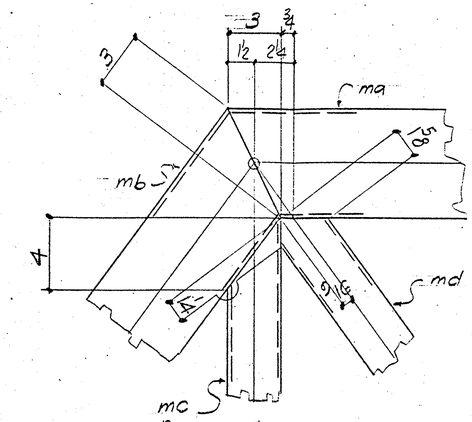

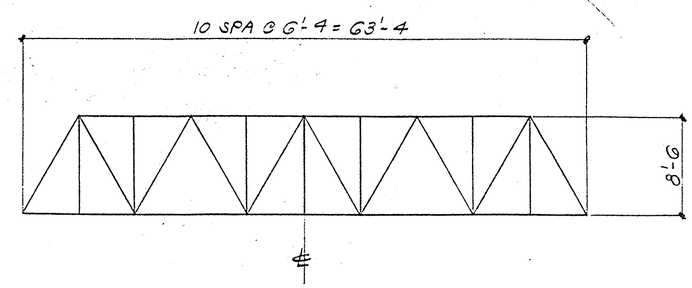

TRUSS ELEVATION

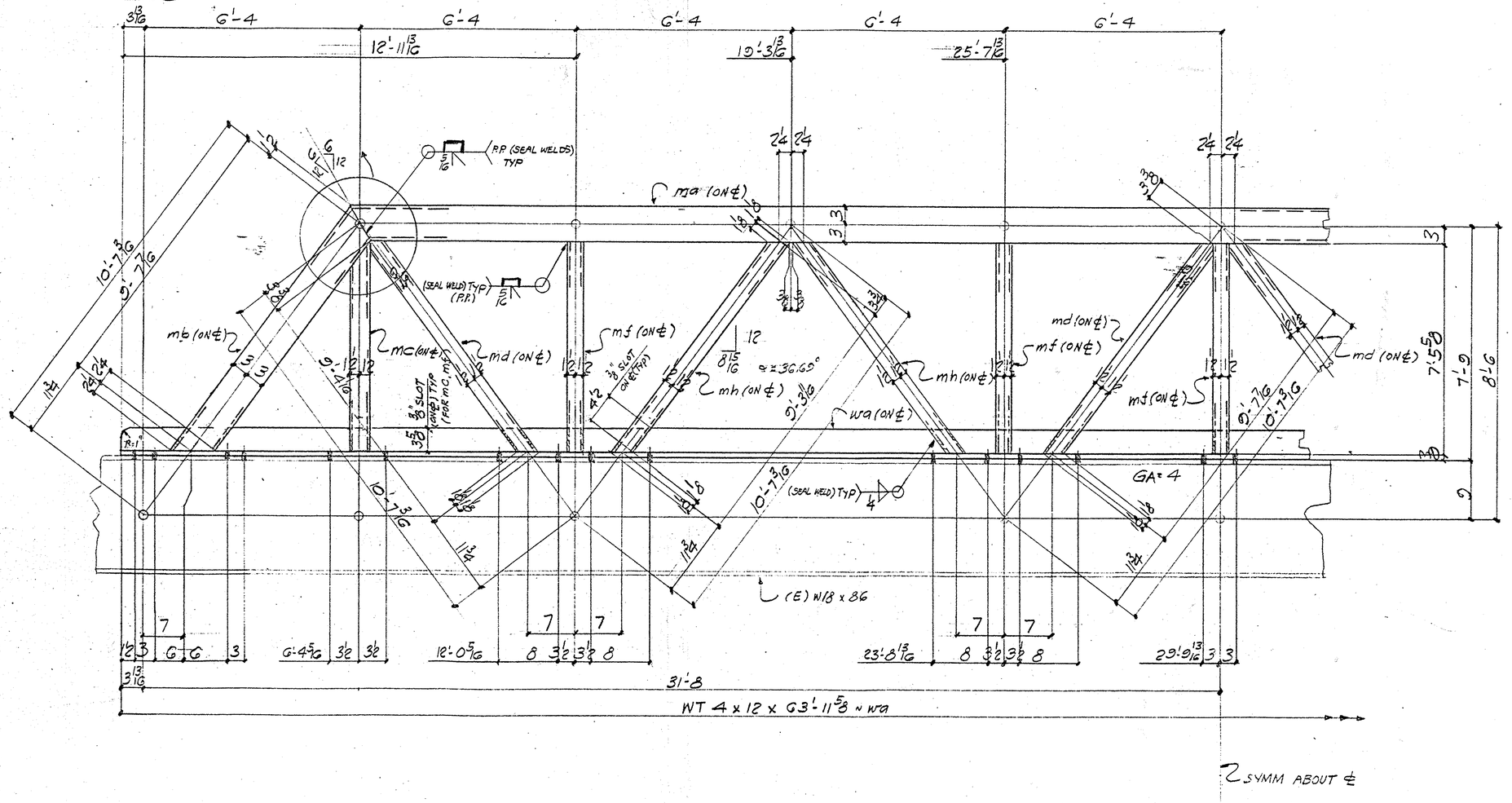

2 - TRUSSES - 1A

104 - 7/8"ϕ HSB x 2 1/4

SHEET
SHOP DRAWINGS
1/3

(REF: E1)

BILL OF MATERIAL

NO OF PIECES	MARK	DESCRIPTION	LENGTH FEET	LENGTH INCHES	REMARKS
2	1A	TRUSSES			
2	ma	TS 6 x 6 x 1/2	50	11	
4	mb	⌀⌀	9	11 3/16	
4	mc	TS 3 x 3 x 5/16	7	5 5/8	
8	md		9	5 3/16	
10	mf		7	5 5/8	
8	mh	⌀⌀	9	5 15/16	
2	wa	WT 4 x 12	63	11 5/8	
		FIELD BOLTS:			
102		7/8"ϕ HSB	0	2 1/4	A325
		MATL'S: A36 U/N			
		TUBES: A500 GR B			

NOTE:
DEBURR & NO PAINT
ALL HLS

BLUE PRINT RECORD

NO.	DATE	FOR	CK

BOLTS
OPEN HOLES 15/16"ϕ
EDGE DIST
UNLESS NOTED
PAINT PAINTED PER SPECS

TRUSSES

REVISIONS

NO.	DATE	DESCRIPTION
1	12/1	ADDED NOTE 'A'
2	11/2	ATT'D SECT
3	2/7	WELDS

COORG CONTRACTORS ENGINEERS
Phone: (310) 598-9121
FAX: (310) 598-5011
P.O. Box 870, Los Alamitos, CA 90720

PROJECT BRIDGE RETROFIT
GREENVILLE / BANNING CHANNEL
COSTA MESA, CALIF

ARCH'T
ENG
DWN BY MCR
CHK BY OCK
DATE 11-21-95
DATE —
CONTRACTOR: COORG CORP
SHEET NO. 1/3
JOB NO. 9510