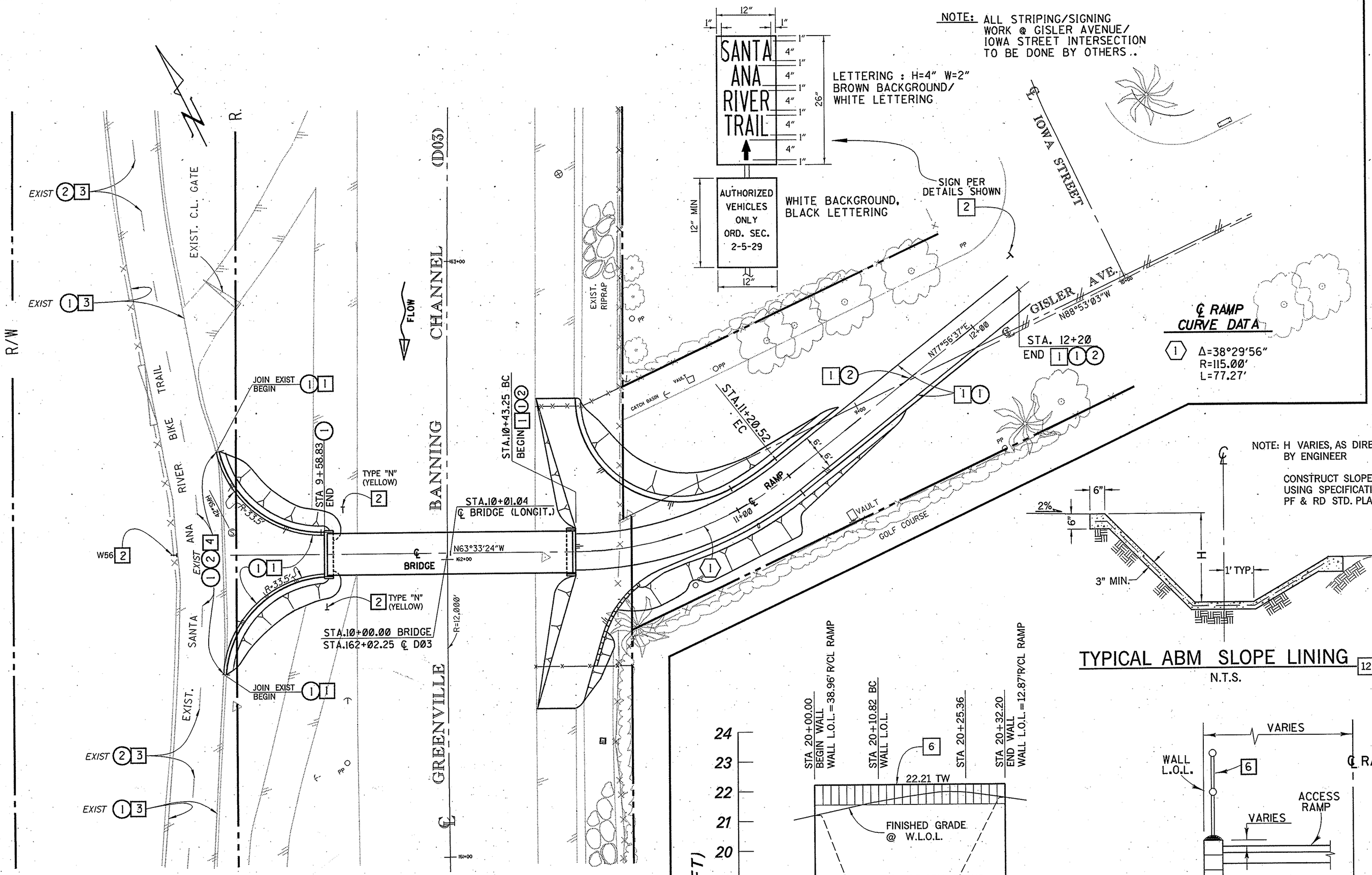

APPROACH RAMP SIGNING & STRIPING DETAILS

SCALE : 1"=20'-0"

STRIPING NOTES
(THIS DETAIL ONLY)

- [1] PAINT
- [2] INSTALL
- [3] PROTECT IN PLACE
- [4] REMOVE
- (1) 4" SOLID WHITE
- (2) 4" DASHED YELLOW

NOTE :

PROTECT IN PLACE ALL EXISTING IMPROVEMENT AND NEW CONSTRUCTION ELSEWHERE PER THESE PLANS . UNDERGROUND UTILITIES NOT SHOWN .

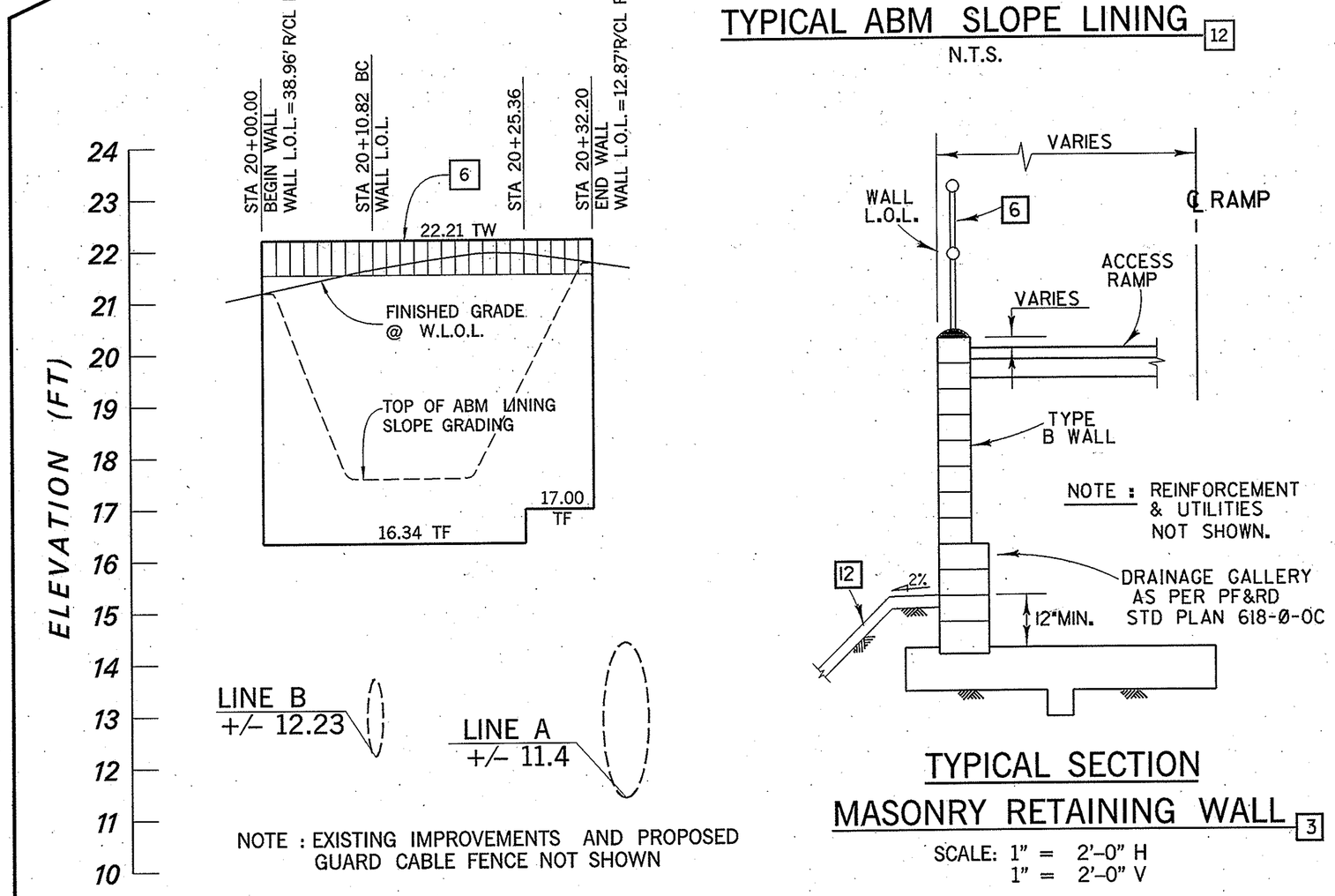

NOTE : EXISTING IMPROVEMENTS AND PROPOSED GUARD CABLE FENCE NOT SHOWN

ELEVATION–MASONRY RETAINING WALL [3]

SCALE: 1" = 10'-0" H
1" = 2'-0" V

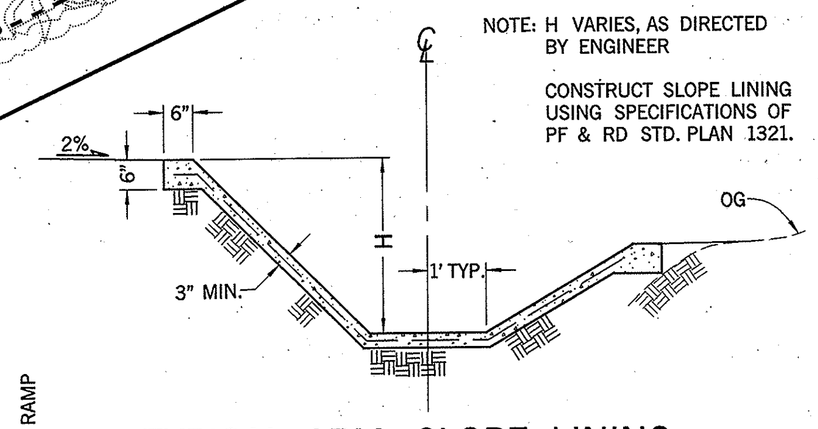

TYPICAL ABM SLOPE LINING [12]

N.T.S.

TYPICAL SECTION MASONRY RETAINING WALL [3]

SCALE: 1" = 2'-0" H
1" = 2'-0" V

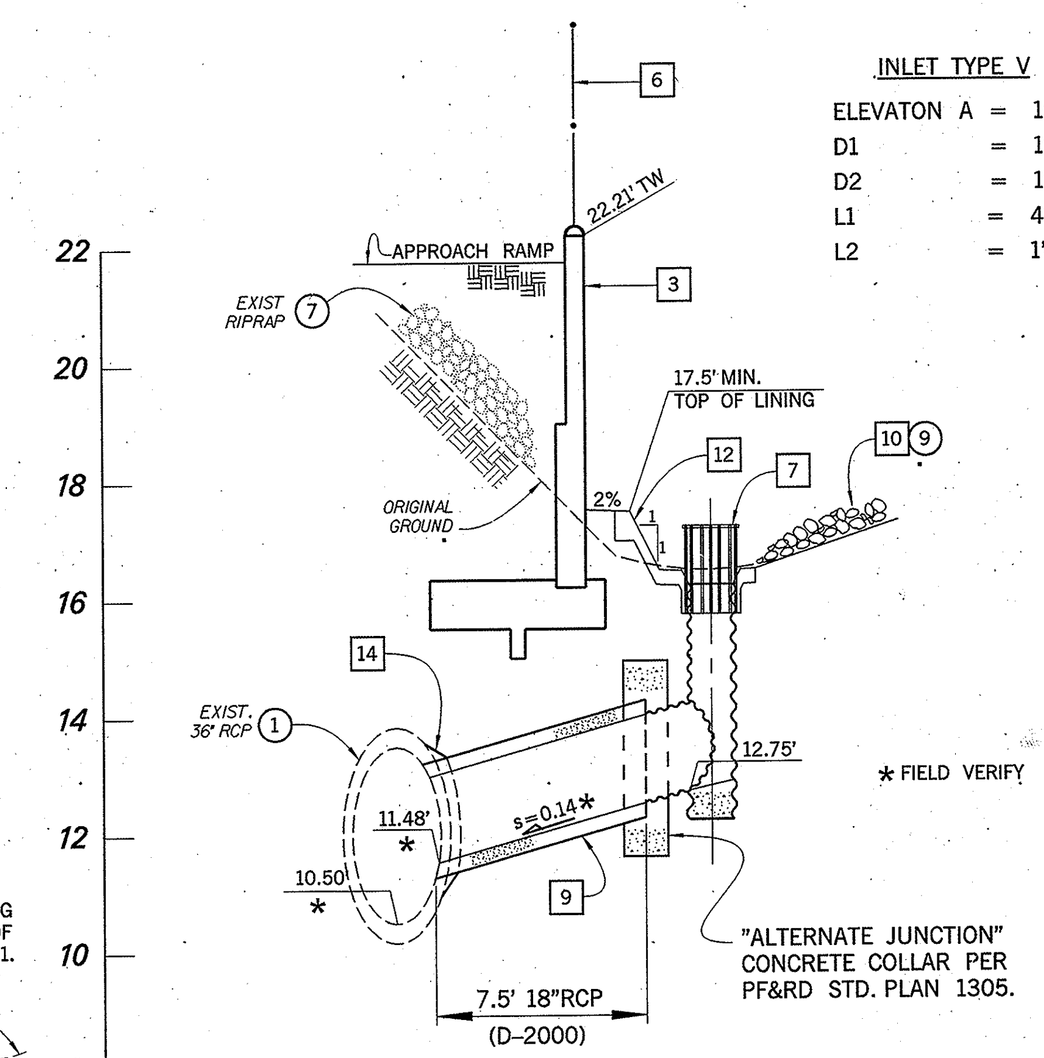

PROFILE LINE "B"

SCALE: 1" = 4'-0" H
1" = 2'-0" V

CONSTRUCTION NOTES:

- [3] CONSTRUCT MASONRY BLOCK RETAINING WALL PER PF&RD STANDARD PLAN 618-0-OC, PLAN, PROFILE & DETAILS SHEETS 5 & 6 AND AS DIRECTED BY ENGINEER.
- [6] INSTALL GUARD CABLE FENCE PER PF&RD STANDARD PLAN 1413 AND PLAN.
- [7] CONSTRUCT INLET TYPE V PER PF&RD STANDARD PLAN 1305, PLAN AND DETAILS .
- [8] CONSTRUCT REINFORCED CONCRETE COLLAR PER PF&RD STANDARD PLAN 1317, PLAN AND DETAILS.
- [9] INSTALL RCP PER PLAN AND DETAILS SHEET 5.
- [12] CONSTRUCT ABM SLOPE LINING PER PLAN AND DETAILS.
- [14] CONSTRUCT JUNCTION STRUCTURE TYPE VI PER PF&RD STANDARD PLAN 1315, DETAILS, AND AS DIRECTED BY THE ENGINEER.

LEGEND

- (1) PROTECT IN PLACE
- (2) REMOVE
- (7) REMOVE INTERFERING PORTIONS .

1 ½ 0 1 2
3 inches on original drawing

MARK	DATE	DESCRIPTION

REVISIONS

PREPARED UNDER SUPERVISION OF

REGISTERED CIVIL ENGINEER THEODORE C. RIGONI No. C 48526 Exp. 6-30-00 STATE OF CALIFORNIA

TED RIGONI #48526 (EXP. 6/30/00) 5/1/97 DATE

ORANGE COUNTY
PUBLIC FACILITIES & RESOURCES DEPARTMENT

BRIDGE OVER GREENVILLE-BANNING CHANNEL @ WESTERLY END OF GISLER AVENUE

MISCELLANEOUS DETAILS

DESIGNED TR		SHEET
DRAWN HP/ML	CHECKED EK	6 OF 7
SCALE AS SHOWN	DATE	DRAWING NO.

File name : /gisler/gisstrip.dgn