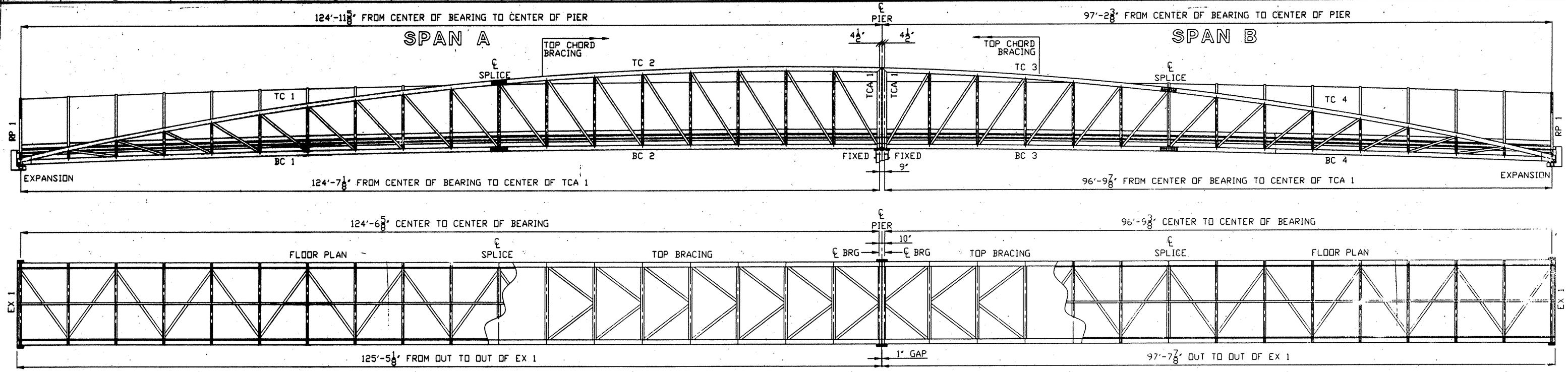

ELEVATION AND FLOOR PLAN FOR "SPAN A" AND "SPAN B"

SCALE 1/8" = 1'

(B)

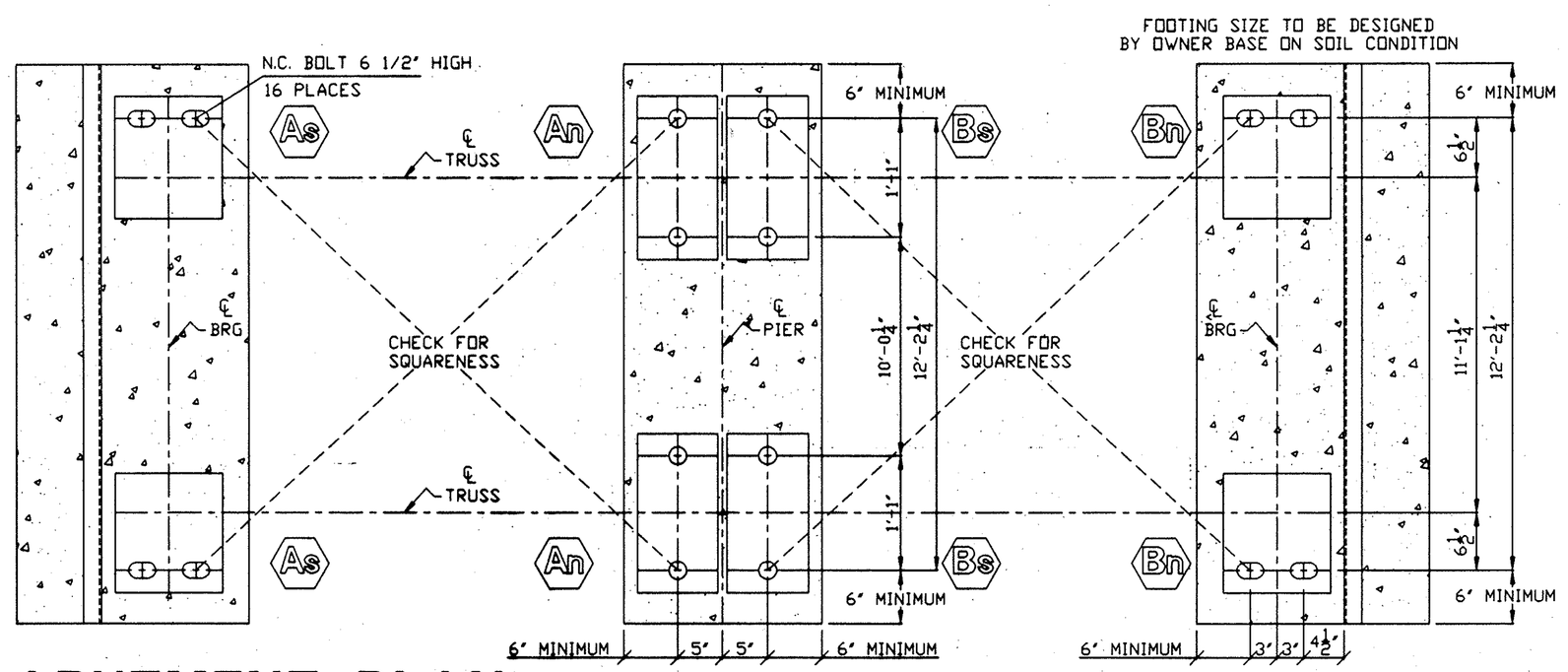

ABUTMENT PLAN

SCALE 1' = 1'

(C)

ABUTMENT REACTIONS	As	An	Bs	Bn
VERTICAL DEAD LOAD	27.0 K	28.2 K	21.8 K	20.8 K
VERTICAL LIVE LOAD	26.7 K	26.7 K	20.6 K	20.6 K
HORIZ. (WIND)	± 8.8 K	± 11.1 K	± 7.7 K	± 6.6 K
UPLIFT (WIND)	± 11.2 K	± 14.1 K	± 10.7 K	± 8.6 K
VERTICAL (SEISMIC)	± 17.1 K	± 17.9 K	± 13.8 K	± 13.2 K
HORZI. (SEISMIC)	± 53.0K	± 55.6K	± 40.3K	± 38.7K

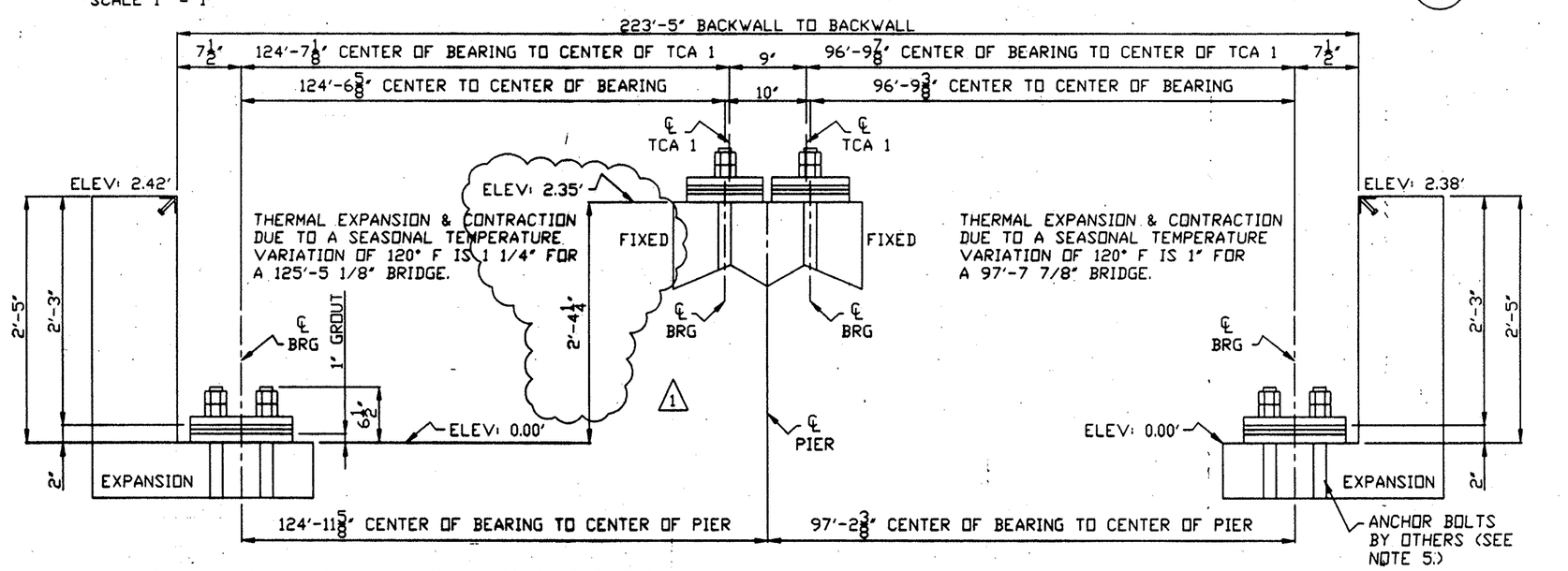

ABUTMENT SECTION

SCALE 1' = 1'

(D)

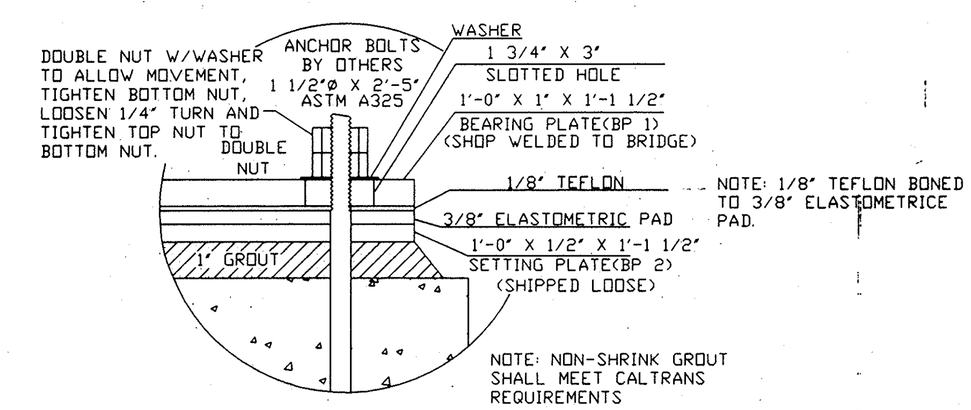

BEARING DETAIL @ ABUTMENT (TYP)

N.T.S.

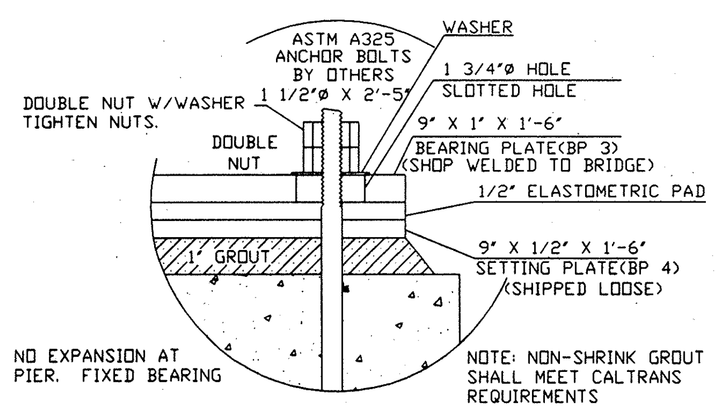

BEARING DETAIL @ PIER (TYP)

N.T.S.

GENERAL NOTES

1. All design stresses are in accordance with the specification of THE AMERICAN INSTITUTE OF STEEL CONSTRUCTION.
2. Welding to conform with the AMERICAN WELDING SOCIETY D1.1 latest revision. Welding to be performed by experienced welders qualified in accordance with A.W.S. procedures. Welding electrodes to be ASTM E-80XX series. Weld process to be FCAW.
3. All steel to have a minimum yield 50,000 psi.
4. Structural welds will be a minimum of 3/16" fillet unless shown otherwise. Minimum weld does not apply to Seal Welds.
5. Anchor bolts to be ASTM A325.
Nuts on anchor bolts should be loosely 'hand tightened' so as to allow the bearing plates to slide on the setting plates or TELFON pads, if called for. Place setting plate & TELFON pads on shims, set bridge, and then grout under setting plates. (IF REQUIRED) Field connections bolts shall be ASTM A325 TYPE 3 and shall be tighten by the turn of the nut method to obtain proper torque.)
6. All steel to be sand blasted to S.S.P.C. #6 'Commercial Sand Blast Finish' immediately prior to painting. Paint specifications listed **below.**
7. Concrete to be 4000 psi lightweight (120 PCF or less), poured and finished on the job site. Concrete shall meet the requirements of Caltrans Class 'D'. The bridge shall be delivered, formed with 1 1/2" deep 22 gage, galvanized composite floor deck. No construction or **control** joints. Contractor to furnish reinforcement.
8. Hand rails and all other accessible surfaces to be ground smooth with no sharp edges or corners.
9. Length of anchor bolts and foundation details are for general arrangement purposes only. Actual foundation and substructure design, railing, camber, and slope requirements, electrical grounding, and clearances (flood plain, roadway, and waterway) are the responsibility of others.

PAINT SPECIFICATIONS

Primer: DEVRAN 4170 - Epoxy primer: 3.0 - 8.0 Mils Dry
Top Coat: DEVTHANE 389 - Aliphatic Urethane Gloss Enamel: 2 - 3 Mils Dry
COLOR TO BE: _____

THIS BRIDGE IS DESIGNED BASED ON THE FOLLOWING CRITERIA.
(1) Dead load of 85 psf plus an evenly distributed live load of **85 psf.**
(2) Dead load + concentrated load of 10,000 pounds + impact.
(3) Wind load (approx. 120 mph.) calculated on the entire vertical **surface** as though fully enclosed.
(4) SEISMIC: CALTRANS - BRIDGE DESIGN SPECIFICATIONS
SOIL PROFILE = S_d
ACCELERATION = 0.3g
MAGNITUDE = 7.0
REF: R3-8 OF ATC-32

ALABAMA REGISTERED NO. 19851 PROFESSIONAL ENGINEER DAVID O. BURCH
6/22/00

ASSOCIATED CONSULTANT & PROFESSIONAL ENGINEER
DAVID O. BURCH P.E.
CONSULTING STRUCTURAL & CIVIL ENGINEER
112 SHADYWOOD PL.
MABANK, TEXAS
6/27/00

Rev	S	DESCRIPTION	BY/DATE	CHK'D BY
0		REVISED ELEVATION, RFF.	DDY 6/22/00	DAG
B		REVISED PER CUSTOMER COMMENTS	DDY 5/26/00	
A		RELEASED FOR APPROVAL		

STEADFAST BRIDGES®
A DIVISION OF BILTOLAST PRODUCTS INC.
119 40th St. NE
FORT PAYNE, AL 35967-8139
1-800-749-7515
ACTIVE MEMBER

PLACARD ATTACHED ON RIGHT END POST AT EACH END OF BRIDGE
STEADFAST BRIDGES
PEDESTRIAN TRAFFIC
LIGHT VEHICLE
MAXIMUM LOAD
5 TONS
BILTOLAST PRODUCTS INC
FORT PAYNE, ALABAMA
DATE OF MANUFACTURE
SERIAL #

JOB: 10'-5 1/4" X 223'-4" "KEYSTONE" BRIDGE
FOR: ORANGE COUNTY, CALIFORNIA
ADDRESS: RANCHO MISSION VIEJO, LLC
PO BOX 9
SAN JUAN CAPISTRANO, CA 92693
ARCHITECT: LAND CONCERN, LTD.
CONTRACTOR:
DESCRIPTION: LADERA RANCH PROJECT NO. 10-0367-12

DRAWN BY: 12/21/99 DDY
APP'D BY: RGG
CHECKED BY: DAG

THIS BRIDGE STRUCTURE SHALL NOT BE FIELD MODIFIED IN ANY WAY WITHOUT PRIOR APPROVAL FROM STEADFAST BRIDGES. THESE DRAWINGS AND DESIGNS ARE THE PROPERTY OF BILTOLAST PRODUCTS INC. AND ARE NOT TO BE COPIED OR USED IN ANY WAY DETRIMENTAL WITHOUT THEIR WRITTEN CONSENT.

DRAWING #: 991043-1 OF 5
REV. 0