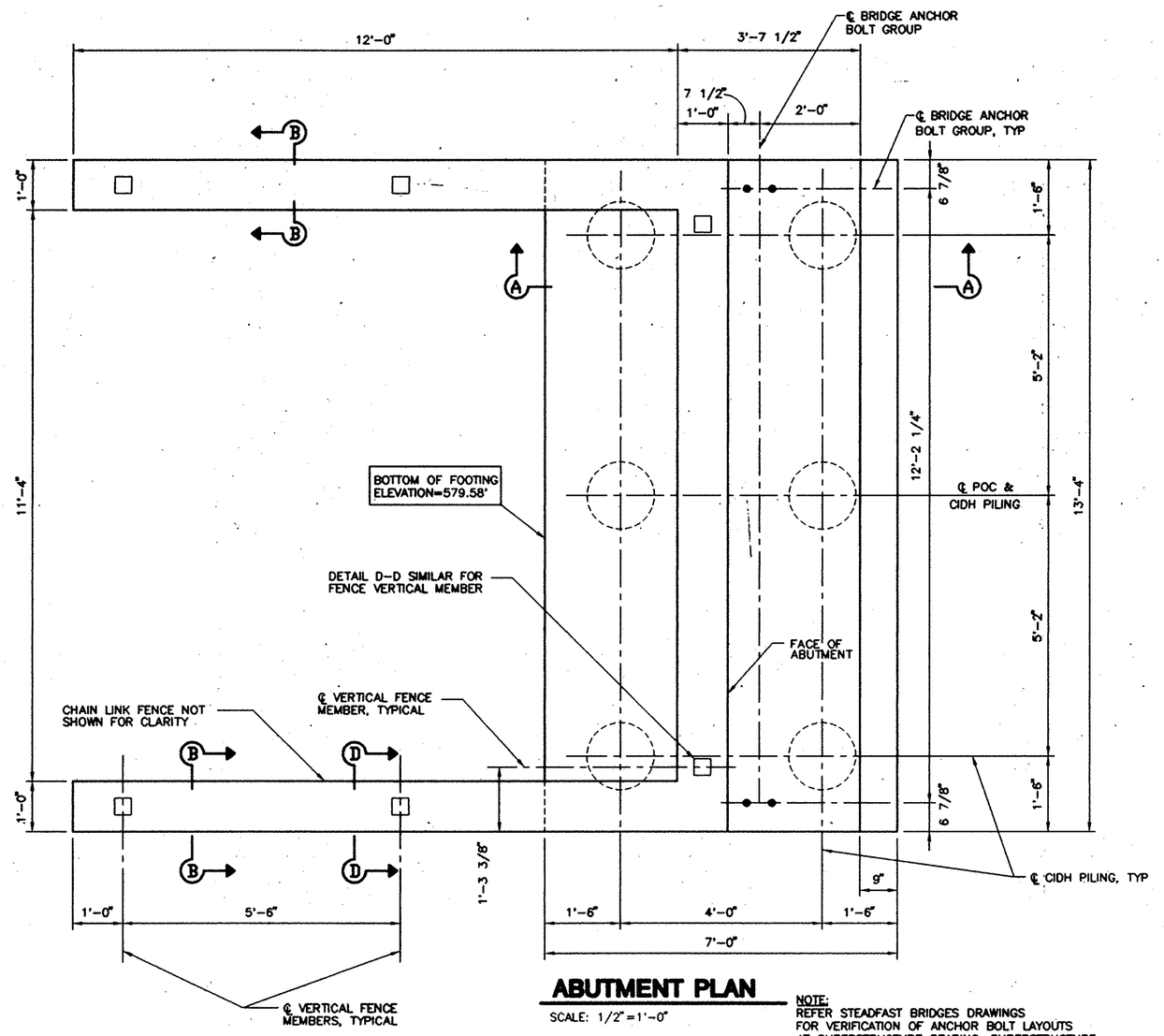

ABUTMENT PLAN

SCALE: 1/2"=1'-0"

NOTE:
REFER STEADFAST BRIDGES DRAWINGS FOR VERIFICATION OF ANCHOR BOLT LAYOUTS AT SUPERSTRUCTURE BEARING. SUPERSTRUCTURE NOT SHOWN (BY OTHERS).

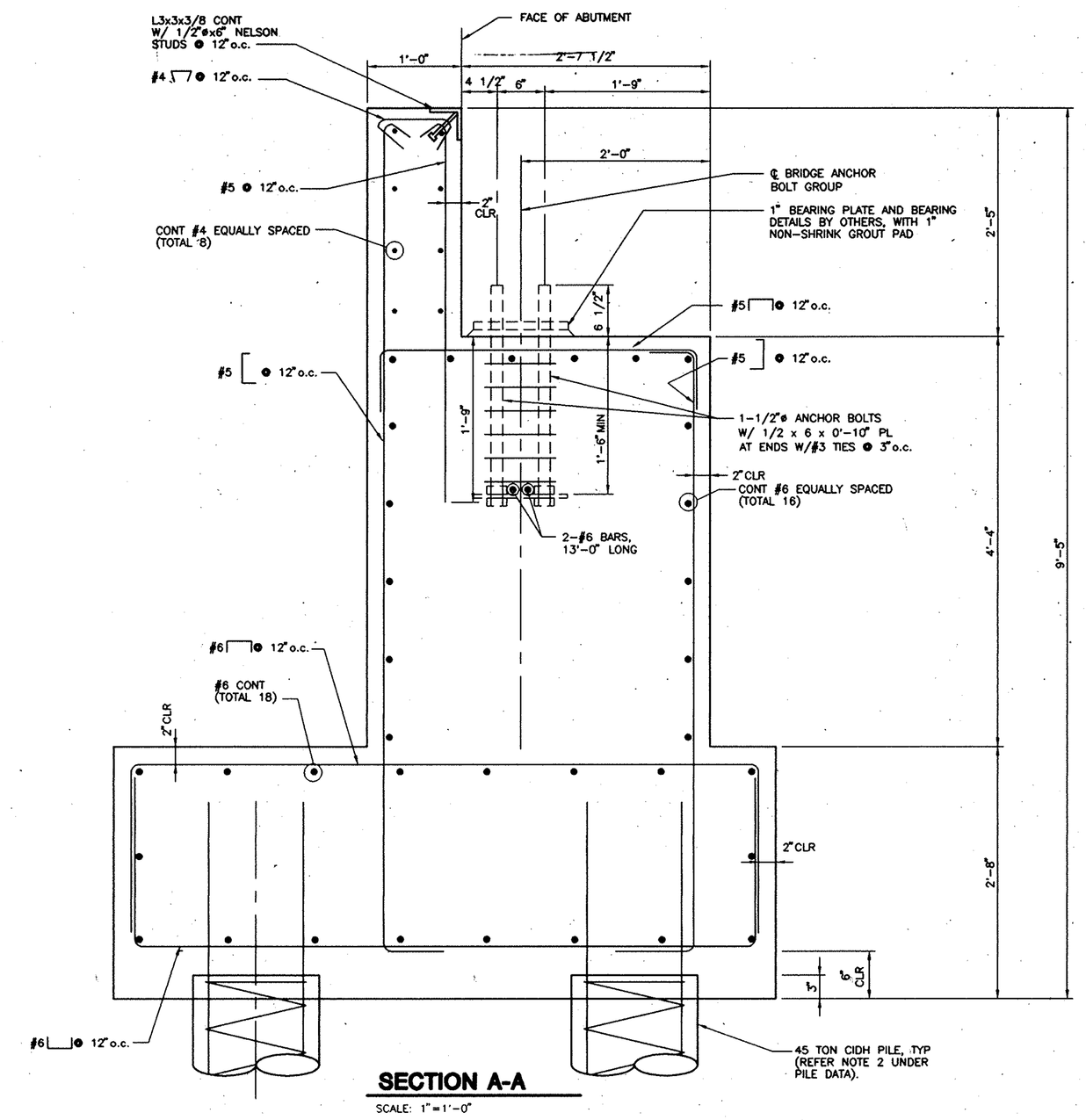

SECTION A-A

SCALE: 1"=1'-0"

GENERAL NOTES
LOAD FACTOR DESIGN

DESIGN: CALTRANS BRIDGE DESIGN SPECIFICATIONS (1983 AASHTO WITH INTERIMS AND REVISIONS BY CALTRANS)
AASHTO "GUIDE SPECIFICATIONS FOR THE DESIGN OF PEDESTRIAN BRIDGES"

LIVE LOADING: PEDESTRIAN (85psf)

SEISMIC LOADING: REFER ATC-32 FIGURE R3-8 W/FOLLOWING SPECIFICATIONS:
PEAK ROCK ACCELERATION 0.3g
SOIL PROFILE TYPE D MAGNITUDE: 7.25±0.25

REINFORCING STEEL: Fy = 60 KSI
REINFORCED CONCRETE: F'c = 3500 PSI

SUPERSTRUCTURE DEFLECTION: MAXIMUM ALLOWABLE LIVE LOAD DEFLECTION FOR SUPERSTRUCTURE IS 1/500 OF SPAN LENGTH

STRUCTURAL STEEL

1. STEEL SHALL CONFORM TO THE FOLLOWING GRADES:
   ALL WF, CHANNELS, ANGLES, PLATES, ETC. (UNO) — A36
   HSS TUBULAR MEMBERS — A500 GR.B
   ANCHOR BOLTS — A325
2. ALL STRUCTURAL STEEL SHALL BE DETAILED, FABRICATED AND ERECTED IN ACCORDANCE WITH THE AISC CODE OF STANDARD PRACTICE (1992), EXCEPT AS MODIFIED IN THESE NOTES AND THE PROJECT SPECIFICATIONS.
3. ALL BOLTED CONNECTIONS SHALL BE ACCORDING TO AISC SPECIFICATIONS FOR STRUCTURAL JOINTS. ALL WELDED CONNECTIONS SHALL BE IN ACCORDANCE WITH THE STRUCTURAL WELDING CODE (1996) BY THE AMERICAN WELDING SOCIETY. WELDER CERTIFICATION SHALL BE MADE AVAILABLE AT THE JOB SITE. WELD INSPECTIONS SHALL BE IN ACCORDANCE WITH CALTRANS SPECIFICATIONS.
4. SECURE STEEL PLATES TO ANCHORS.
5. GROUT SHALL BE ACCORDING TO CALTRANS STANDARD SPECIFICATIONS DATED JULY 1995.
6. PAINT FENCE POSTS AND CHANNEL ASSOCIATED WITH CHAIN LINK FENCE ACCORDING TO STEADFAST SPECIFICATIONS.

PILE DATA – CIDH CONCRETE PILES

LOCATION	DIAMETER	DESIGN LOADING (SERVICE)	NOMINAL RESISTANCE		APPROX. CUT-OFF ELEVATION	DESIGN TIP ELEVATION	SPECIFIED TIP ELEVATION
			COMPRESSION	TENSION			
ABUTMENT 1	16"	45 tons	180 kips	90 kips	580	547(1)	547
BENT 2	16"	45 tons	180 kips	90 kips	568	535(1)	535
ABUTMENT 3	16"	45 tons	180 kips	90 kips	580	547(1)	547

(1) DESIGN TIP ELEVATION IS CONTROLLED BY COMPRESSION.
(2) REFER CALTRANS STANDARD PLAN B2-3 "16" CAST-IN-DRILLED-HOLE CONCRETE PILE" DATED JULY 1992.

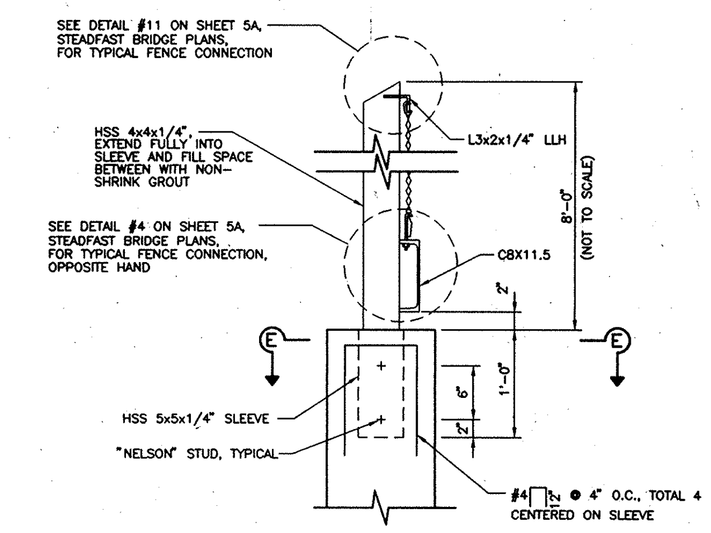

SECTION D-D

SCALE: 1"=1'-0"

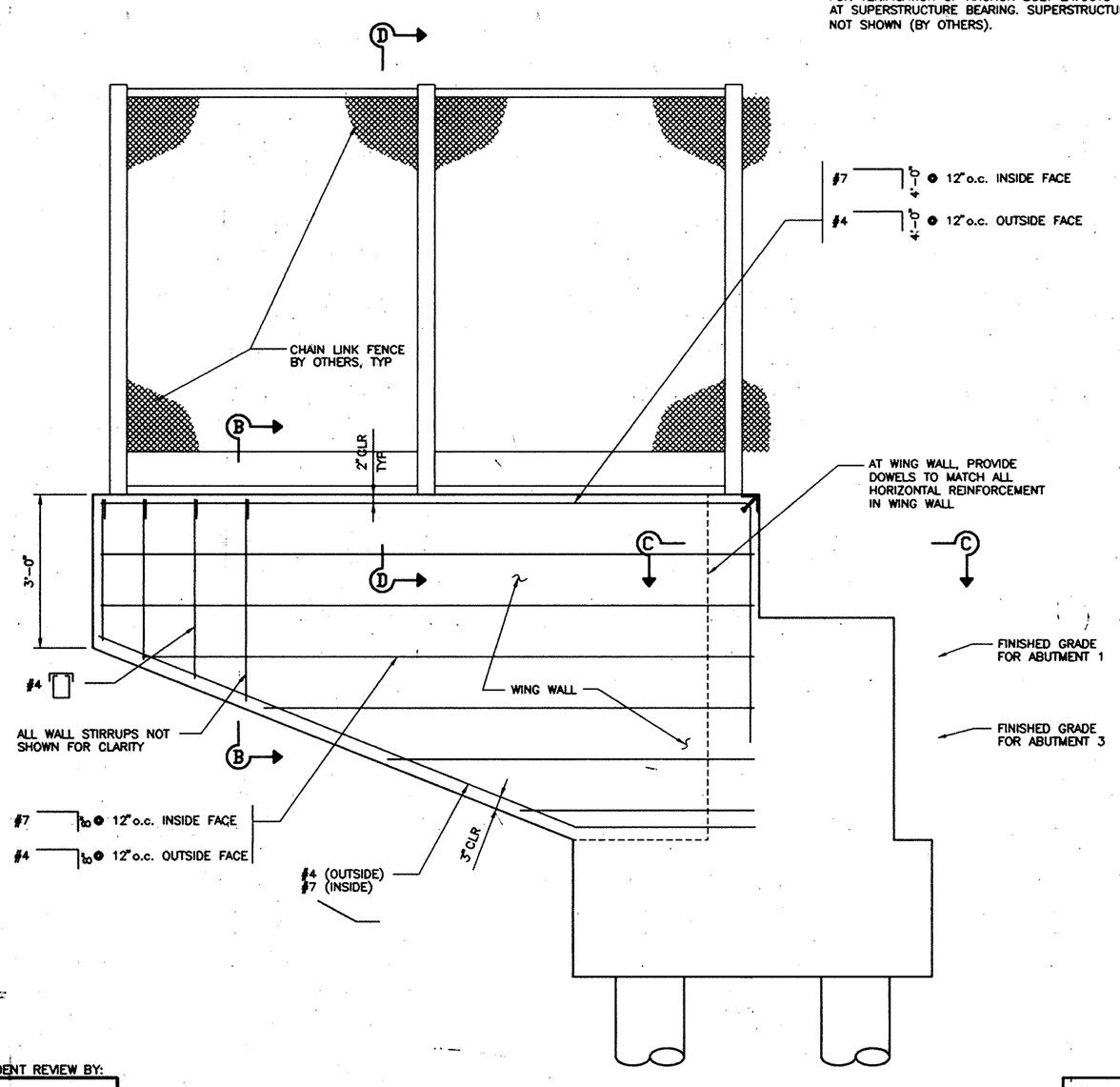

WINGWALL ELEVATION

SCALE: 1/2"=1'-0"

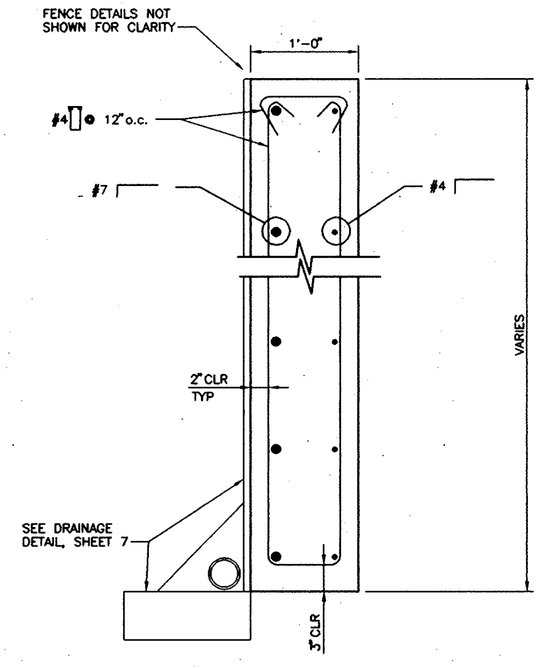

SECTION B-B

SCALE: 1"=1'-0"

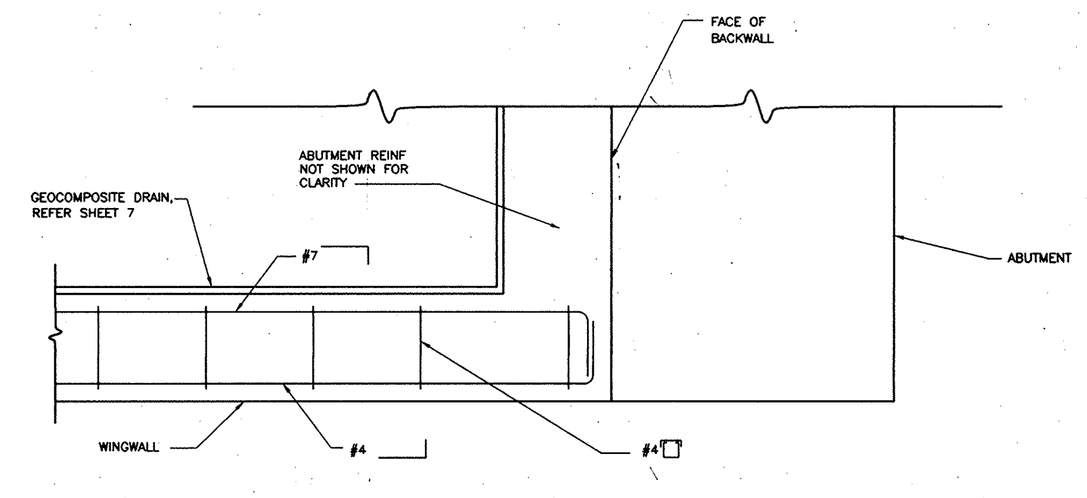

PLAN SECTION C-C

SCALE: 1"=1'-0"

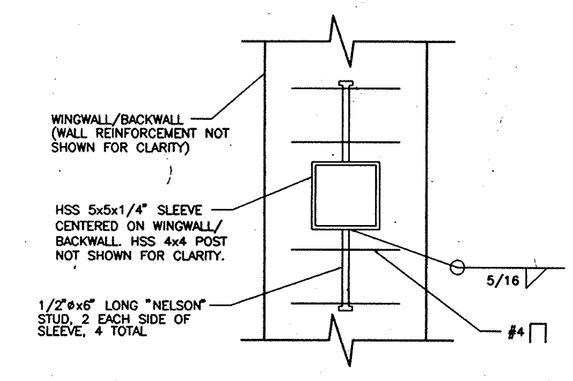

PLAN SECTION E-E

SCALE: 1 1/2"=1'-0"

INDEPENDENT REVIEW BY:

NO.	DATE	REVISIONS	APPROVED

REGISTERED PROFESSIONAL ENGINEER — ROBERT JAMES McDERMOTT, C 054378, CIVIL — STATE OF CALIFORNIA

HUITT-ZOLLARS
Huitt-Zollars, Inc.
15101 Red Hill Avenue, Tustin, CA 92780 (714) 259-7900

PREPARED UNDER THE SUPERVISION OF
ROBERT J. McDERMOTT — 054378 R.C.E. — 12/31/00 EXPIRES — 6/27/00 DATE

DESIGNED BY: AWM
DRAWN BY: LL
CHECKED BY: CMG

STRUCTURAL PLANS FOR
LADERA RANCH
CROWN VALLEY PEDESTRIAN BRIDGE

SHEET 5 OF 7 SHEETS
JOB NO. 10-0367-12

JUL 19 2000