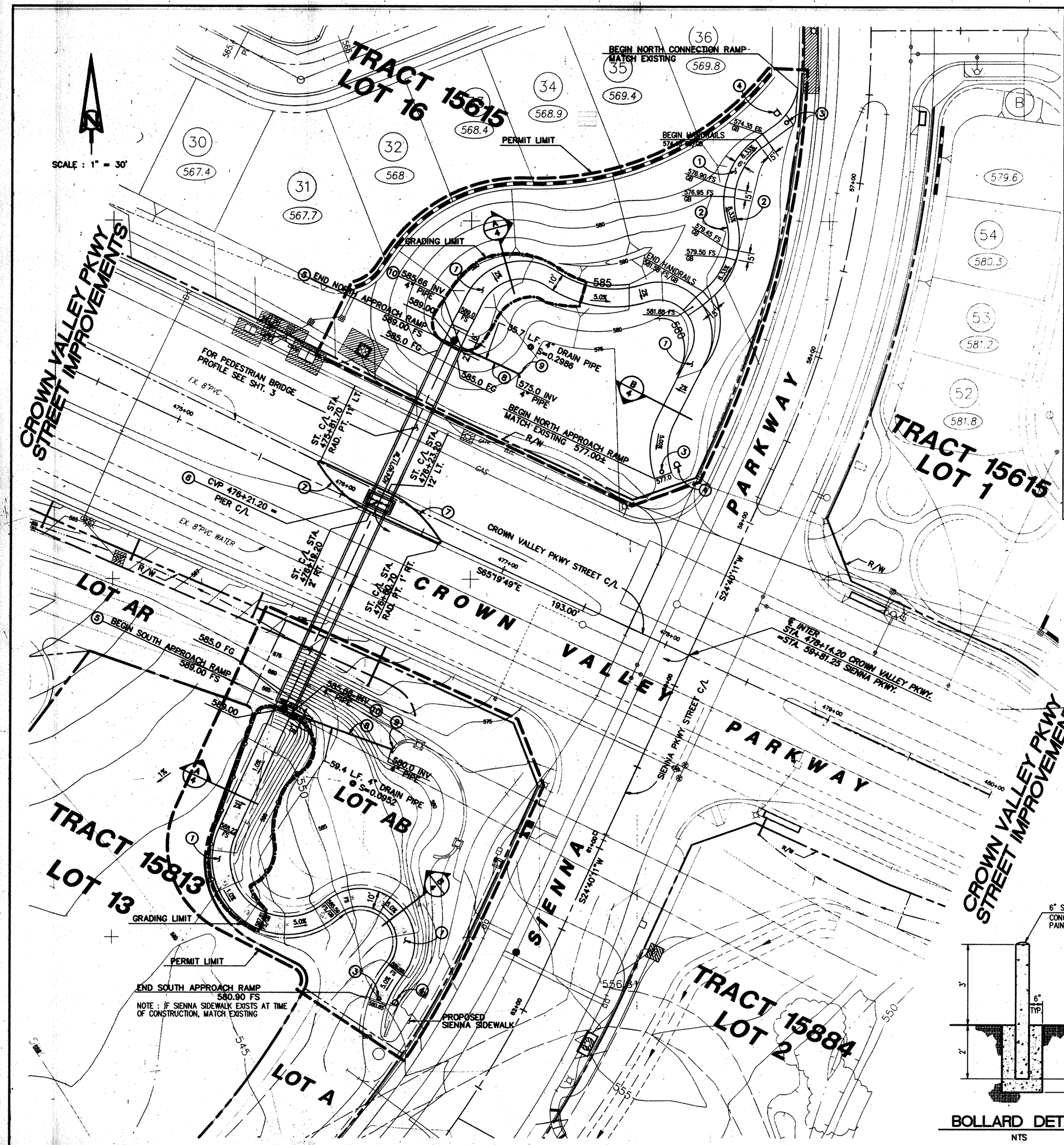

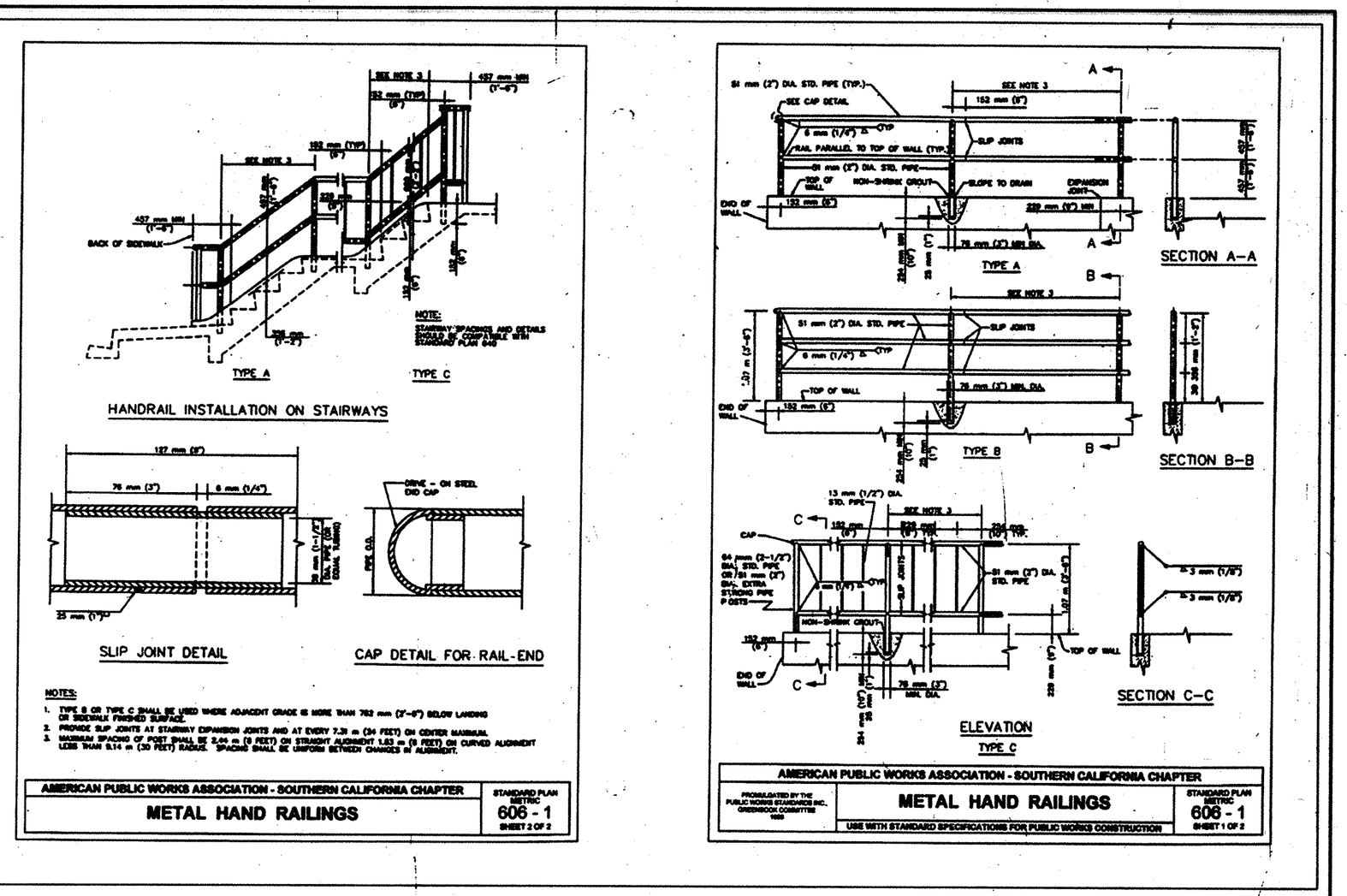

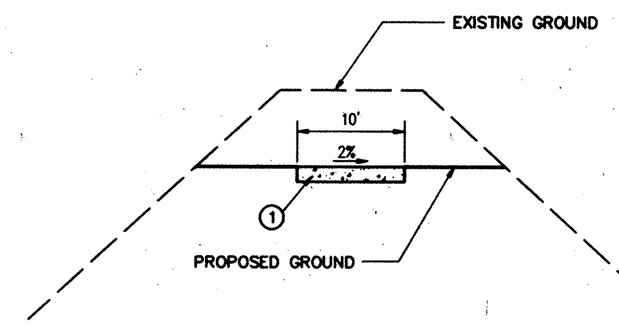

SECTION "A - A"

NTS

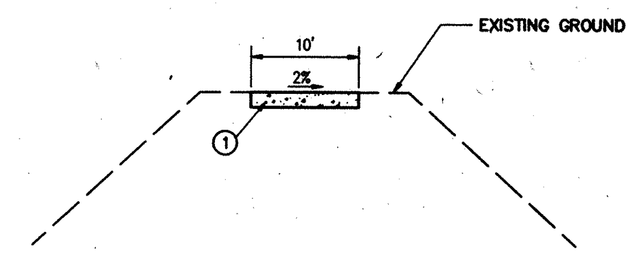

SECTION "B - B"

NTS

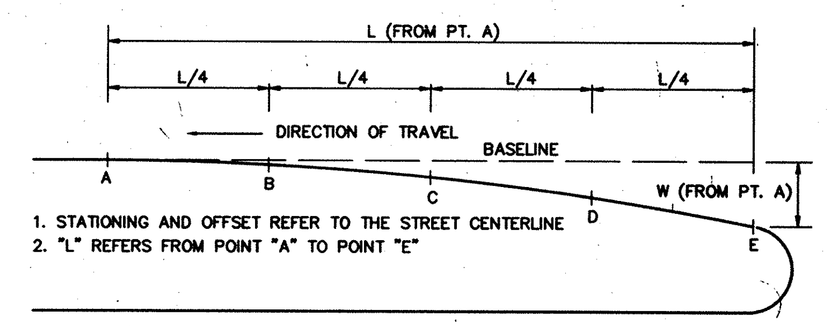

1. STATIONING AND OFFSET REFER TO THE STREET CENTERLINE
2. "L" REFERS FROM POINT "A" TO POINT "E"

METAL GUARD RAIL FLARE DETAIL

NTS

TAPER #1			TAPER #2		
	W=12'	L=37.5		W=12'	L=37.5
PT	STA.	OFFSET	PT	STA.	OFFSET
A	476+23.20	12.00' LT	A	476+19.20	2.00' RT
B	476+32.58	11.25' LT	B	476+09.83	1.25' RT
C	476+41.95	9.00' LT	C	476+00.45	1.00' LT
D	476+51.33	5.25' LT	D	475+91.08	4.75' LT
E	476+60.70	0.00' LT	E	475+81.70	10.00' LT

CONSTRUCTION NOTES

1. CONSTRUCT PCC SIDEWALK PER PF&RD STD. PLAN 1205 ("W" PER PLAN)
2. INSTALL METAL HAND RAILINGS PER DETAIL ON SHT. 4
3. INSTALL REMOVABLE BOLLARD PER DETAIL ON SHT. 4
4. CONSTRUCT TRAFFIC SIGN PER PF&RD STD. 1409 TYPE : R5-3 ("NO MOTORIZED VEHICLES")
5. CONSTRUCT BRIDGE ABUTMENT PER DETAIL ON SHEET 5
6. CONSTRUCT BRIDGE BENT PER DETAIL ON SHEET 6
7. CONSTRUCT TYPE 5 THRIE BEAM BARRIER PER CALTRANS (1992) STANDARD PLAN A77-E
8. INSTALL 4" SOLID WALL HIGH DENSITY POLYETHYLENE DRAINAGE PIPE (ADS N-12 SMOOTH INTERIOR PIPE OR EQUIVALENT)
9. INSTALL 4" HIGH DENSITY POLYETHYLENE FLARED END SECTION (ADS OR EQUIVALENT)
10. INSTALL 4" HIGH DENSITY POLYETHYLENE 11.25 DEGREE VERTICAL BEND (ADS OR EQUIVALENT)

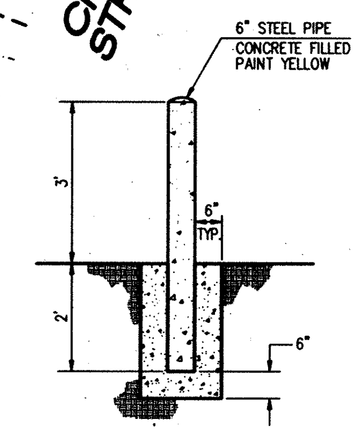

BOLLARD DETAIL

NTS

TRACT 15813
STREET IMPROVEMENTS

NO.	DATE	REVISIONS	APPROVED

REGISTERED PROFESSIONAL ENGINEER GREGORY R. COOKE No. 39478 Expiration 12-31-01 CIVIL STATE OF CALIFORNIA

HUITT-ZOLLARS
Huitt-Zollars, Inc.
15101 Red Hill Avenue, Tustin, CA 92780 · (714) 259-7900

PREPARED UNDER THE SUPERVISION OF
GREGORY R. COOKE — 39478 R.C.E. — 12-31-01 EXPIRES — 6/28/00 DATE

DESIGNED BY P.L.
DRAWN BY LE
CHECKED BY P.L.

PRECISE GRADING PLANS FOR
LADERA RANCH
CROWN VALLEY PEDESTRIAN BRIDGE

SHEET 4 OF 7 SHEETS
JOB NO. 10-0367-12

P:\10036700\10036712\P_BRIDGE\036780R4.DWG 6-23-00 1:37:58 pm pat

JUN 1 0 2000