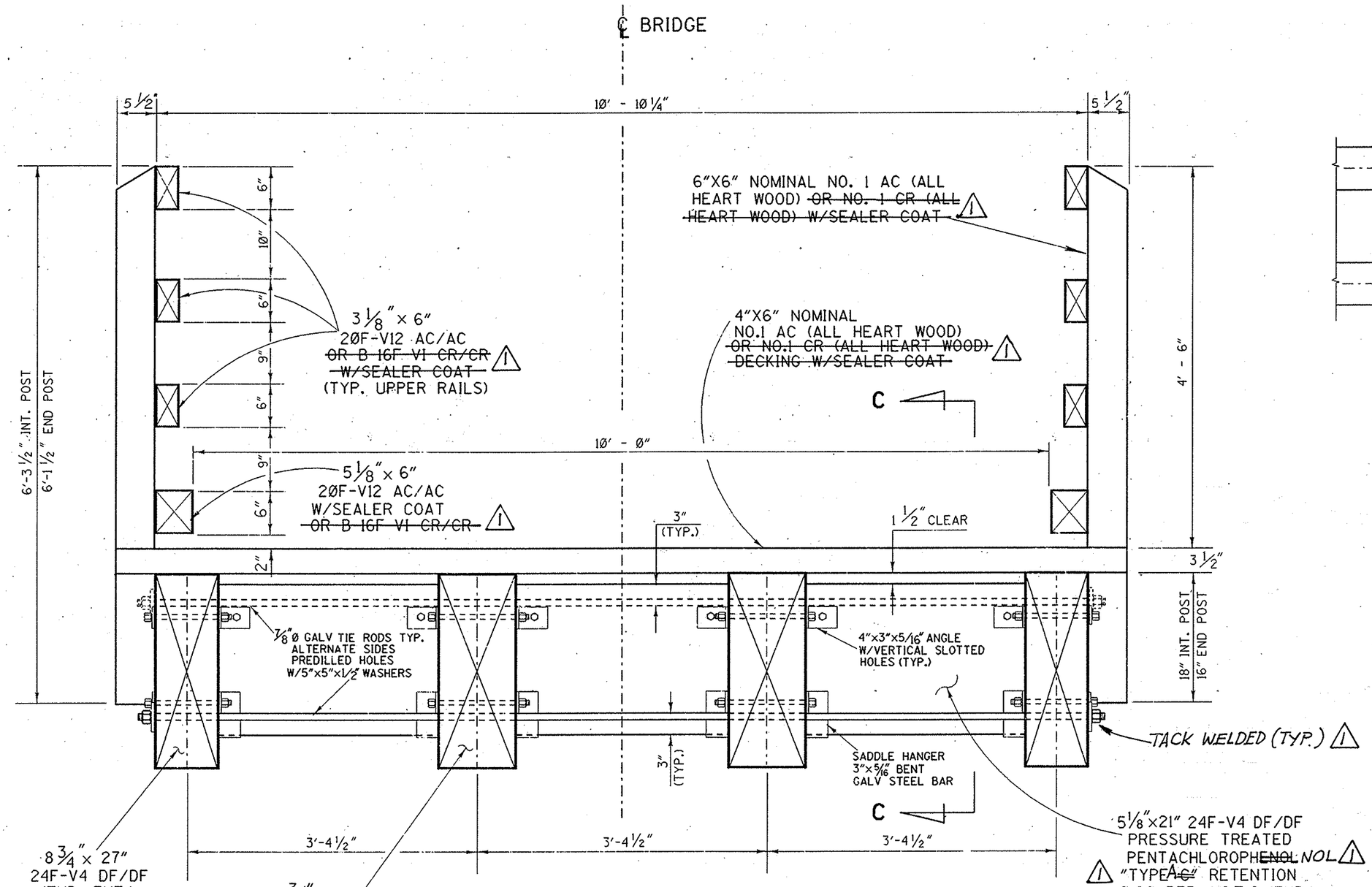

TYPICAL SECTION

SCALE:1"=1'-0"

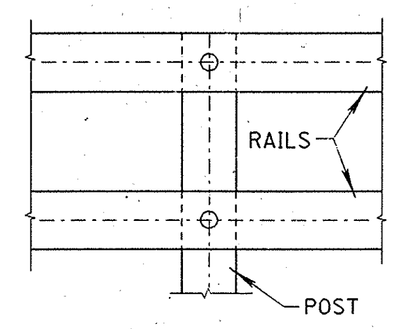

FRONT VIEW

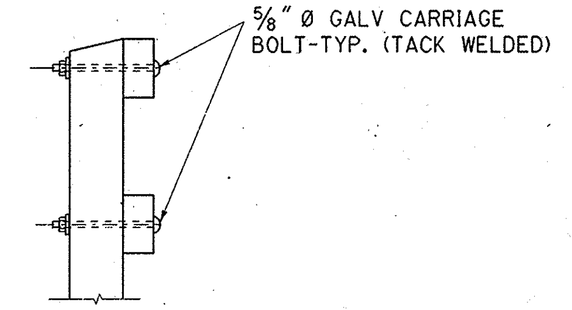

SIDE VIEW

TYPICAL RAIL TO POST CONNECTION

SCALE:1"=1'-0"

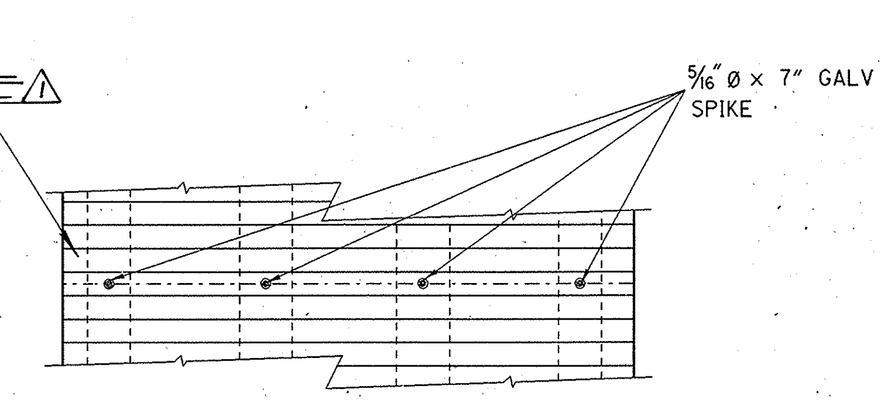

TYPICAL DECK TO GIRDER CONNECTION

SCALE : NONE

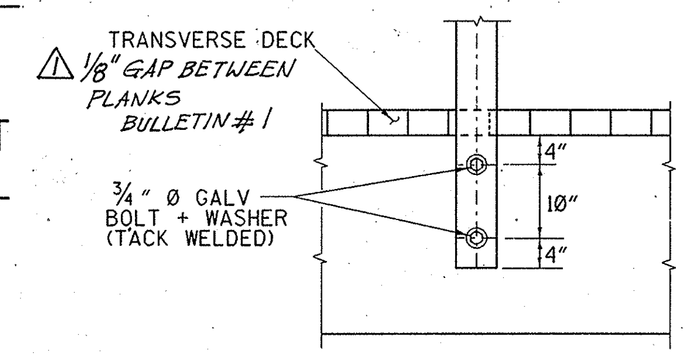

TYPICAL INTERIOR POST TO GIRDER CONNECTION

SCALE : 3/4"=1'-0"

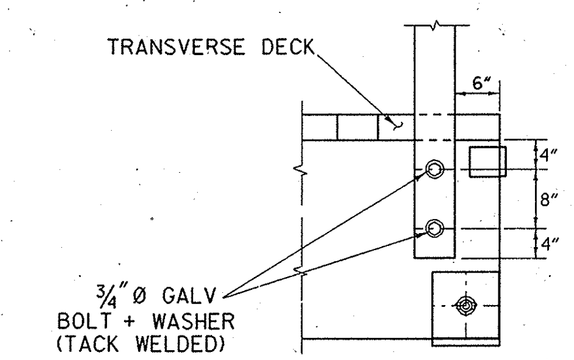

TYPICAL END POST TO GIRDER CONNECTION

SCALE: 3/4"=1'-0"

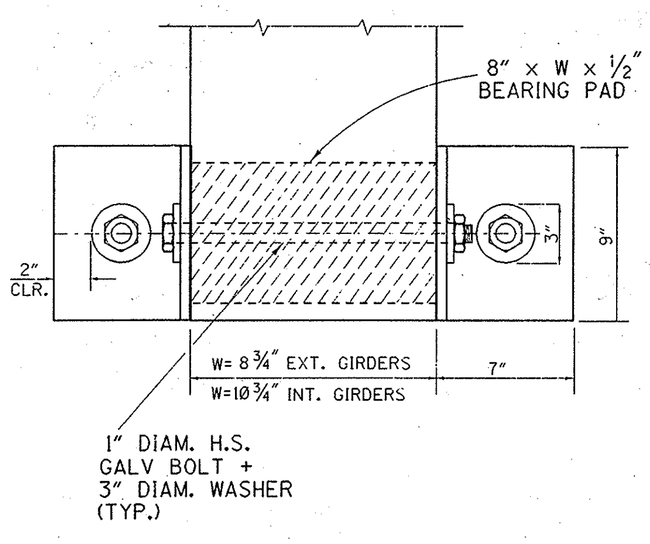

TOP VIEW

SCALE : NONE

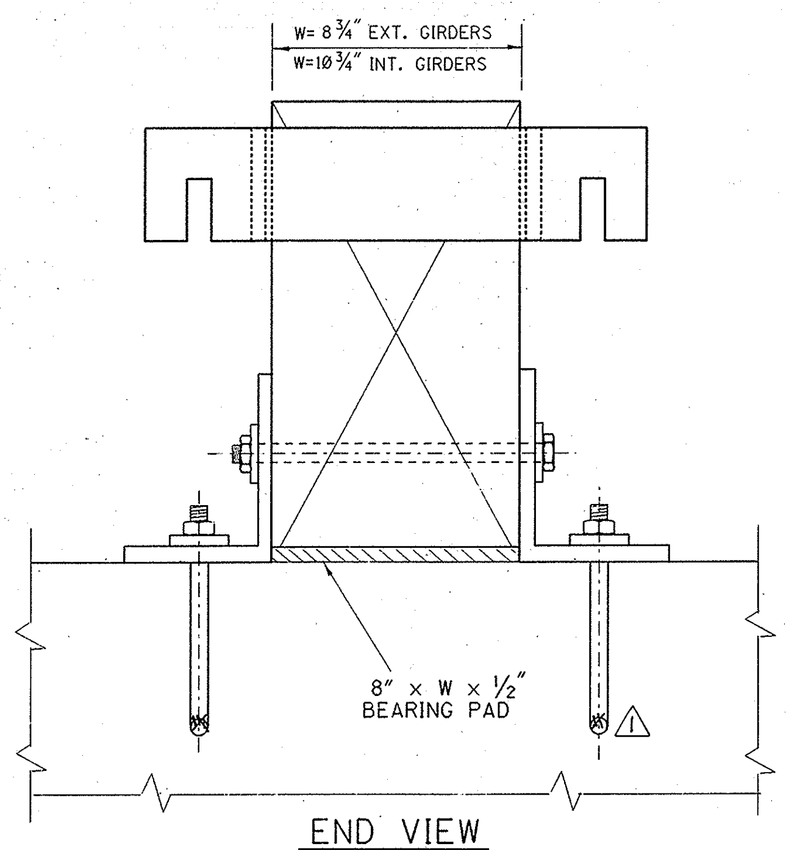

END VIEW

SCALE : NONE

BOTTOM BEARING PLATE

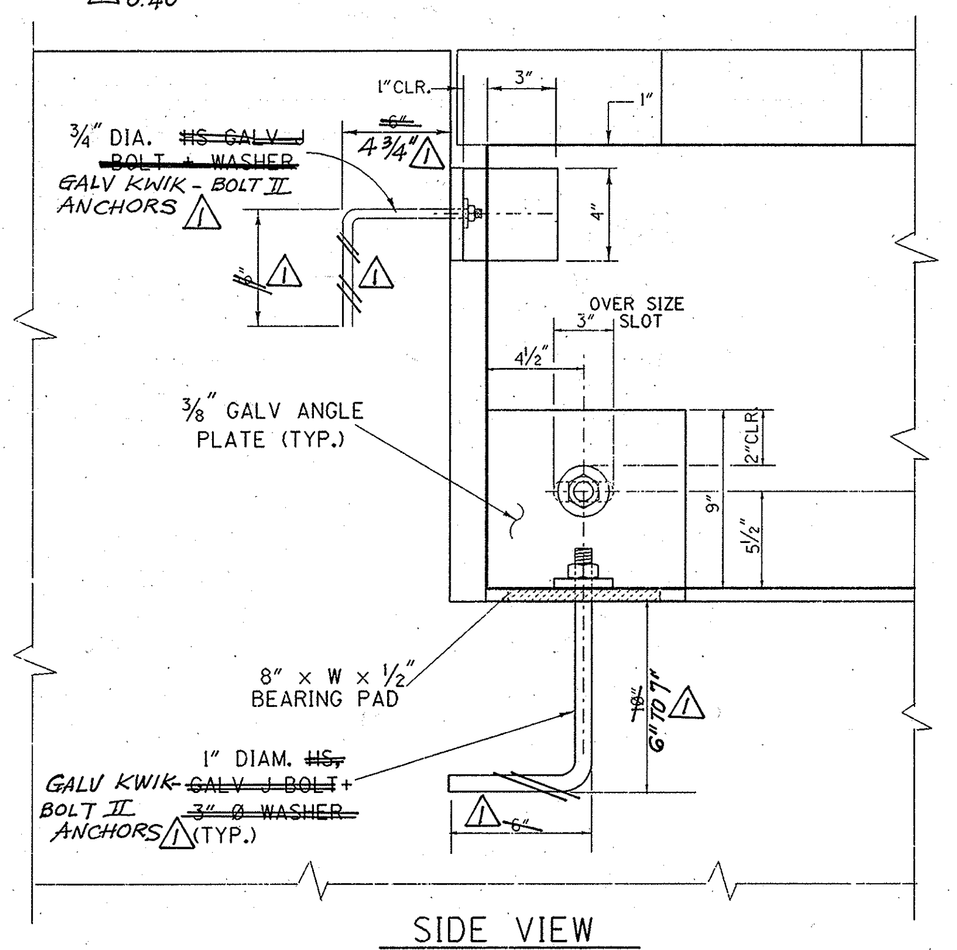

SIDE VIEW

SCALE : NONE

TYPICAL BEARING PLATE DETAIL

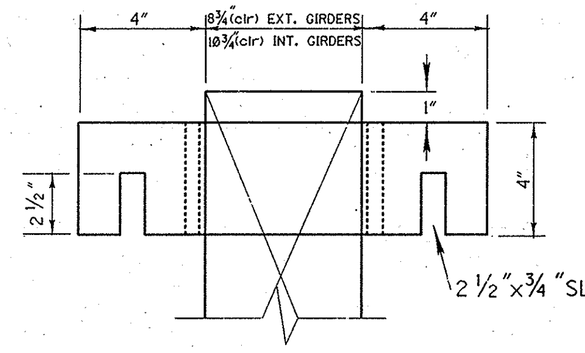

END VIEW

SCALE : NONE

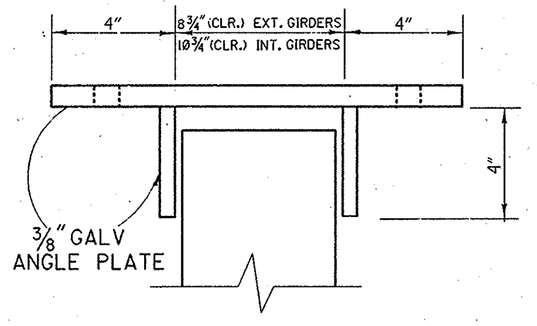

TOP VIEW

SCALE : NONE

TOP BEARING PLATE

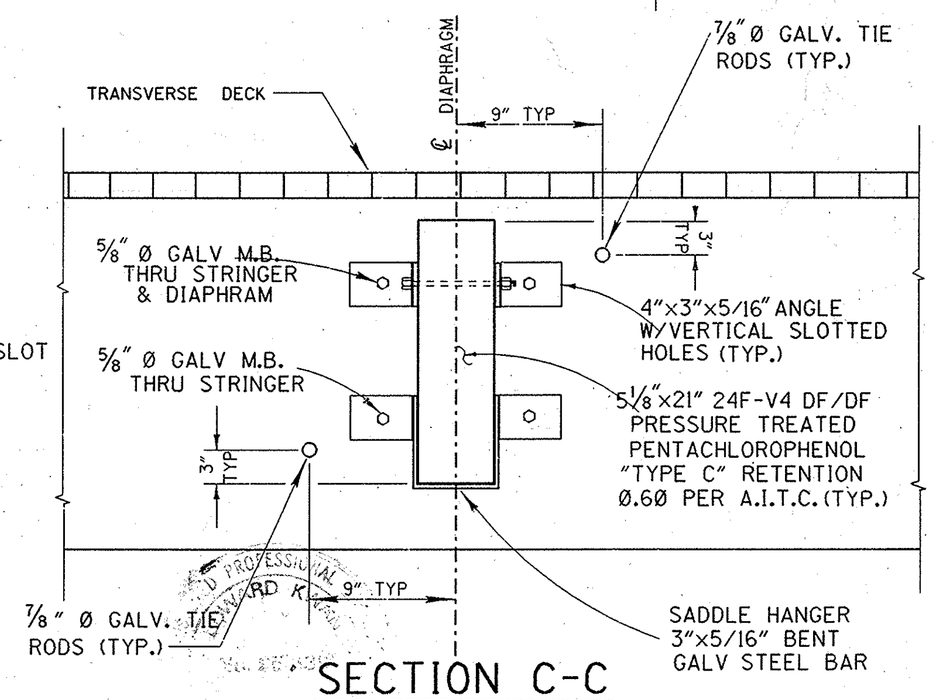

SECTION C-C

SCALE: NONE

MARK	DATE	DESCRIPTION
1	5/4/92	AS SHOWN

REVISIONS

PREPARED UNDER REGISTERED PROFESSIONAL ENGINEER RICHARD A. HARE No. 39595 Exp. 12/31/93 CIVIL STATE OF CALIFORNIA

RICHARD HARE
RCE 39595 (exp. 12-31-93)

8/2/91
DATE

ORANGE COUNTY ENVIRONMENTAL MANAGEMENT AGENCY

ALISO CREEK (J01)
PEDESTRIAN BRIDGE
AT SYCAMORE PARK

TYPICAL SECTION & DETAILS

DESIGNED	RRS		SHEET
DRAWN	H.PHAM	CHECKED RAH	5
SCALE AS SHOWN	DATE 9-91	DRAWING NO.	OF 6