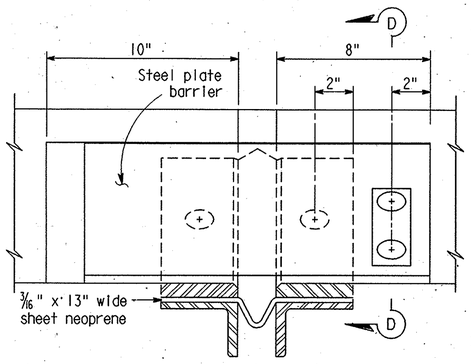

VIEW C-C

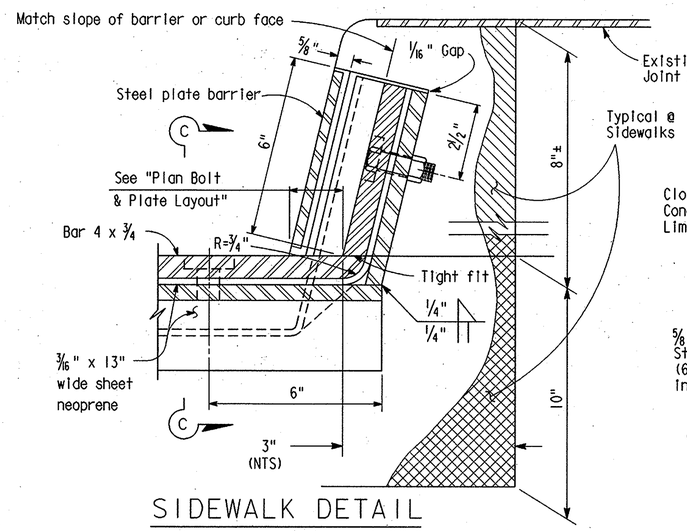

SIDEWALK DETAIL

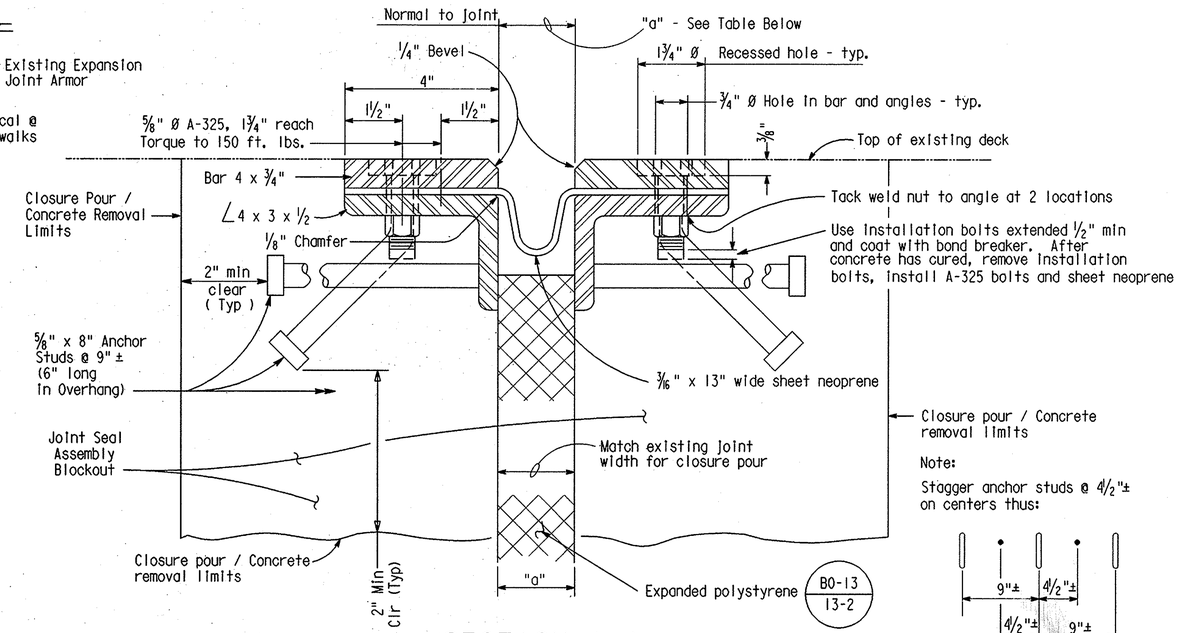

SECTION A-A

Note:

Stagger anchor studs @ 4 1/2"± on centers thus:

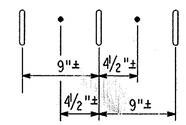

RECORD DRAWING

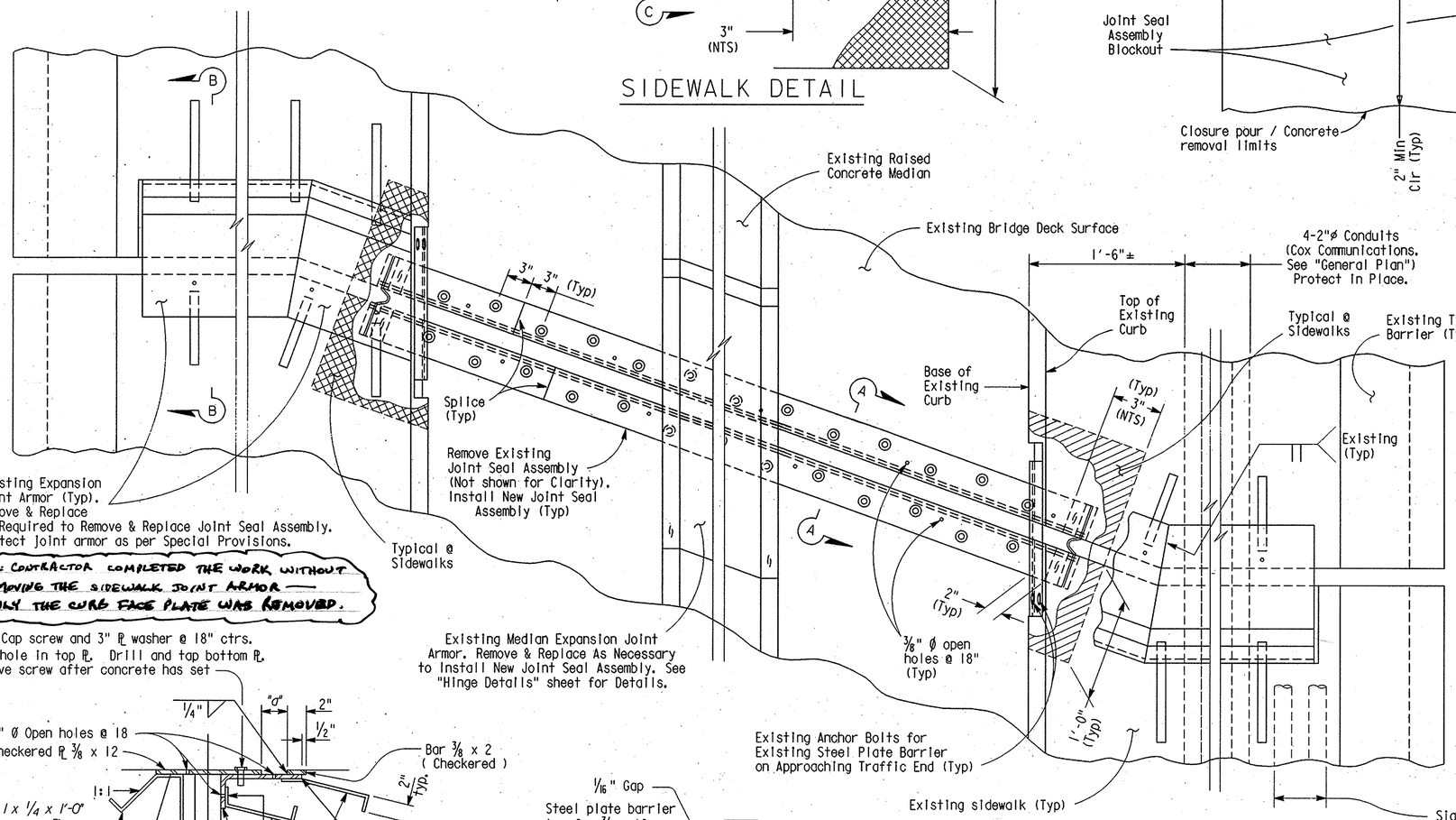

PLAN - BOLT & PLATE LAYOUT

HINGE SHOWN. ABUTMENT 6 SIMILAR.

For Roadway Dimensions, See "General Plan"

Joint Information			"a" Dimensions		
Location	Movement Rating (MR)	Skew	Winter	Spring & Fall	Summer
Hinge	3"	20° 00' 00"	Match Existing Jt Width (1 1/16" ±)		2 3/8"
Abut 6	3 1/2"	29° 15' 08"	Match Existing Jt Width (2 1/16" ±)		2 7/8"

NOTES:

1. All Existing Reinforcing Steel Shall Remain Undamaged & Shall be Carefully Protected In Place During Concrete Removal Operations. Any Existing Reinforcing Steel Damaged by the Contractor Shall be Repaired by the Contractor as Specified in the Special Provisions.
2. Dimensions for "Bridge Removal (Portion)" Same As for "Joint Seal Assembly Blockout"
3. Concrete Strength: All Concrete Shall Be f'c=5000 psi.
4. The Contractor Shall Verify All Controlling Field Dimensions Before Ordering or Fabricating Any Material.
5. Full penetration butt welds may be substituted for fillet welds on all anchor studs.
6. Alternate types of anchor studs may be permitted subject to the approval by the Engineer.
7. Joint seal assembly to be used in conjunction with blockout & closure pour. (See "Abutment Details" sheet and "Hinge Details" sheet and this sheet for limits).
8. Use joint at crown of roadway, at any change in transverse slope in deck and at changes in horizontal direction. Place other joints either on a lane line or at a lane centerline. All metal parts to be galvanized after fabrication.
9. Sheet neoprene shall be fabricated in one continuous piece or joints shall be vulcanized. Neoprene shall be fabricated to bend around corners. 1" holes in neoprene sheets shall be drilled or punched so that the neoprene is not distorted at the time of installation.

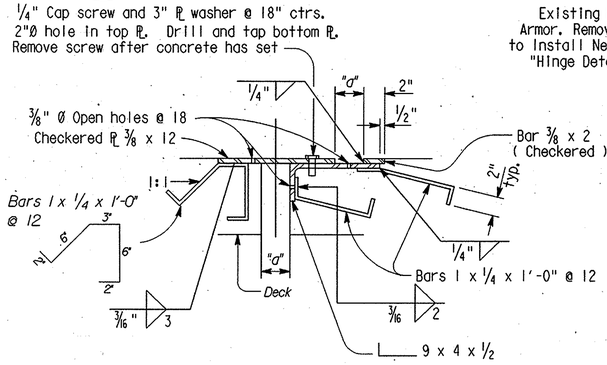

SECTION B-B

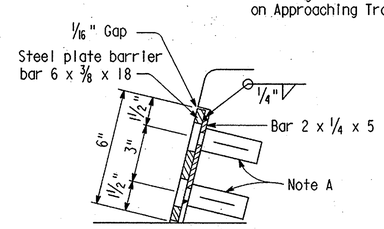

SECTION D-D

LEGEND:

Bridge Removal (Portion)

Joint Seal Assembly Blockout

± Indicates Approximate Dimension of Existing Structure. To Be Verified by Contractor.

ORIGINAL SCALE IN INCHES FOR REDUCED PLANS 0 1 2 3

MARK	DATE	DESCRIPTION
	3/8/02	AS-BUILT CHANGES RWH

REVISIONS

PREPARED UNDER RESPONSIBLE CHARGE OF:

REGISTERED PROFESSIONAL ENGINEER Richard W. Hoisington, Jr. No. C 042287 Exp. 3/31/04 CIVIL STATE OF CALIFORNIA

Rich Hoisington 4/26/01 DATE

ORANGE COUNTY
PUBLIC FACILITIES AND RESOURCES DEPARTMENT

JOINT SEAL ASSEMBLY DETAILS

DESIGNED Rich Hoisington
DRAWN Rich Hoisington
CHECKED Ed Kwan
SCALE AS SHOWN
DATE 4/17/01
DRAWING NO.
SHEET 5 OF 5

Last modified 17-Sep-1999

File Name: d:\projects\osopkwydeck\retro-e\ustnfiles\osodeckjsa-kjnt.dgn
Date Plotted: 18-MAY-2001 09:54