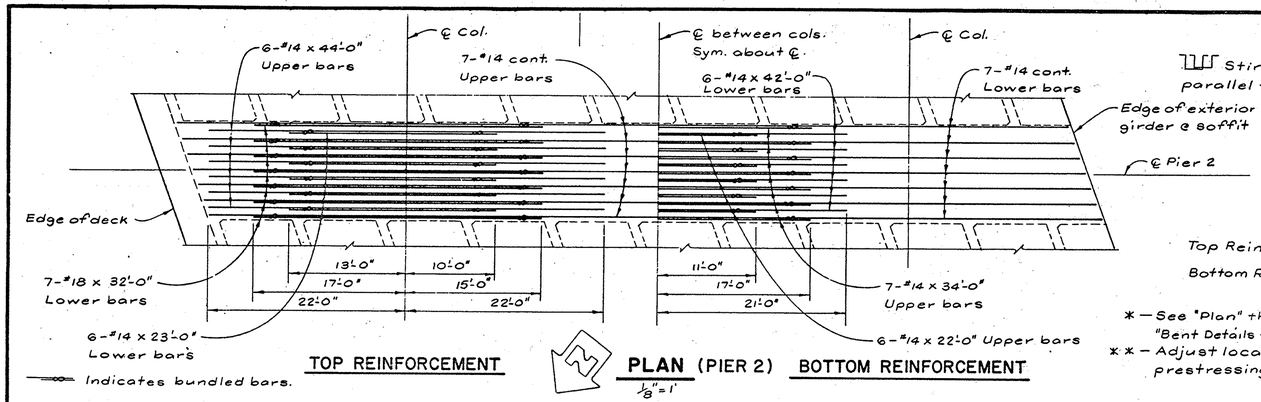

PLAN (PIER 2)
1/8" = 1'

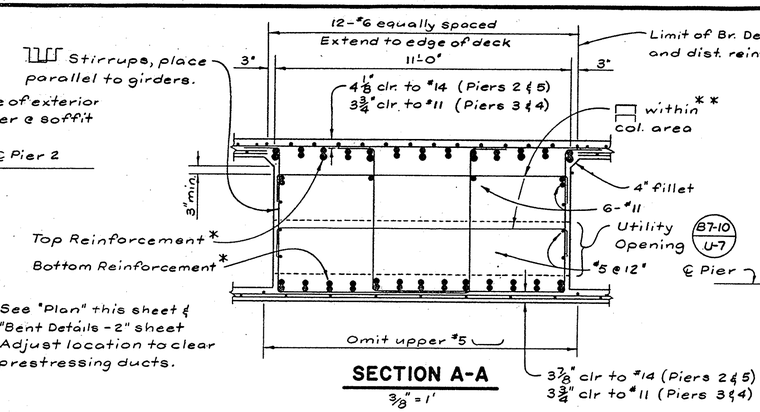

* — See "Plan" this sheet & "Bent Details - 2" sheet
** — Adjust location to clear prestressing ducts.

SECTION A-A
3/8" = 1'

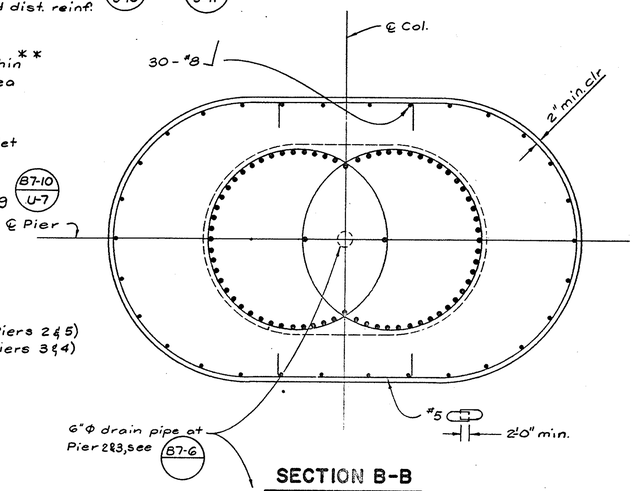

SECTION B-B
3/8" = 1'

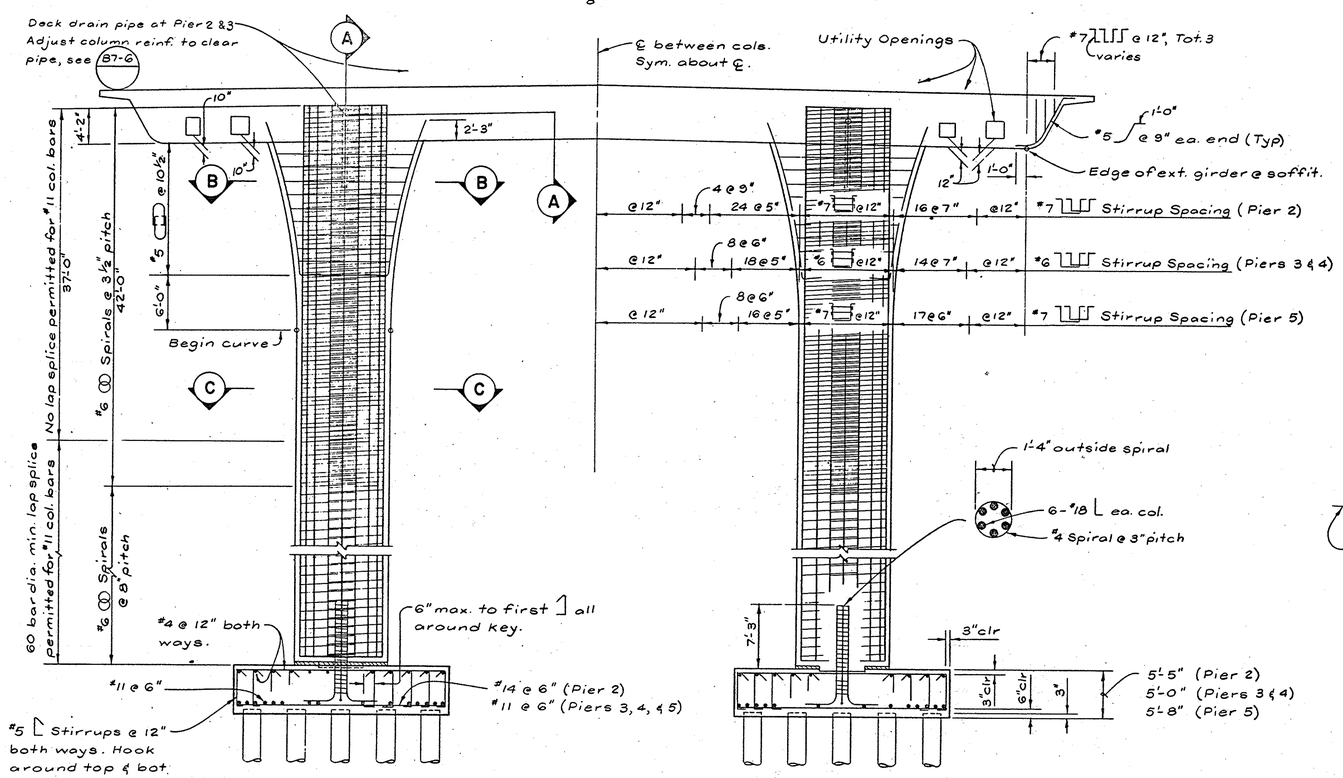

ELEVATION
1/8" = 1'

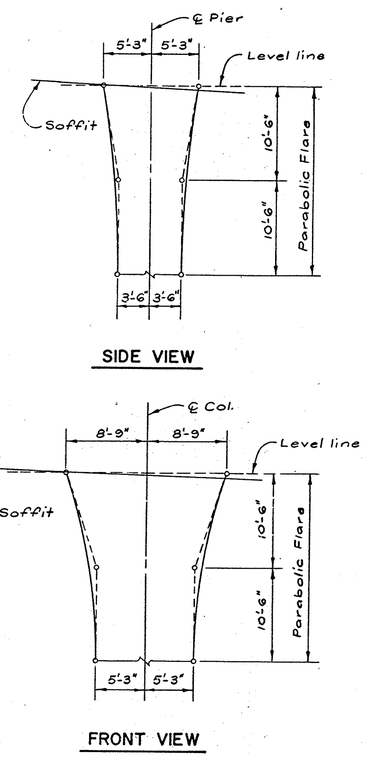

FLARE DETAILS
No Scale

70 - #11 ea. col. (Piers 2 & 5)
60 - #11 ea. col. (Piers 3 & 4)

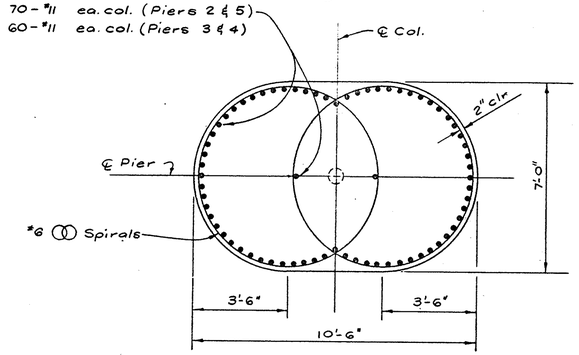

SECTION C-C
3/8" = 1'

1 1/2 0 1 2
3 inches on original drawing

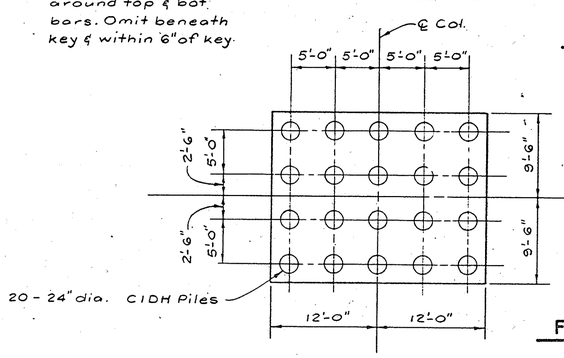

FOOTING PLAN (PIER 2)
1/8" = 1'

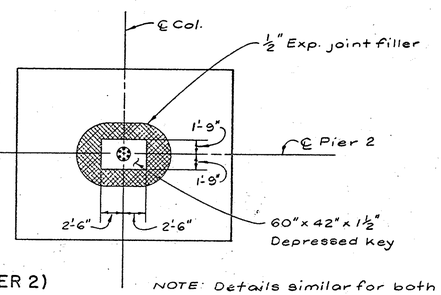

NOTE: Details similar for both columns and footings of any one pier.

REGISTERED PROFESSIONAL ENGINEER
W. MARK ASHLEY
No. C 34299
Exp. 9-30-91
CIVIL
STATE OF CALIFORNIA

McDANIEL ENGINEERING COMPANY, INC.
3960 OLD TOWN AVE., SUITE 207B, SAN DIEGO, CA 92110 - (619)692-1820

ENGINEER OF WORK:
W. Mark Ashley — C34299 — 9-30-91 — 8-10-89
W. Mark Ashley | RCE | EXP. | DATE

MARK	DATE	DESCRIPTION

REVISIONS

DESIGNED ____ DRAWN ____ CHECKED ____

ORANGE COUNTY ENVIRONMENTAL MANAGEMENT AGENCY

OSO PARKWAY BRIDGE OVER ARROYO TRABUCO

PIER DETAILS - I

PREPARED UNDER SUPERVISION OF ____ DATE ____

SCALE	DATE	DWG. NO.	SHEET
AS SHOWN			46/76