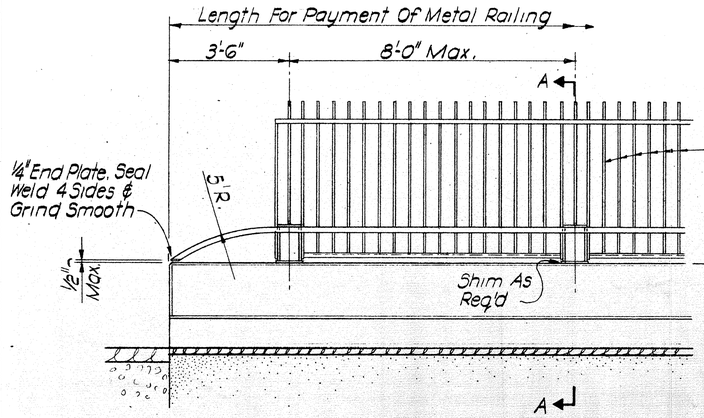

ELEVATION
1/2" = 1'-0"

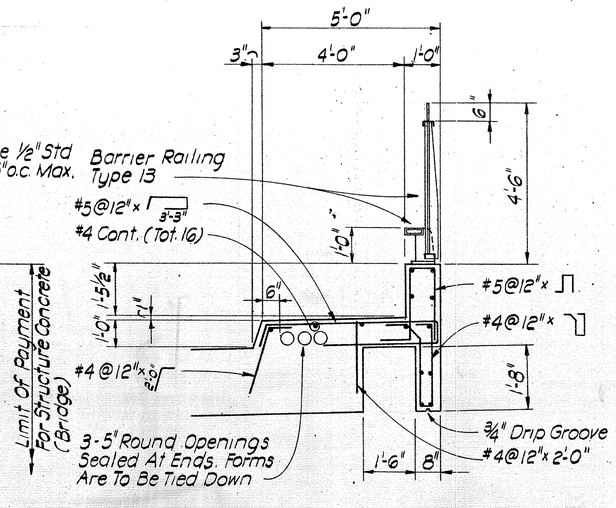

TYPICAL SECTION
1/2" = 1'-0"

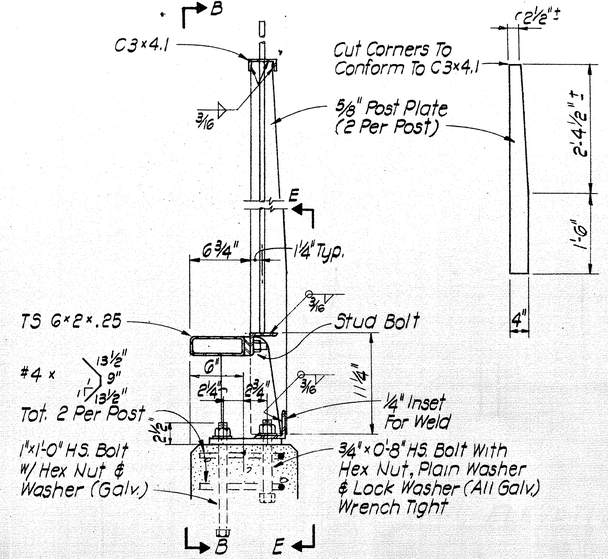

SECTION A-A
1 1/2" = 1'-0"

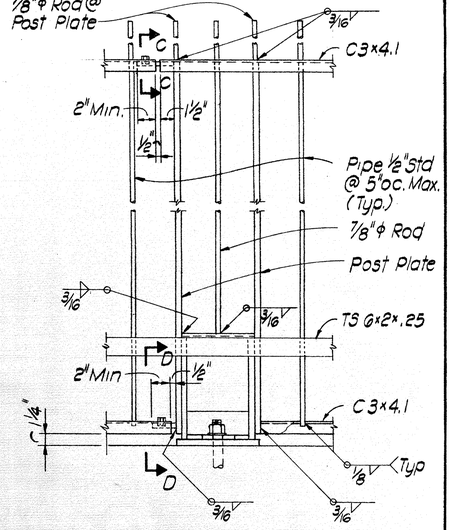

SECTION B-B
1 1/2" = 1'-0"

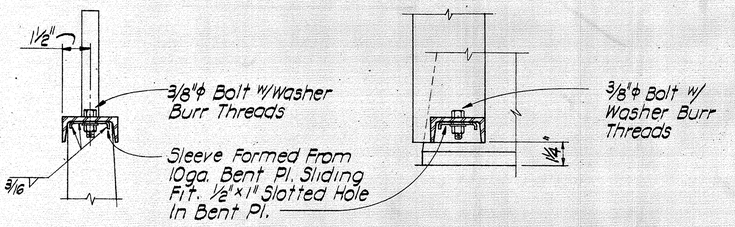

SECTION C-C
3" = 1'-0"

SECTION D-D
3" = 1'-0"

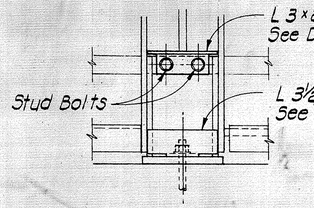

SECTION E-E
1 1/2" = 1'-0"

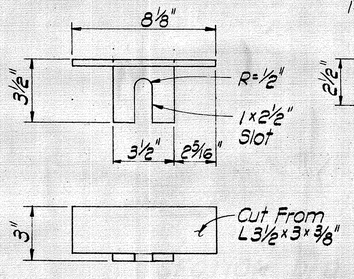

DETAIL F
3" = 1'-0"

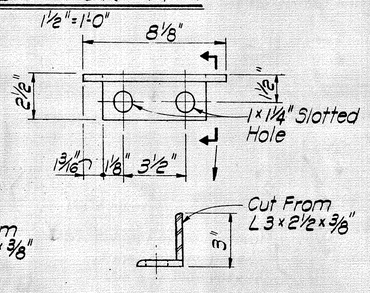

DETAIL G
3" = 1'-0"

NOTES:

Posts Shall Be Normal To Railing

Clearance To Reinforcing In Walk And Parapet To Be 1"

High Strength Rods Threaded Both Ends With 2 Hex Nuts And Washers (All Galv.) May Be Substituted For High Strength Anchor Bolts

Torque Rail To Post Nuts To 175 Ft. Lbs.

Tubing Shall Be Continuous Over Not Less Than Two Posts

Galvanize Rail Assembly After Fabrication.

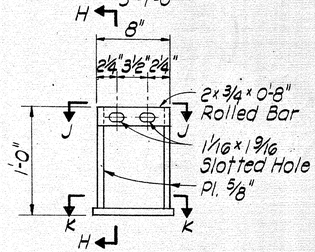

POST ELEVATION
1 1/2" = 1'-0"

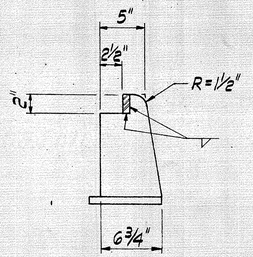

SECTION H-H
1 1/2" = 1'-0"

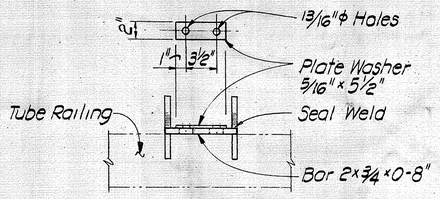

SECTION J-J
1 1/2" = 1'-0"

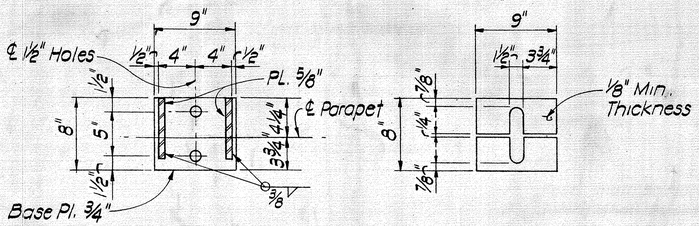

SECTION K-K
1 1/2" = 1'-0"

POST SHIM DETAIL
1 1/2" = 1'-0"

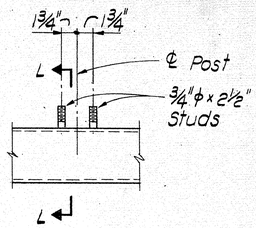

STUD BOLT DETAIL
1 1/2" = 1'-0"

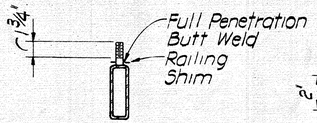

SECTION L-L
1 1/2" = 1'-0"

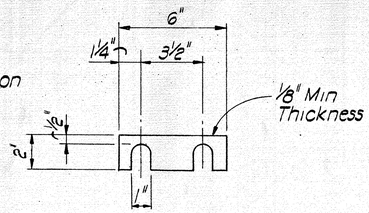

RAILING SHIM DETAIL
3" = 1'-0"

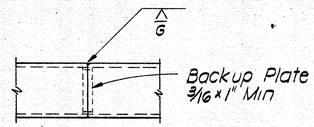

RAILING SPLICE DETAIL
1 1/2" = 1'-0"

MOFFATT & NICHOL, ENGINEERS
LONG BEACH, CALIFORNIA

ORANGE COUNTY ROAD DEPARTMENT

MICHELSON DRIVE BRIDGE
(SD-25)
ACROSS
SAN JOAQUIN CHANNEL

BARRIER RAILING TYPE 13

Dsgn'd — Drwn. CVZ
Chk'd — Date 11-3-75
Approved HEN Date

SCALE Noted

SHEET BR2-6 OF 7