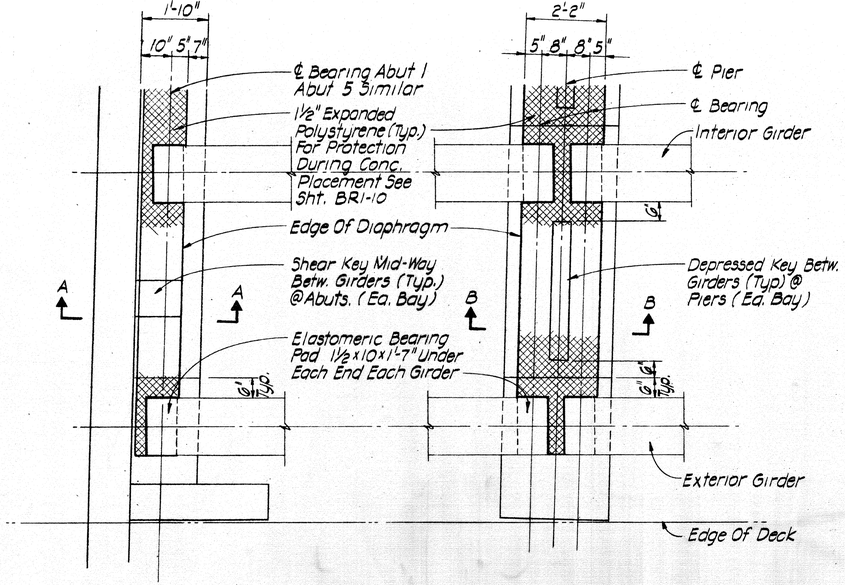

TYPICAL BEARING LAYOUT PLAN
½"=1'-0"

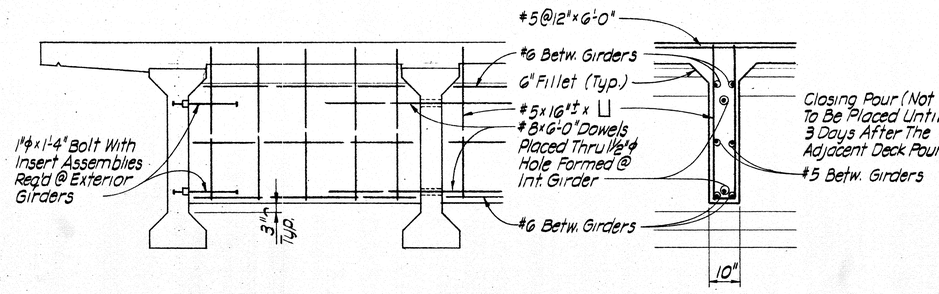

ELEVATION SECTION

INTERMEDIATE DIAPHRAGM
½"=1'-0"

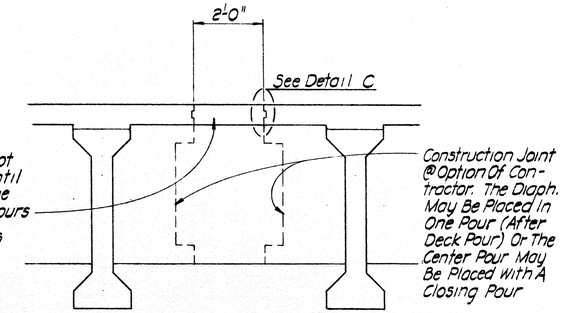

LONGITUDINAL CONSTRUCTION JOINT
½"=1'-0"

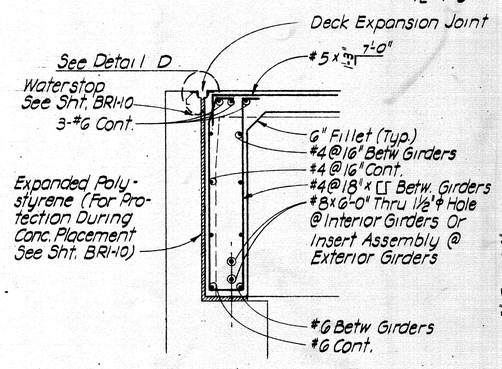

SECTION A-A
½"=1'-0"

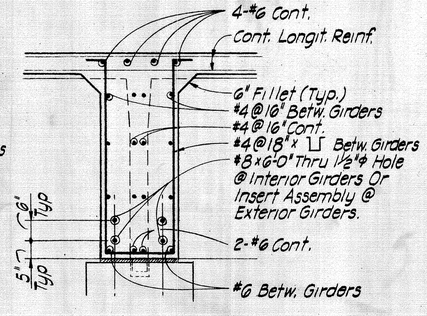

SECTION B-B
½"=1'-0"

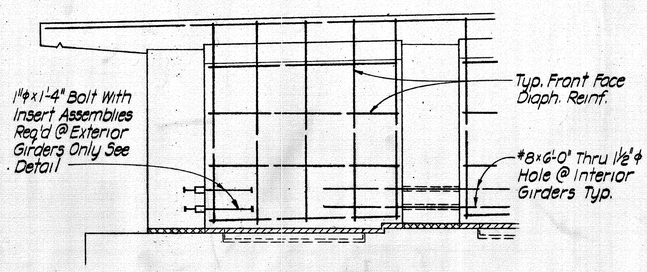

END DIAPHRAGM
½"=1'-0"

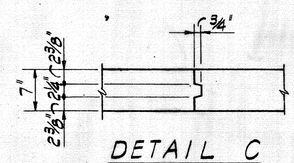

DETAIL C
1"=1'-0"

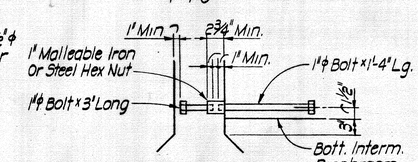

INSERT ASSEMBLY DETAIL
Assembly For Intermediate Diaphragm Shown, Similar At End Diaphragm
1"=1'-0"

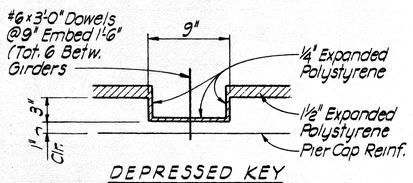

DEPRESSED KEY

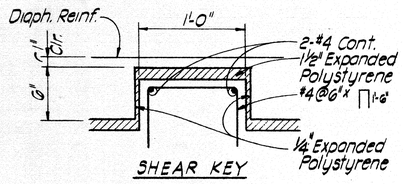

SHEAR KEY

KEY DETAILS
1½"=1'-0"

NOTE:
For Deck Placing Notes See Sht BRI-10

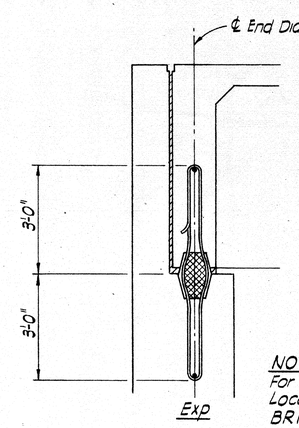

DIAPHRAGM SECTION AT EXPANSION ABUTMENT
½"=1'-0"

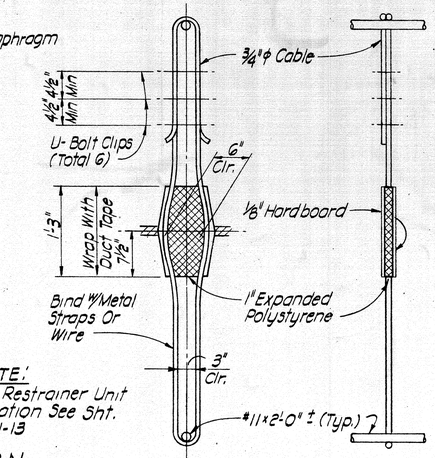

ELEVATION SECTION
1"=1'-0" 1"=1'-0"

NOTE:
For Restrainer Unit Location See Sht. BRI-13

VERTICAL RESTRAINER UNIT

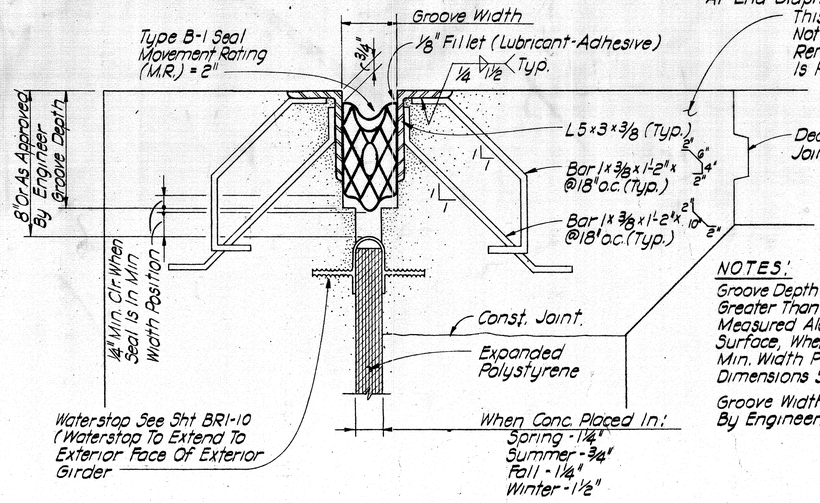

DETAIL D
(Typical Deck Expansion Joint) 3"=1'-0"

This Portion Of Slab Not To Be Placed Until Remainder Of Deck Is Poured.

Deck Construction Joint See Sht. BRI-10

NOTES:
Groove Depth To Be Equal Or Greater Than Depth Of Seal Measured Along The Contact Surface, When Compressed To Min. Width Position (We) Plus Dimensions Shown Above.

Groove Width Shall Be As Ordered By Engineer.

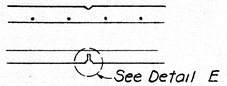

SECTION

Joint May Be Formed With ⅛" Hardboard And Cut Back To The Root Of The Chamfer On The Exposed Face

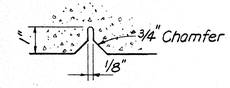

DETAIL E

WEAKENED PLANE JOINT
No Scale

ORANGE COUNTY ROAD DEPARTMENT

MICHELSON DRIVE BRIDGE
(SD-25)
ACROSS
SAN DIEGO CREEK

DECK DETAILS

MOFFATT & NICHOL, ENGINEERS
LONG BEACH, CALIFORNIA

Design'd J.L.E. Drwn. C.J.K.
Chk'd W.D.P. Date 11-13-92
Approved ---- Date ----

SCALE Noted

SHEET BRI-9 OF 14