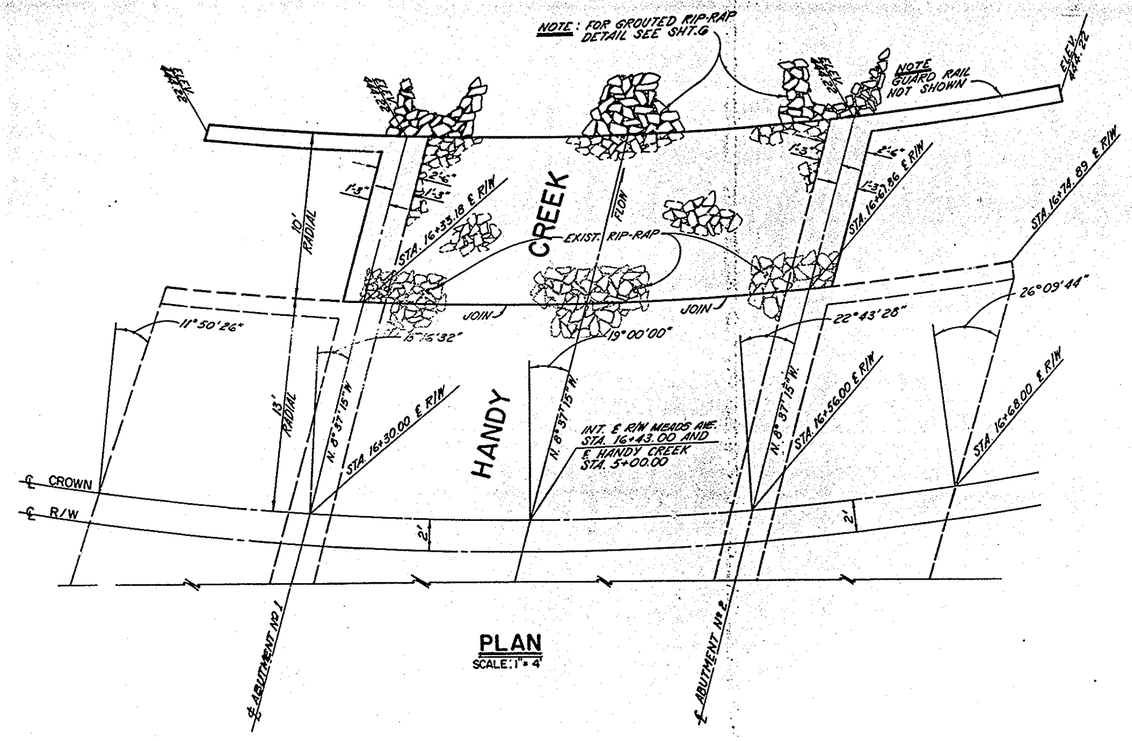

PLAN
SCALE: 1" = 4'

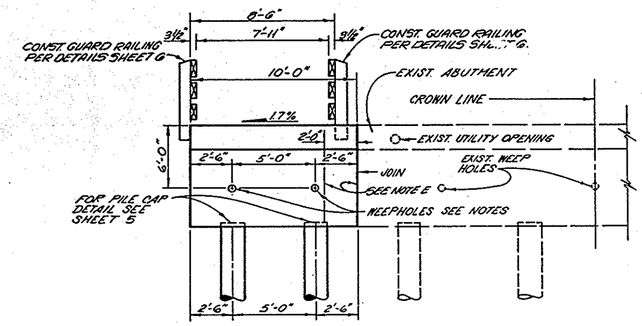

ABUTMENTS Nº 1 & 2
ELEVATION

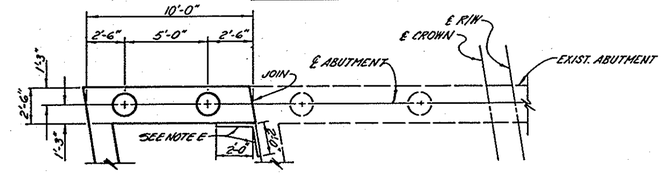

ABUTMENT Nº 1
PLAN

NOTES FOR P.V.C. DRAINS

A. 4" DIA. P.V.C. DRAINS – 3 AT 10'-0" ℄ TO ℄ SPACING, LOCATE 6" ± BELOW FINISH GRADE.

B. 6" SQUARE ALUMINUM OR GALVANIZED STEEL WIRE ¼" MESH HARDWARE CLOTH. (MIN. WIRE DIA. 0.025") ANCHOR FIRMLY TO BACKFACE.

C. PERVIOUS BACKFILL MATERIAL CONTINUOUS BEHIND RETAINING WALL OR ABUTMENT.

D. WEEP HOLES PER CAL TRANS STD. B0-3 BR. DETAIL 3-1.

NOTE E
INSTALL 2'-0" X 2'-0" FULL HEIGHT FILTER FABRIC, NON WOVEN TYPE EMA STD. PLAN 1008.

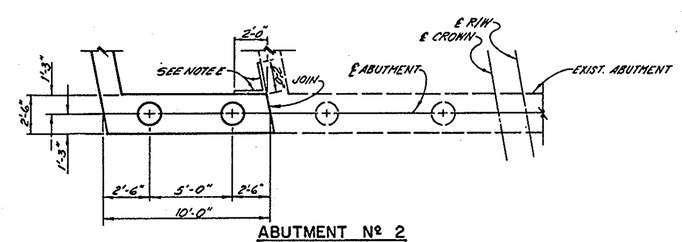

ABUTMENT Nº 2
PLAN

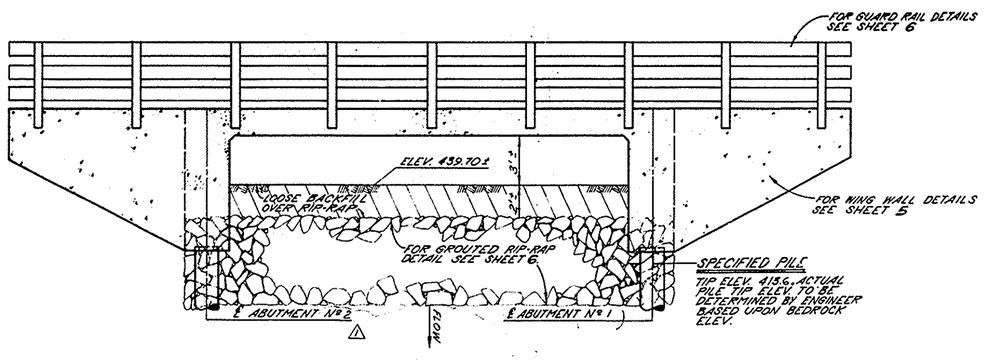

ELEVATION
SCALE: 1" = 4'

TYPICAL PILE DETAIL
NOT TO SCALE

[redacted]

1 1/2 0 1 2 3
4 INCHES ON ORIGINAL DRAWING

MARK	DATE	DESCRIPTION
1	8-12-91	AS-BUILT G.E.

REVISIONS

DESIGNED J.J.B.
DRAWN G.T.C.–T.K. CHECKED J.J.B.

ORANGE COUNTY ENVIRONMENTAL MANAGEMENT AGENCY

MEADS AVENUE BRIDGE
AT
HANDY CREEK CHANNEL (E.08S06)

BRIDGE LAYOUT AND ABUTMENT DETAILS

PREPARED UNDER SUPERVISION OF [signature] 1/27/89 R.C.E. 20801 DATE

SCALE: AS SHOWN | DATE: FEB. 1989 | DWG. NO. | SHEET 3 OF 6

DR. 11 15594