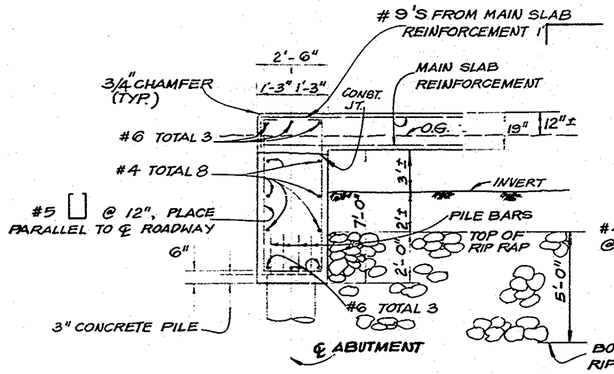

ABUTMENT SECTION

NO SCALE

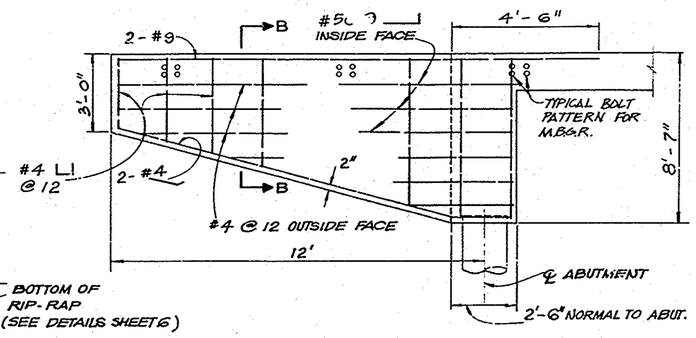

WINGWALL ELEVATION

NO SCALE

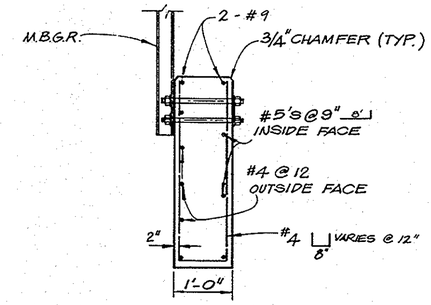

SECTION B-B

NO SCALE

DETOUR NOTES

1. C2 — "ROAD CLOSED"
2. C3 — "ROAD CLOSED AHEAD LOCAL TRAFFIC ONLY"
3. C5 — "← DETOUR"
4. TYPE III BARRICADE, O.C.E.M.A. STD. PLAN 404, TOTAL 4.
5. TYPE N REFLECTORS, O.C.E.M.A. STD. PLAN 401, TOTAL 4.
6. "NOTICE SIGN" (SEE DETAIL A)

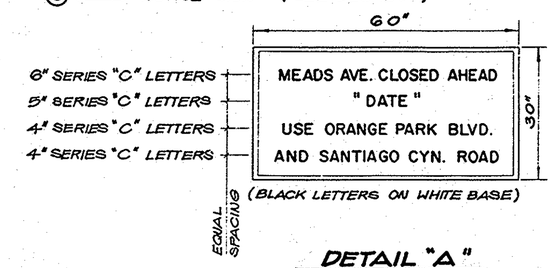

DETAIL "A"

NO SCALE

1 1/2 0 1 2

3 inches on original drawing

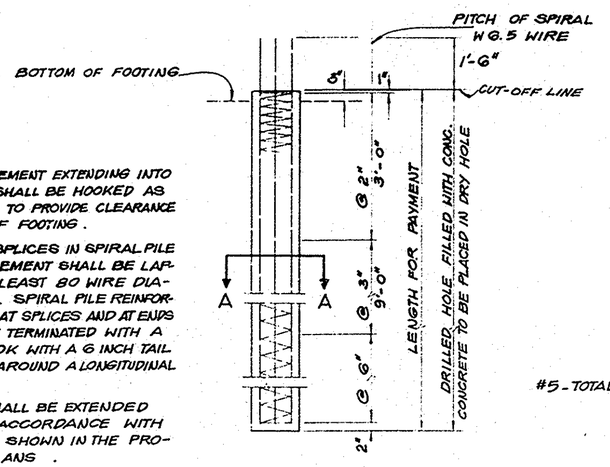

ELEVATION

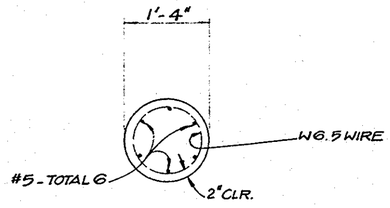

SECTION A-A

NOTES:

REINFORCEMENT EXTENDING INTO FOOTING SHALL BE HOOKED AS REQUIRED TO PROVIDE CLEARANCE TO TOP OF FOOTING.

LAPPED SPLICES IN SPIRAL PILE REINFORCEMENT SHALL BE LAPPED AT LEAST 80 WIRE DIAMETERS. SPIRAL PILE REINFORCEMENT AT SPLICES AND AT ENDS SHALL BE TERMINATED WITH A 135° HOOK WITH A 6 INCH TAIL HOOKED AROUND A LONGITUDINAL BAR.

PILES SHALL BE EXTENDED ONLY IN ACCORDANCE WITH DETAILS SHOWN IN THE PROJECT PLANS.

16" CAST-IN-DRILLED HOLE CONCRETE PILE

NO SCALE

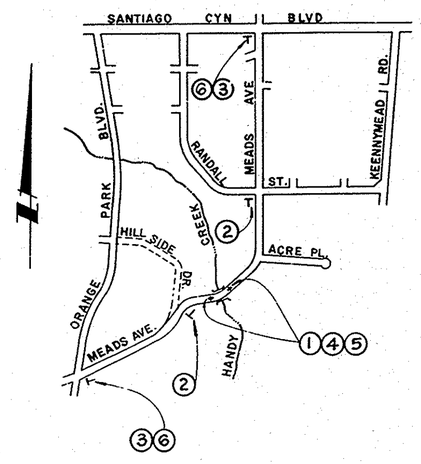

SIGN CHART	
SIGN	QUANTITY
NOTICE SIGN	2
C2	2
C3	2
C5	2

DETOUR PLAN

NO SCALE

ORANGE COUNTY
ENVIRONMENTAL MANAGEMENT AGENCY

MEADS AVENUE BRIDGE
ACROSS
HANDY CREEK CHANNEL (E08S06)

DETOUR PLAN
AND
MISCELLANEOUS DETAILS

MARK	DATE	DESCRIPTION

REVISIONS

DESIGNED J.D.S.
DRAWN H.P., TCR CHECKED V.P.R.

PREPARED UNDER SUPERVISION OF Vincent Kowal 3/27/95 RCE 30829 DATE

SCALE AS SHOWN | DATE | DWG. NO.

SHEET 5 OF 9

DR. 12 (15007)