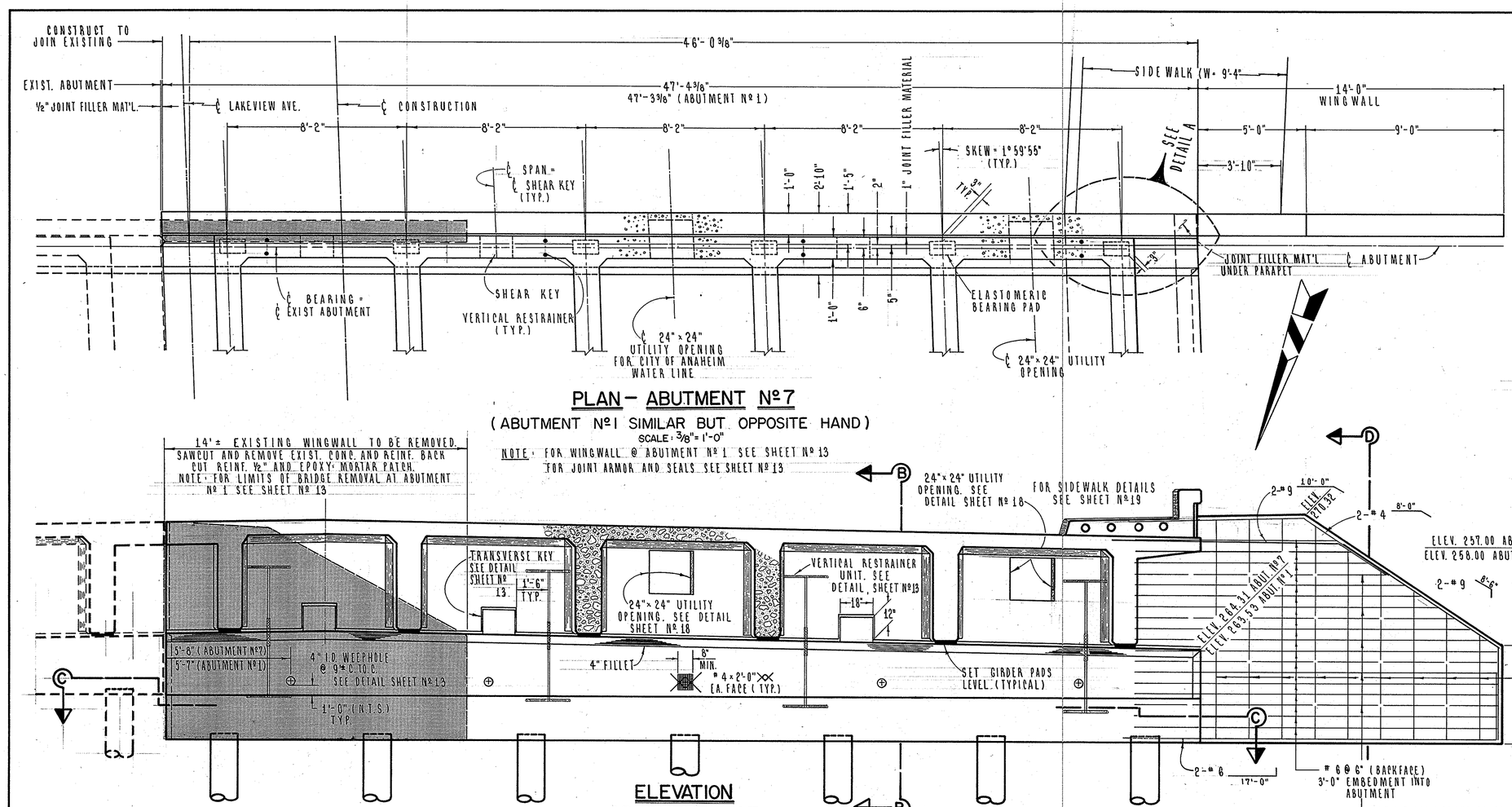

PLAN – ABUTMENT Nº 7

(ABUTMENT Nº 1 SIMILAR BUT OPPOSITE HAND)

SCALE: 3/8" = 1'-0"

NOTE: FOR WINGWALL @ ABUTMENT Nº 1 SEE SHEET Nº 13
FOR JOINT ARMOR AND SEALS SEE SHEET Nº 13

ELEVATION ABUTMENT Nº 7

HORZ.: 3/8" = 1'-0"
VERT.: NOT TO SCALE

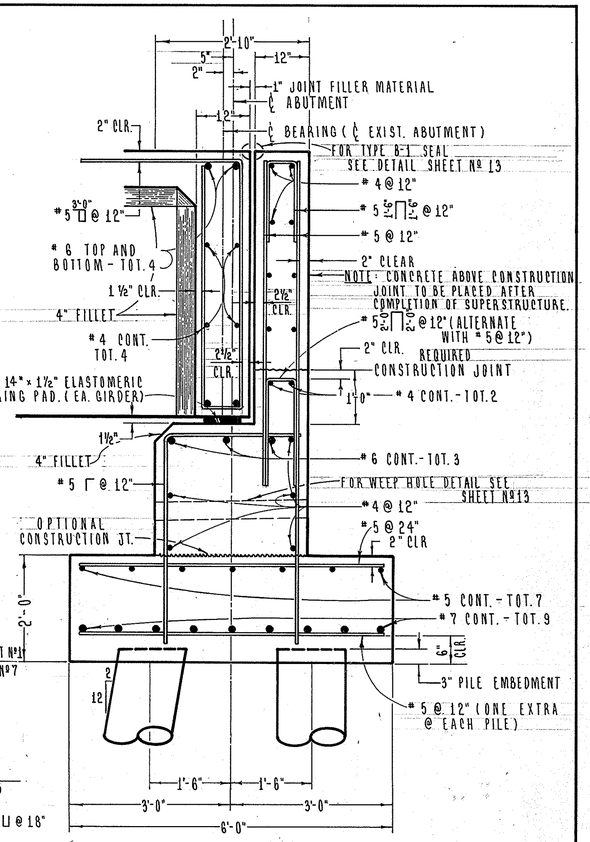

TYPICAL SECTION

SECTION B-B

HORZ.: 3/4" = 1'-0"
VERT.: NOT TO SCALE

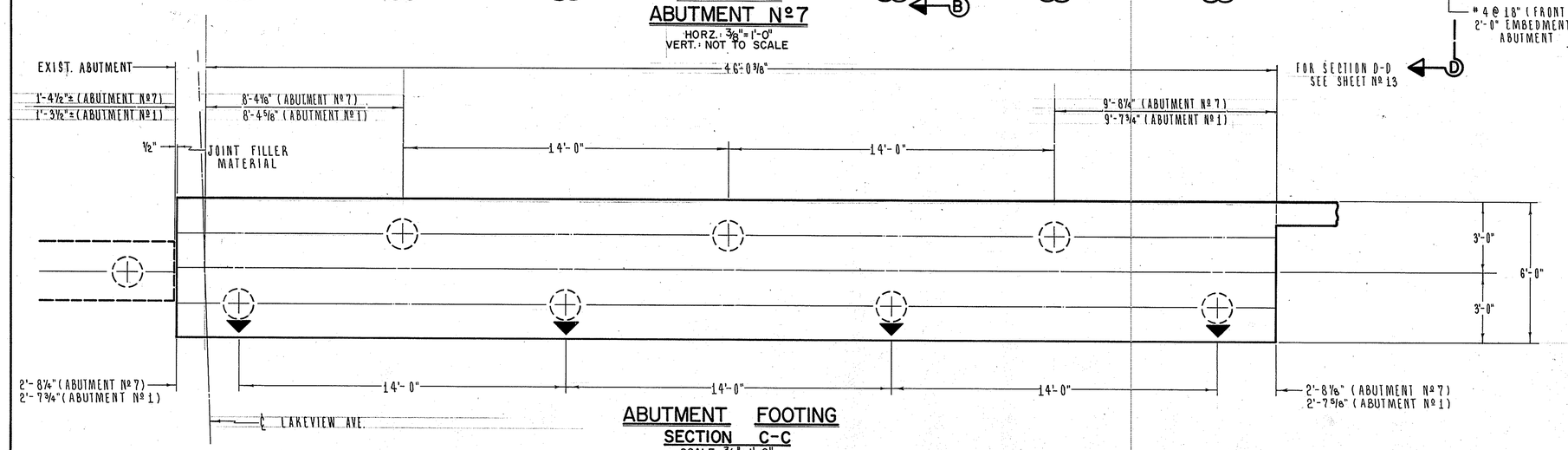

ABUTMENT FOOTING

SECTION C-C

SCALE: 3/8" = 1'-0"

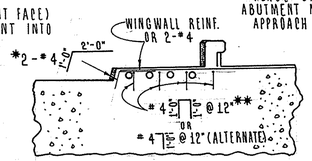

* PLACE REINFORCEMENT IN NEW ABUTMENT BACKWALL

** DRILL 1" ϕ, DEPTH = 6" HOLES @ 12" C. to C. AFTER PLACING DOWELS (#4 x 1'-0") FILL HOLES WITH EPOXY MORTAR. (BACKWALL EXISTING BRIDGE)

ELEVATION OF PORTION OF ABUTMENT WINGWALL

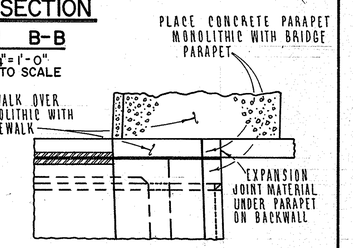

PLAN

DETAIL A

NO SCALE

1 1/2 0 1 2
3 inches on original drawing

#12730
Lakeview Ave. Bridge
Sheet 12 of 22
Red. 24:1
Linen

ORANGE COUNTY ENVIRONMENTAL MANAGEMENT AGENCY

LAKEVIEW AVE. BRIDGE (SA-6) WIDENING OVER SANTA ANA RIVER (E01)

ABUTMENT DETAILS

MARK	DATE	DESCRIPTION	PREPARED UNDER SUPERVISION OF M.A. Murphy 3/78		SHEET
REVISIONS			DATE		12
DESIGNED GENE W. FOSTER			SCALE AS SHOWN	DATE MARCH 1978	DWG. NO.
DRAWN P.J.S.	CHECKED G. Foster				OF 22

DR. # 10 (12730)