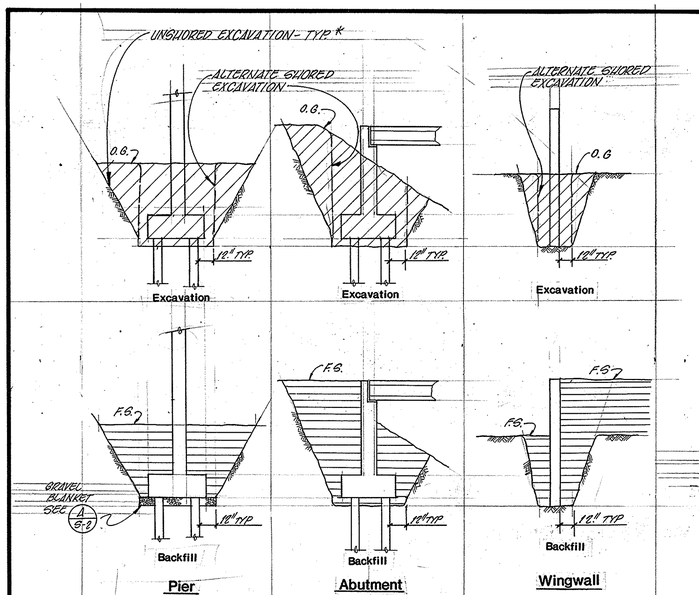

BACKFILL / EXCAVATION DETAIL

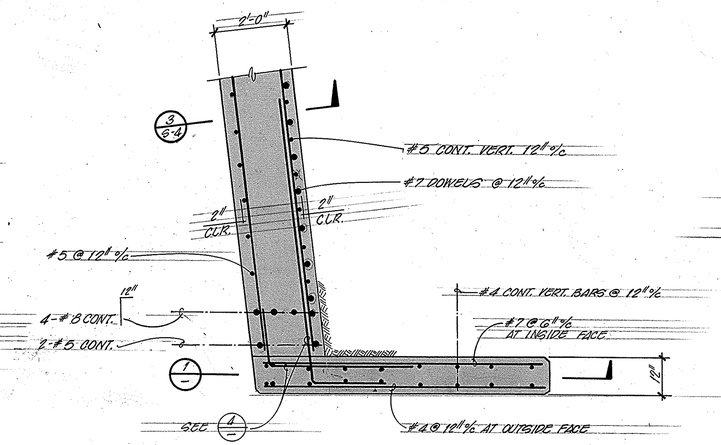

1/2" = 1'-0" (5)

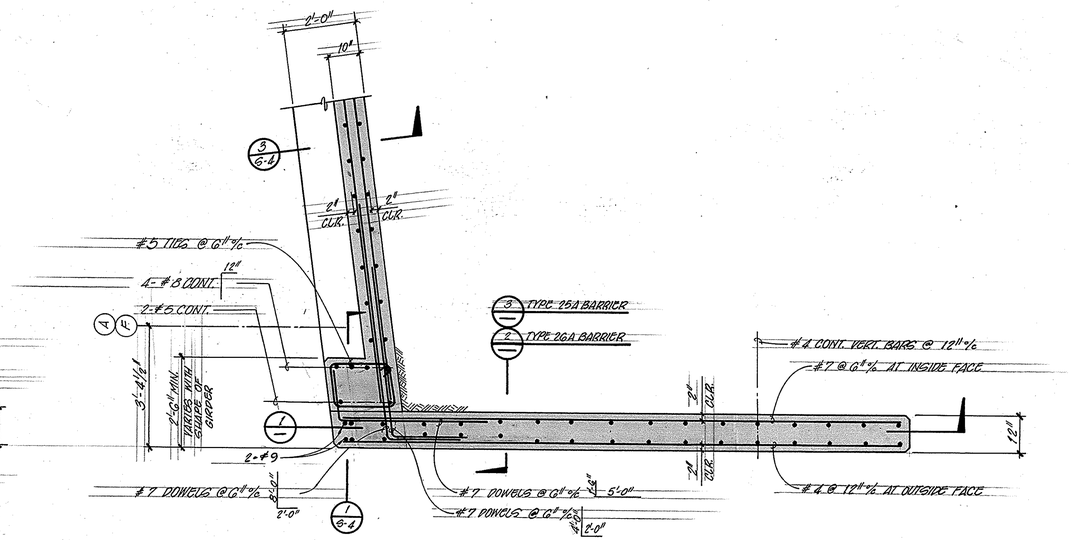

1/2" = 1'-0" (4)

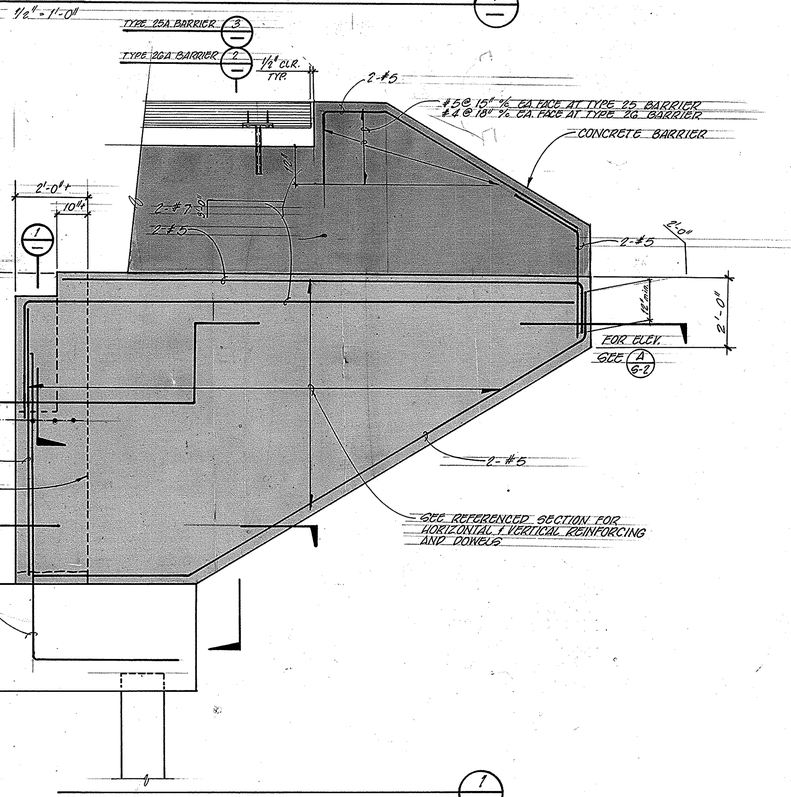

1/2" = 1'-0" (1)

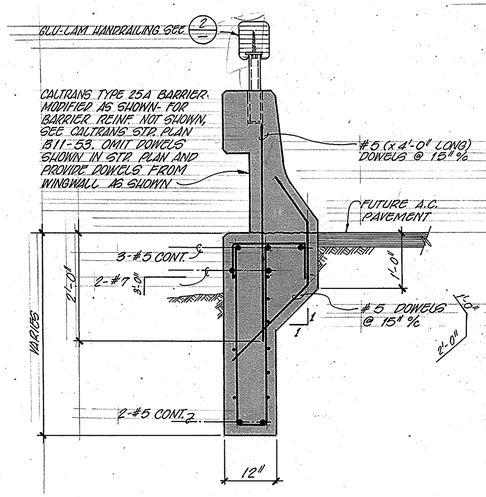

3/4" = 1'-0" (3)

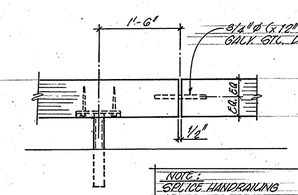

NOTE: SPLICE HANDRAILING AT ENDS OF DECK SLAB & NEAR PICR. & ONLY

HANDRAIL SPLICE DETAIL

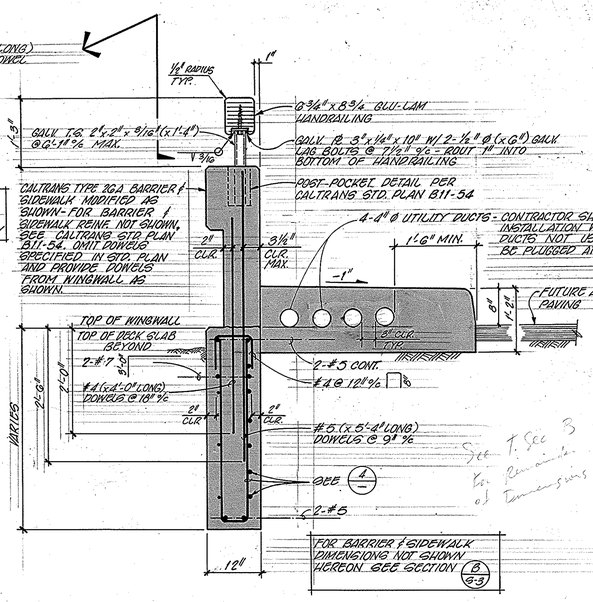

See T. Sec 3 for Remainder of Dimensions

3/4" = 1'-0" (2)

ASL Consulting Engineers
SE 2197
PASADENA (818) 792-3096
SANTA ANA (714) 979-1761
PALM SPRINGS (619) 320-4220

DESIGNED BY D.E.W.	CHECKED BY Z.G.A.	SCALE AS SHOWN	FILE NO. 1122.1
DRAWN BY V.M.R.	DATE 2-84		

DATE	BY	REVISION DESCRIPTION	APP'D	DATE	DES.	DWN.
					CKD.	DATE

Church Engineering, Inc.
Consulting Civil Engineers
Land Planners
Land Surveyors
4020 Campus Dr.
Newport Beach
CA 92660
(714) 540-7377

ALICIA CREEK BRIDGE

WINGWALL DETAILS

TRACT NO. 12091

SHEET S5 OF 1122