PROFILE GRADE

NO SCALE

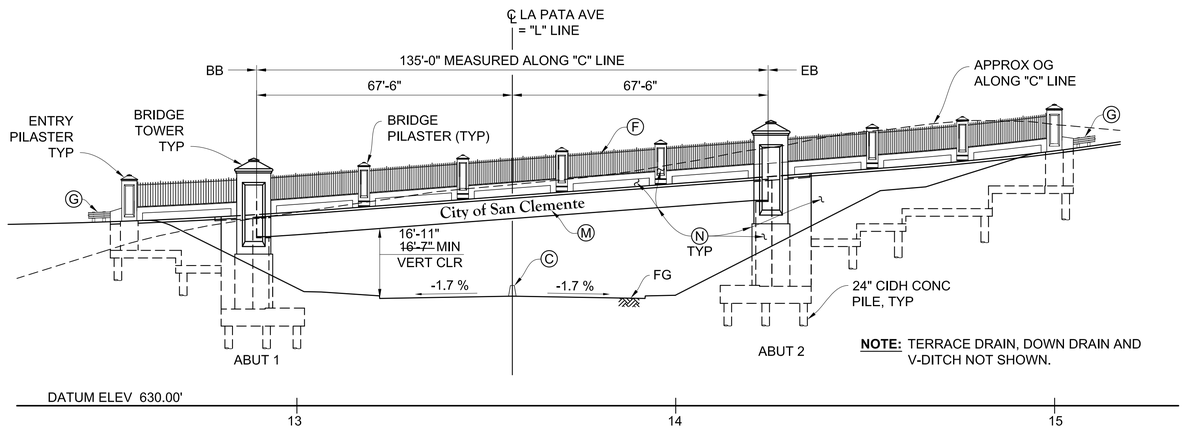

ELEVATION

1" = 20'

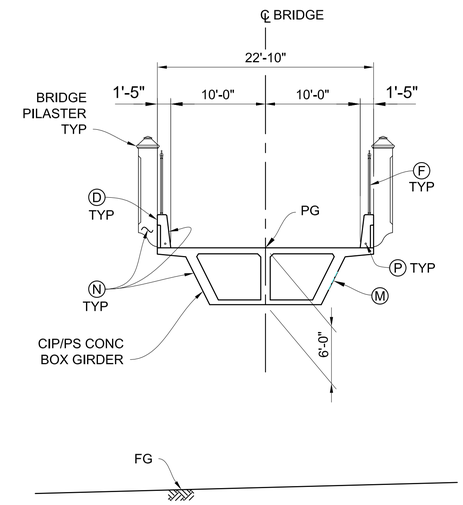

TYPICAL SECTION

1/8" = 1'-0"

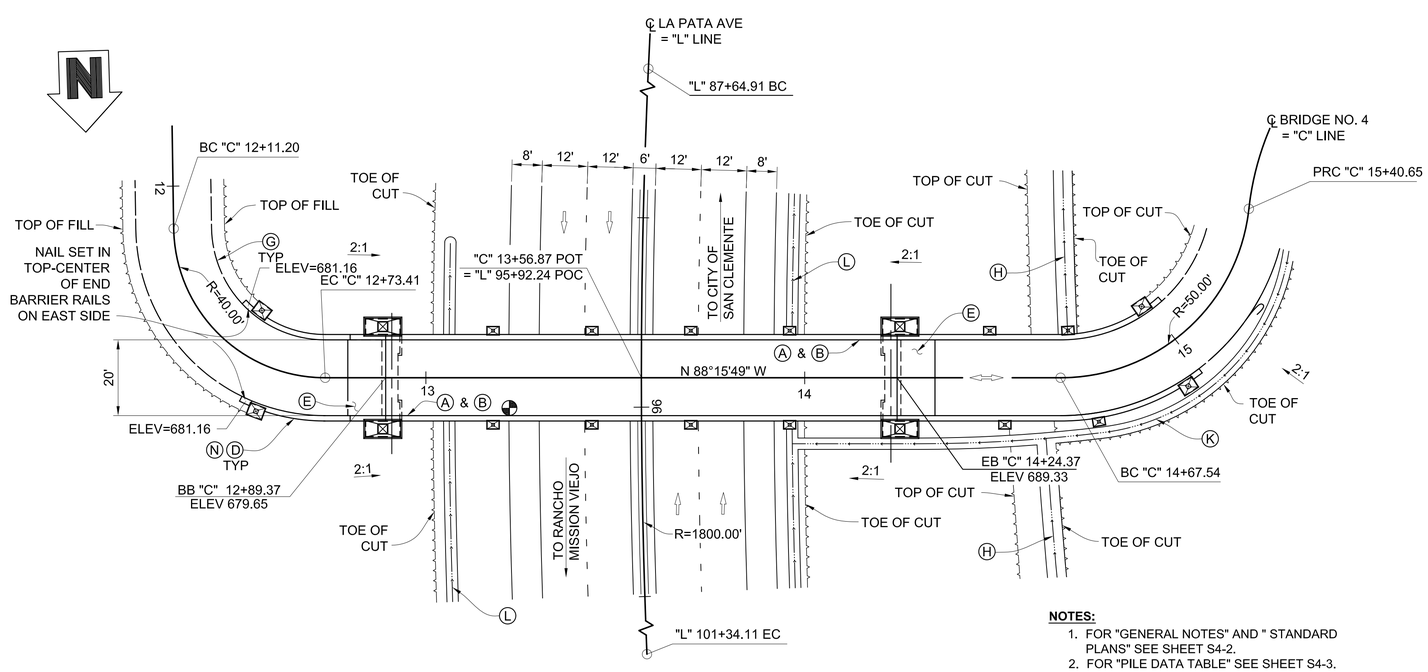

NOTES:

1. FOR "GENERAL NOTES" AND " STANDARD PLANS" SEE SHEET S4-2.
2. FOR "PILE DATA TABLE" SEE SHEET S4-3.

PLAN

1" = 20'

LEGEND:

- INDICATES DIRECTION OF TRAFFIC
- INDICATES REVERSIBLE TRAFFIC
- INDICATES POINT OF MINIMUM VERTICAL CLEARANCE

NOTES:

- Ⓐ PAINT "BR NO. ---"
- Ⓑ PAINT "BRIDGE NAME"
- Ⓒ CONCRETE BARRIER, TYPE 60, SEE "ROAD PLANS", SHEET ST-05
- Ⓓ CONCRETE BARRIER, TYPE 742 (MOD)
- Ⓔ STRUCTURE APPROACH TYPE N (10S)
- Ⓕ PICKET FENCE
- Ⓖ MBGR, SEE "ROAD PLANS", SHEET ST-05
- Ⓗ TERRACE DRAIN SEE "ROAD PLANS", SHEET GR-05
- Ⓚ DOWN DRAIN SEE "ROAD PLANS", SHEET GR-05
- Ⓛ V-DITCH SEE "ROAD PLANS", SHEET GR-05
- Ⓜ PAINT RECESSED ARCHITECTURAL LETTERS (NORTH FACE ONLY)
- Ⓝ STAINED CONC SURFACE
- Ⓟ FUTURE LIGHTING CONDUIT

INDEX TO PLANS

AS-BUILT

COUNTY OF ORANGE CALIFORNIA

MARK	DESCRIPTION	DATE	APPR.

PREPARED UNDER THE RESPONSIBLE CHARGE OF:

REGISTERED PROFESSIONAL ENGINEER — QUOC TRONG NGUYEN — No.C71743 Exp.12/31/13 — CIVIL — STATE OF CALIFORNIA

Q. NGUYEN
RCE: C 71743 (EXP.12-31-13)

JULY 16, 2013
DATE

DESIGNED BY: QN
CHECKED BY: GR
DRAWN BY: NL
DRAWING CODE:
JOB NO. 11017
PLOT DATE: 09/15/2016
SCALE: AS SHOWN

COUNTY OF ORANGE
OC PUBLIC WORKS

TRANSYSTEMS Engineers
10370 HEMET STREET, Suite 230
RIVERSIDE, CA 92503
Tel: (951) 687-1005

LA PATA AVENUE GAP CLOSURE
BRIDGE NO. 4

GENERAL PLAN

Sheet Reference Number

S4-1

W:\11017 La Pata Ave Gap Closure\Construction Supports\As-builts\Bridge No. 4\20160831\S4-1 General Plan.dwg, Layout: S4-1 - General Plan, Sep 01 2016 5:05pm

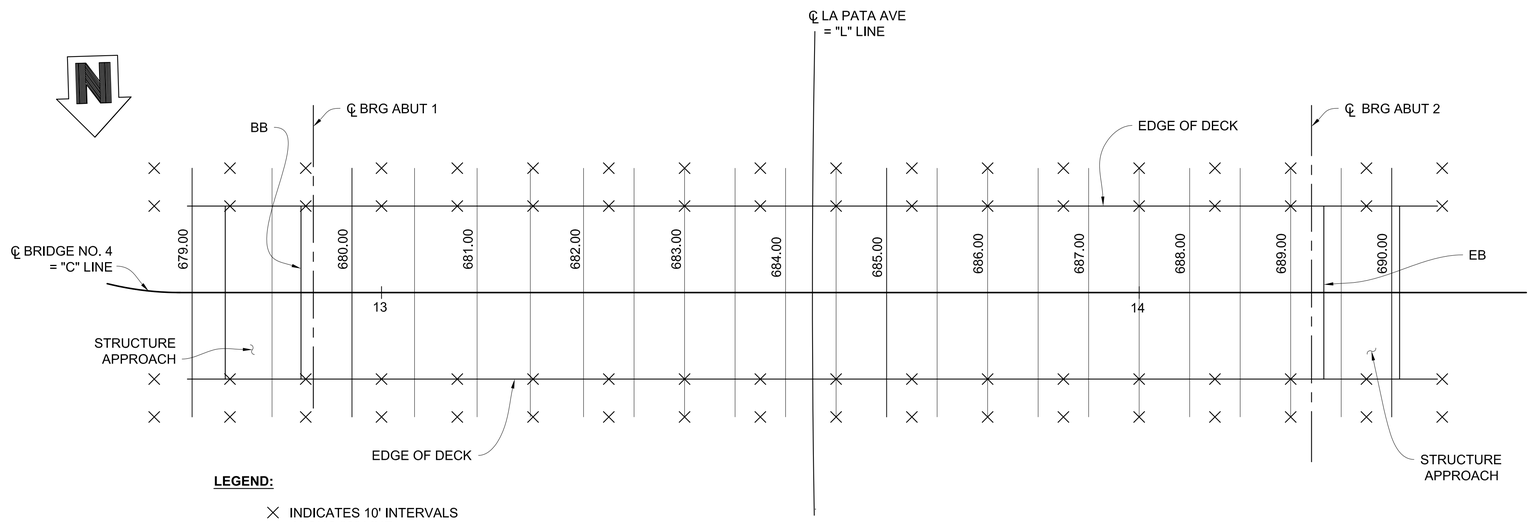

LEGEND:

× INDICATES 10' INTERVALS ALONG "C" LINE.

NOTES:

1. CONTOURS INTERVAL = 0.5'.
2. CONTOURS DO NOT INCLUDE CAMBER.

PLAN

1" = 10'

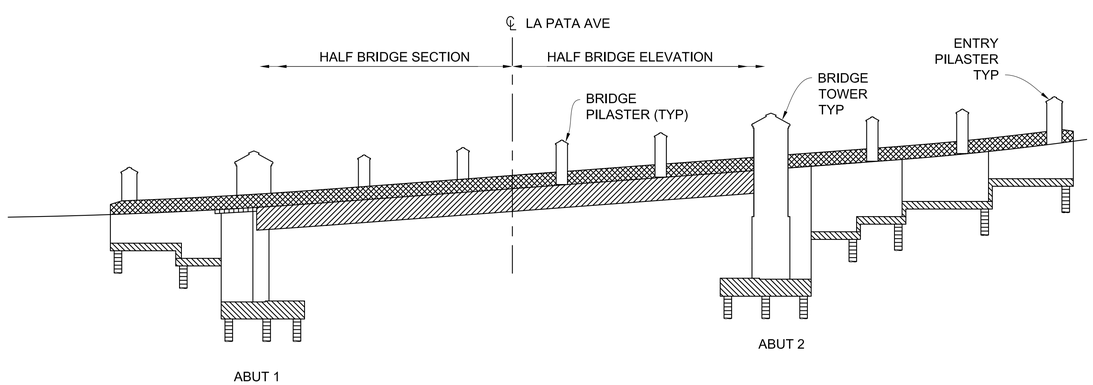

CONCRETE STRENGTH AND TYPE LIMITS

1" = 20'

LEGEND:

- STRUCTURAL CONCRETE, BRIDGE
- STRUCTURAL CONCRETE, BRIDGE (SEE "PRESTRESSING NOTES" ON SHEET S4-13)
- STRUCTURAL CONCRETE, BRIDGE FOOTING
- STRUCTURAL CONCRETE, APPROACH SLAB (TYPE N)
- 24" CIDH CONC PILING (f'c = 4.0 ksi @ 28 DAYS)
- CONC BARRIER TYPE 742 (MOD) (f'c = 4.0 ksi @ 28 DAYS)

GENERAL NOTES
LOAD AND RESISTANCE FACTOR DESIGN

DESIGN:	AASHTO LRFD BRIDGE DESIGN SPECIFICATIONS, FOURTH EDITION WITH CALIFORNIA AMENDMENTS, PREFACE DATED NOVEMBER 2011.
SEISMIC DESIGN:	CALTRANS SEISMIC DESIGN CRITERIA (SDC) VERSION 1.6 DATED NOVEMBER 2010.
DEAD LOAD:	INCLUDES 35 psf FOR FUTURE WEARING SURFACE.
LIVE LOADING:	HL93 AND PERMIT DESIGN LOAD.
SEISMIC LOADING:	SOIL PROFILE: Type D SHEAR WAVE VELOCITY V_{S30} = 305 m/s MOMENT MAGNITUDE: 7.7 MAX PEAK GROUND ACCELERATION: 0.429g

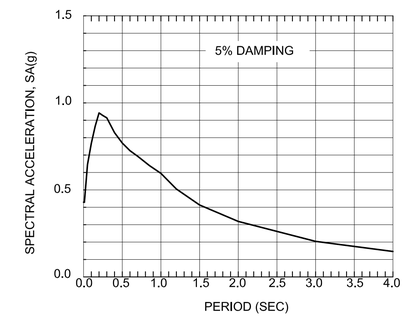

CONCRETE:	fy = 60 ksi f'c = 4.0 ksi n = 8 SEE "PRESTRESSING NOTES" ON SHEET S4-13
STRUCTURAL STEEL:	fy = 36 ksi ASTM A36

STANDARD PLANS 2010 EDITION

	PLAN NO.	TITLE
	A10A	ABBREVIATIONS (SHEET 1 OF 2)
	A10B	ABBREVIATIONS (SHEET 2 OF 2)
	A10C	LINES AND SYMBOLS (SHEET 1 OF 3)
	A10D	LINES AND SYMBOLS (SHEET 2 OF 3)
	A10E	LINES AND SYMBOLS (SHEET 3 OF 3)
	A62C	LIMITS OF PAYMENT FOR EXCAVATION AND BACKFILL - BRIDGE
	B0-1	BRIDGE DETAILS
	B0-3	BRIDGE DETAILS
	B0-5	BRIDGE DETAILS
	B0-13	BRIDGE DETAILS
	B2-3	16" AND 24" CAST-IN-DRILLED-HOLE CONCRETE PILE
RSP	B3-1A	RETAINING WALL TYPE 1 (CASE 1)
RSP	B3-5	RETAINING WALL DETAILS NO. 1
	B6-21	JOINT SEALS (MAXIMUM MOVEMENT RATING = 2")
	B7-1	BOX GIRDER DETAILS
	B7-10	UTILITY OPENING - BOX GIRDER
	B8-5	CAST-IN-PLACE PRESTRESSED GIRDER DETAILS
	B11-57	CONCRETE BARRIER TYPE 742
	B14-3	COMMUNICATION AND SPRINKLER CONTROL CONDUITS (CONDUIT LESS THAN SIZE 4")

NOTE: FOR CALTRANS STANDARD PLANS, SEE SHEETS S4-21 TO S4-25.

PLAN SYMBOLS

A — SECTION IDENTIFICATION

STANDARD PLAN SHEET NO.

DETAIL NO.

AS-BUILT

COUNTY OF ORANGE CALIFORNIA

MARK	DESCRIPTION	DATE	APPR.

PREPARED UNDER THE RESPONSIBLE CHARGE OF:

REGISTERED PROFESSIONAL ENGINEER — QUOC TRONG NGUYEN — No.C71743 Exp.12/31/13 — CIVIL — STATE OF CALIFORNIA

Q. NGUYEN
RCE: C 71743 (EXP.12-31-13)

JULY 16, 2013
DATE

DESIGNED BY: QN
DRAWN BY: NL
CHECKED BY: GR
DRAWING CODE:
JOB NO. 11017
PLOT DATE: 09/01/2016
SCALE: AS SHOWN

COUNTY OF ORANGE
OC PUBLIC WORKS

TetraTech Engineers
10370 HEMET STREET, Suite 230
RIVERSIDE, CA 92503
Tel: (951) 687-1005

LA PATA AVENUE GAP CLOSURE
BRIDGE NO. 4

DECK CONTOURS

Sheet Reference Number

S4-2

263 OF 492

W:\11017 La Pata Ave Gap Closure\Construction Supports\As-builts\Bridge No. 4\20160831\S4-2 - Deck Contours.dwg, Layout: S4-2 - Deck Contours, Aug 23 2016 2:19pm

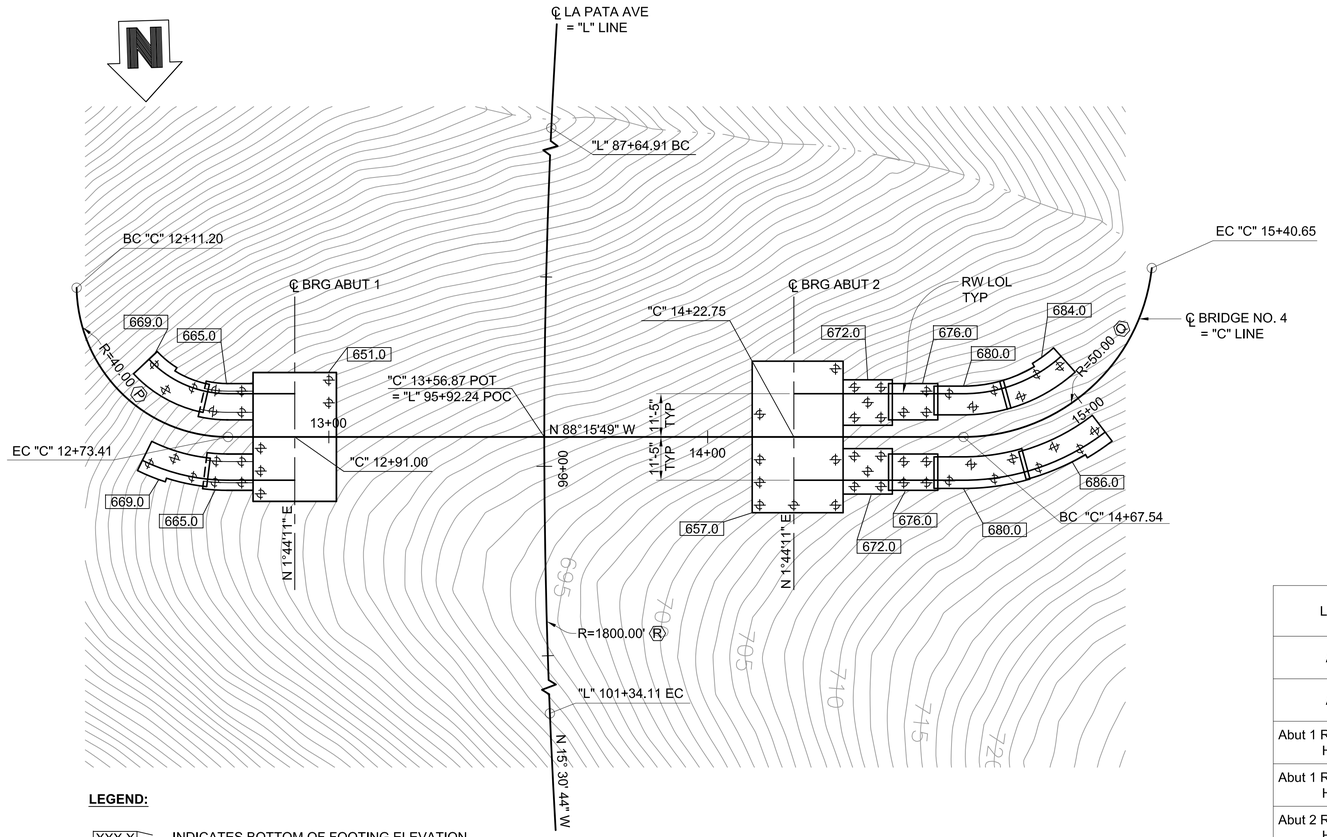

LEGEND:

XXX.X INDICATES BOTTOM OF FOOTING ELEVATION

PLAN
1" = 20'

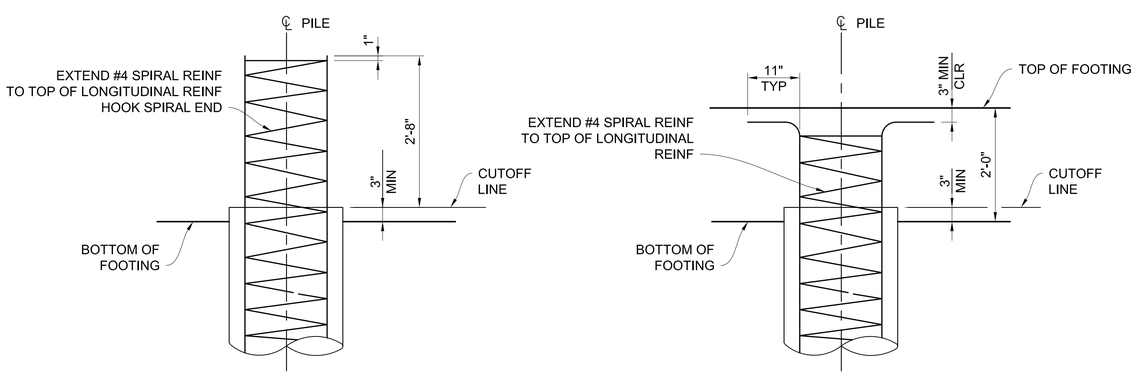

AT ABUTMENT FOOTING

AT RETAINING WALL FOOTING

NOTE: FOR INFORMATION NOT SHOWN, SEE B2-3

PILE HEAD DETAIL - 24" CIDH CONC PILE
3/4" = 1'-0"

BENCHMARK:

OCS BENCHMARK "AP-02-99"; DESCRIBED BY OCS 2003 - FOUND 3 3/4" OCS ALUMINUM BENCHMARK DISK STAMPED "AP-02-99" SET IN THE NORTHEASTERLY CORNER OF A CONCRETE BRIDGE DECK. MONUMENT IS LOCATED IN THE NORTHEASTERLY CORNER OF ANTONIO PARKWAY AND ITS OVERCROSSING OF SAN JUAN CREEK, 1 FT. SOUTHERLY OF THE NORTHERLY EDGE OF THE BRIDGE DECK AND 1 FT. WESTERLY OF THE EASTERLY GUARD RAIL MONUMENT IS SET LEVEL WITH THE BRIDGE DECK. O.C.S. 1995 ADJUSTMENT, LEVELED 2004. ELEVATION: 235.793 NGVD29
OCS BENCHMARK "3Y-38-91"; DESCRIBED BY OCS 2003 - FOUND 3 3/4" OCS ALUMINUM BENCHMARK DISK STAMPED "3Y-38-91", SET IN THE NORTHWESTERLY CORNER OF A 4 FT. BY 17 FT. CONCRETE CATCH BASIN. MONUMENT IS LOCATED IN THE SOUTHEASTERLY CORNER OF THE INTERSECTION OF AVENIDA PICO AND AVENIDA LA PATA, 50 FT. SOUTHERLY OF THE CENTERLINE OF AVENIDA LA PATA AND 90 FT. EASTERLY OF AVENIDA PICO. MONUMENT IS SET LEVEL WITH THE TOP OF THE CURB. O.C.S. 1995 ADJUSTMENT, LEVELED 2005. ELEVATION: 249.897 NGVD29

CURVE DATA TABLE

NO.	R	Δ	T	L
Ⓟ	40.00'	89°06'51"	39.39'	62.21'
Ⓠ	50.00'	83°46'57"	44.85'	73.11'
Ⓡ	1800.00'	43°34'59"	986.06'	1369.20'

NOTE:
FOR RW LOL CURVE DATA, SEE SHEETS S4-8 TO S4-10.

PILE DATA TABLE

Location	Pile Type	Nominal Resistance (kips)		Design Tip Elevation (ft)	Specified Tip Elevation (ft)
		Compression	Tension		
Abut 1	24" CIDH	370	0	624 (a)	624
Abut 2	24" CIDH	400	0	615 (a)	615
Abut 1 Retaining Walls H = 10'	24" CIDH	210	105	648 (a), 645 (d)	645
Abut 1 Retaining Walls H = 14'	24" CIDH	180	90	645 (a), 639 (d)	639
Abut 2 Retaining Walls H = 10'	24" CIDH	270	135	659 (a), 656 (d)	656
Abut 2 Retaining Walls H = 12'	24" CIDH	310	155	654 (a), 649 (d)	649
Abut 2 Retaining Walls H = 14'	24" CIDH	190	95	654 (a), 643 (d)	643
Abut 2 Retaining Walls H = 18'	24" CIDH	220	110	648 (a), 634 (d)	634

NOTES:

1. DESIGN TIP ELEVATION IS CONTROLLED BY: (a) COMPRESSION, (b) TENSION, (c) SETTLEMENT, (d) LATERAL LOADS.
2. THE CIDH SPECIFIED TIP ELEVATION SHALL NOT BE RAISED.

QUANTITIES:

STRUCTURE EXCAVATION (BRIDGE)	3,440 CY
STRUCTURE BACKFILL (BRIDGE)	1,870 CY
24" CAST-IN-DRILLED-HOLE CONCRETE PILING	2,800 LF
PRESTRESSING CAST-IN-PLACE CONCRETE	1 LS
STRUCTURAL CONCRETE (BRIDGE FOOTING)	435 CY
STRUCTURAL CONCRETE (BRIDGE)	840 CY
STRUCTURAL CONCRETE, APPROACH SLAB (TYPE N)	16 CY
JOINT SEAL (MR = 1")	46 LF
BAR REINFORCING STEEL (BRIDGE)	274,810 LB
PREPARE AND STAIN CONCRETE	14,780 SF
PICKET FENCE	477 LF
CONCRETE BARRIER (TYPE 742 MODIFIED)	505 LF

AS-BUILT

COUNTY OF ORANGE CALIFORNIA

MARK	DESCRIPTION	DATE	APPR.

PREPARED UNDER THE RESPONSIBLE CHARGE OF:
REGISTERED PROFESSIONAL ENGINEER QUOC TRONG NGUYEN No.C71743 Exp.12/31/13 CIVIL STATE OF CALIFORNIA
Q. NGUYEN
RCE: C 71743 (EXP.12-31-13)
JULY 16, 2013
DATE

DESIGNED BY: QN
DRAWN BY: NL
CHECKED BY: GR
DRAWING CODE:
JOB NO. 11017
PLOT DATE: 09/01/2016
SCALE: AS SHOWN

COUNTY OF ORANGE
OC PUBLIC WORKS

TEMA Engineers
10370 HEMET STREET, Suite 230
RIVERSIDE, CA 92503
Tel: (951) 687-1005

LA PATA AVENUE GAP CLOSURE
BRIDGE NO. 4

FOUNDATION PLAN

Sheet Reference Number
S4-3

W:\11017 La Pata Ave Gap Closure\Construction Supports\As-builts\Bridge No. 4\2016083\S4-3 - Foundation Plan.dwg, Layout: FP, Aug 23 2016 2:22pm

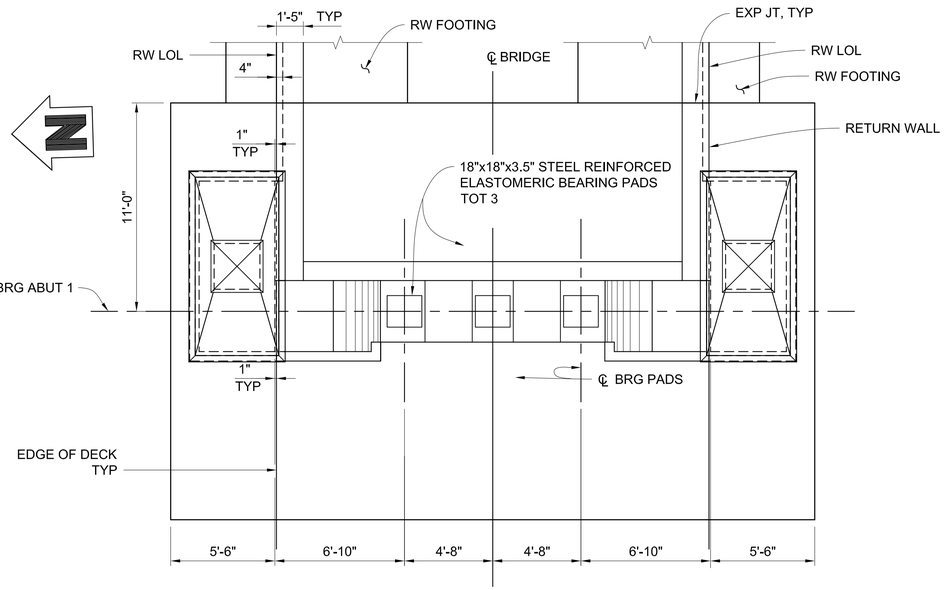

PLAN

1/4" = 1'-0"

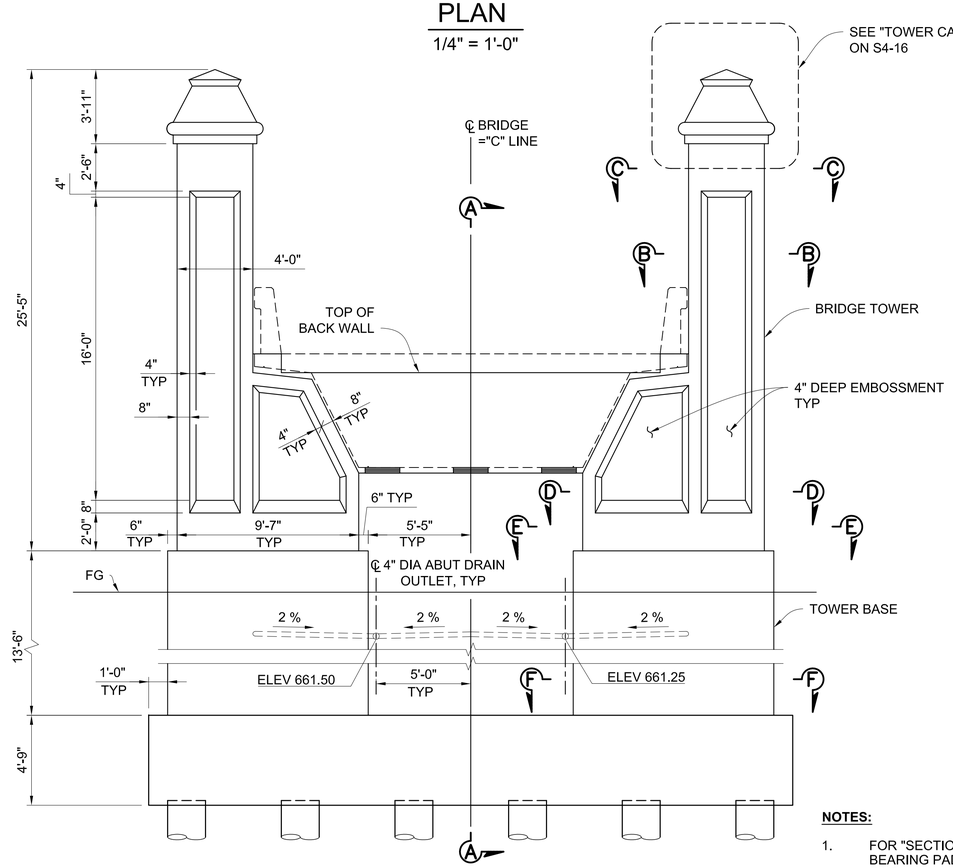

ABUTMENT 1 ELEVATION

1/4" = 1'-0"

NOTES:

1. FOR "SECTIONS B-B TO F-F" AND BEARING PAD DETAIL SEE SHEET S4-6 .
2. FOR "DETAIL 1", SEE SHEET S4-7.

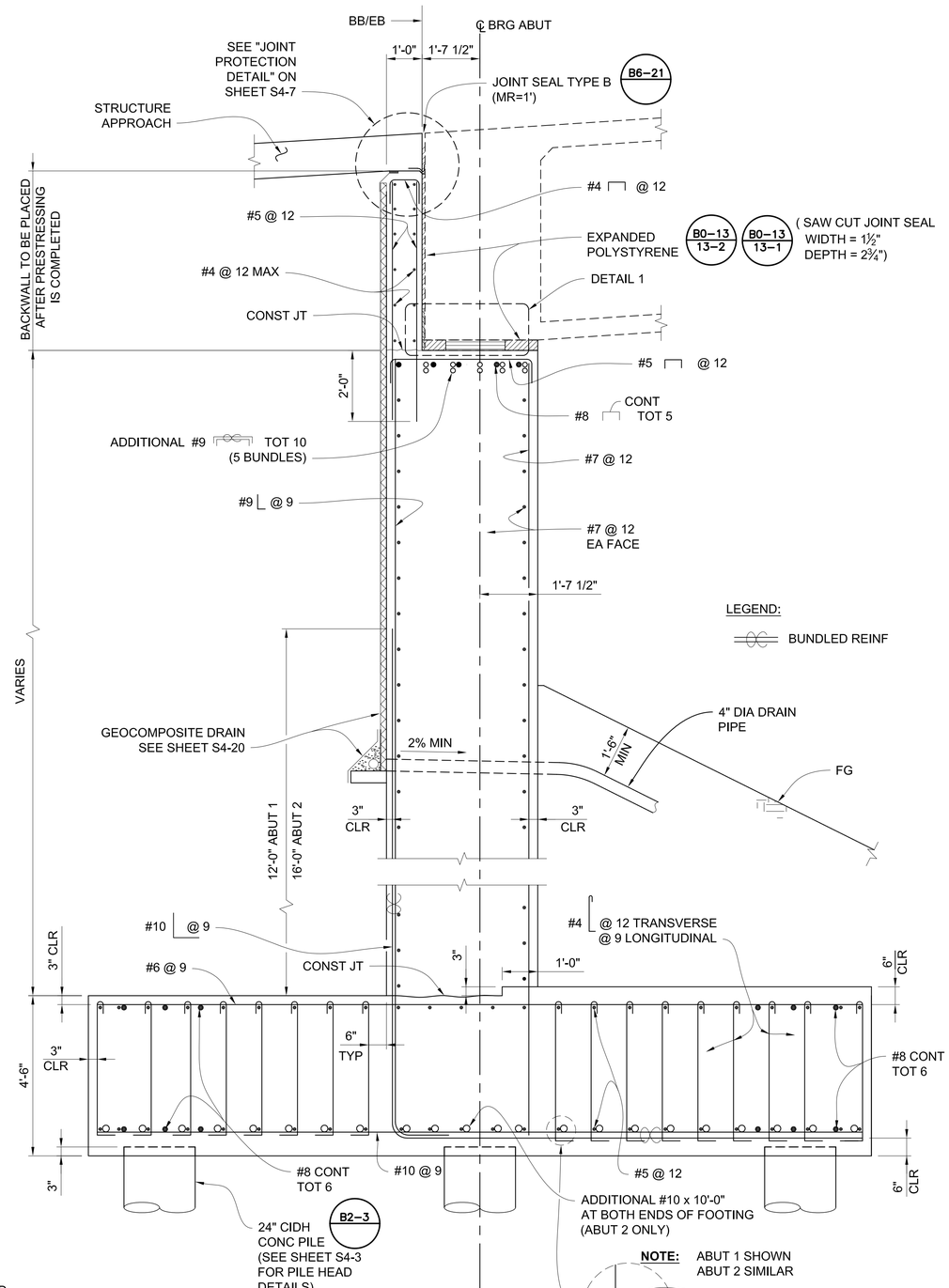

AS-BUILT

SECTION A-A

1/2" = 1'-0"

COUNTY OF ORANGE CALIFORNIA

MARK	DESCRIPTION	DATE	APPR.

PREPARED UNDER THE RESPONSIBLE CHARGE OF:

REGISTERED PROFESSIONAL ENGINEER QUOC TRONG NGUYEN No.C71743 Exp.12/31/13 CIVIL STATE OF CALIFORNIA

Q. NGUYEN
RCE: C 71743 (EXP.12-31-13)

JULY 16, 2013
DATE

DESIGNED BY: QN
CHECKED BY: GR
DRAWN BY: NIL
DRAWING CODE:
JOB NO. 11017
SCALE: AS SHOWN
PLOT DATE: 09/01/2016

COUNTY OF ORANGE
OC PUBLIC WORKS

TEAM Engineers
10370 HEMET STREET, Suite 230
RIVERSIDE, CA 92503
Tel: (951) 687-1005

LA PATA AVENUE GAP CLOSURE
BRIDGE NO. 4

ABUTMENT 1 LAYOUT

Sheet Reference Number

S4-4

W:\11017 La Pata Ave Gap Closure\Construction Support\As-builts\Bridge No. 4\20160831\S4-4_5 - Abutment Layout.dwg, Layout: Abutment 1 Layout, Aug 25 2016 9:54am

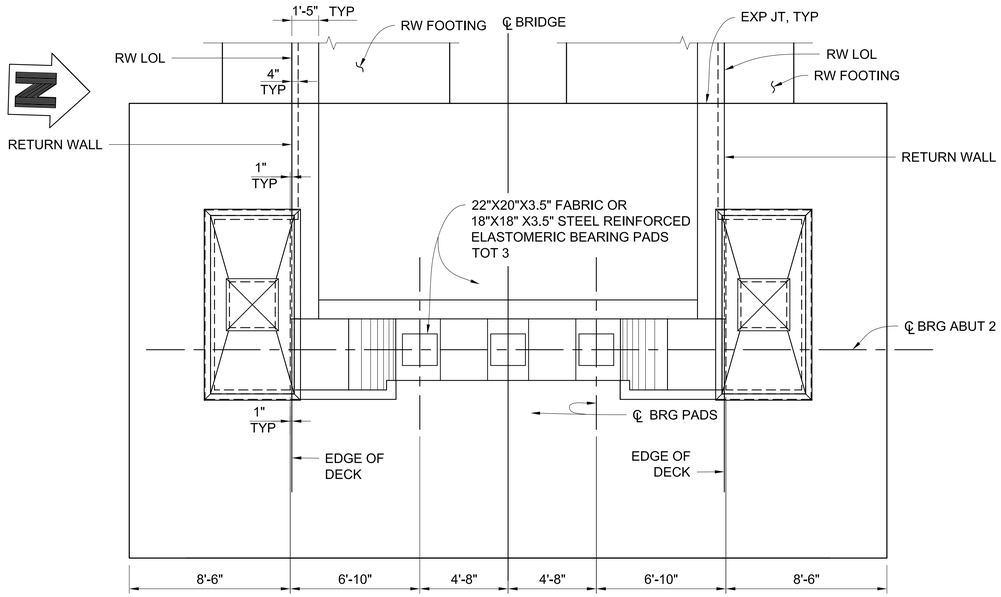

PLAN

1/4" = 1'-0"

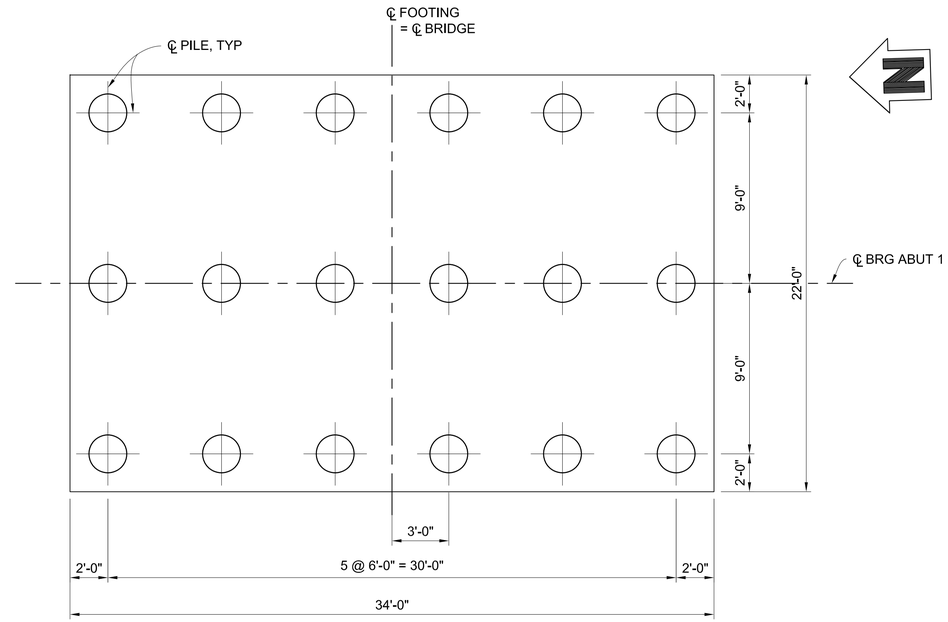

ABUTMENT 1 PILE LAYOUT

NO SCALE

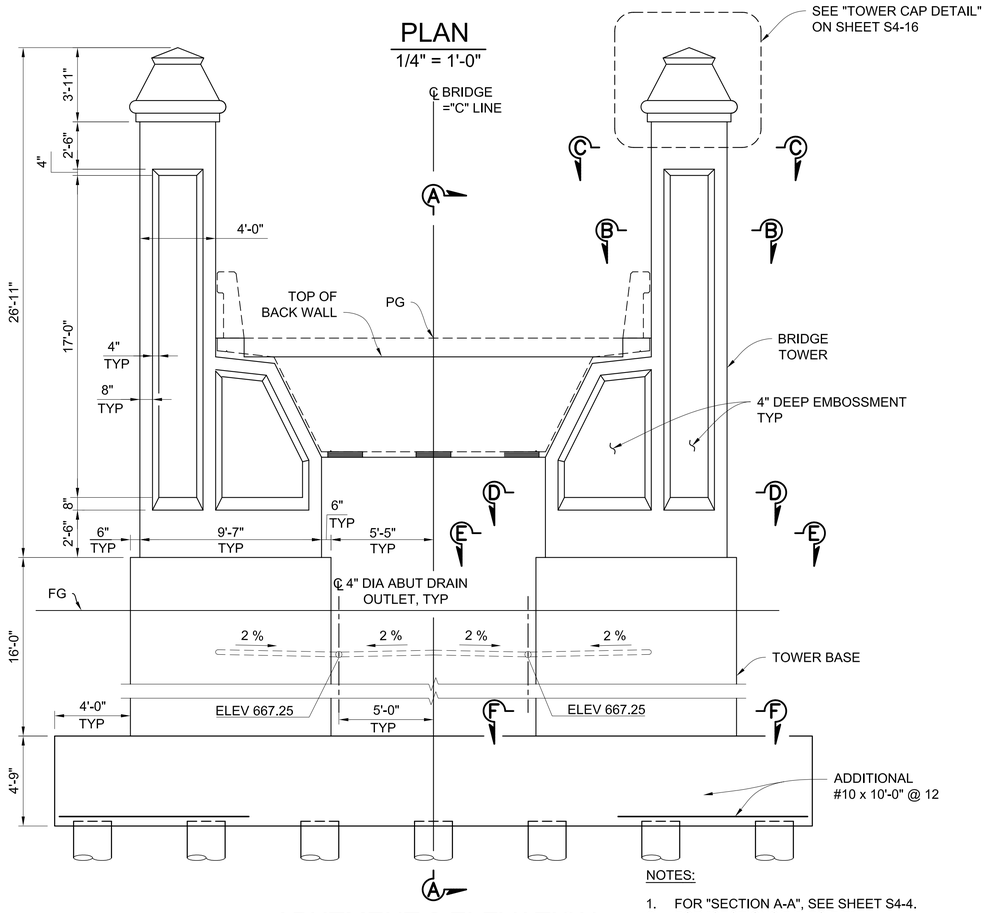

ABUTMENT 2 ELEVATION

1/4" = 1'-0"

NOTES:

1. FOR "SECTION A-A", SEE SHEET S4-4.
2. FOR "SECTIONS B-B TO F-F", SEE SHEET SHEET S4-6.
3. FOR SHEAR KEY DETAIL, SEE SHEET S4-7.

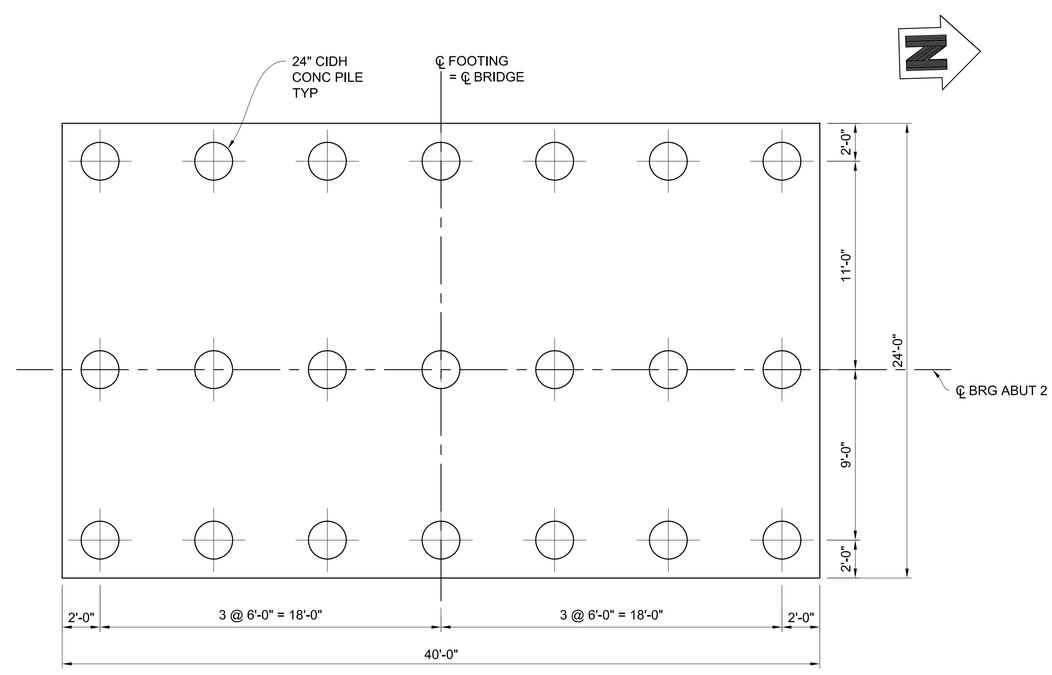

ABUTMENT 2 PILE LAYOUT

NO SCALE

AS-BUILT

COUNTY OF ORANGE CALIFORNIA

MARK	DESCRIPTION	DATE	APPR.

PREPARED UNDER THE RESPONSIBLE CHARGE OF:

REGISTERED PROFESSIONAL ENGINEER QUOC TRONG NGUYEN No.C71743 Exp.12/31/13 CIVIL STATE OF CALIFORNIA

Q. NGUYEN
RCE C 71743 (EXP.12-31-13)

JULY 16, 2013
DATE

DESIGNED BY: QN
DRAWN BY: NL
CHECKED BY: GR
DRAWING CODE:
JOB NO. 11017
PLOT DATE: 09/01/2016
SCALE: AS SHOWN

COUNTY OF ORANGE
OC PUBLIC WORKS

TEMET Engineers
10370 HEMET STREET, Suite 230
RIVERSIDE, CA 92503
Tel: (951) 687-1005

LA PATA AVENUE GAP CLOSURE
BRIDGE NO. 4

ABUTMENT 2
LAYOUT

Sheet Reference Number

S4-5

W:\11017 La Pata Ave Gap Closure\Construction Supports\As-builts\Bridge No. 4\20160831\S4-4_5 - Abutment Layout.dwg, Layout: Abutment 2 Layout, Aug 25 2016 9:54am

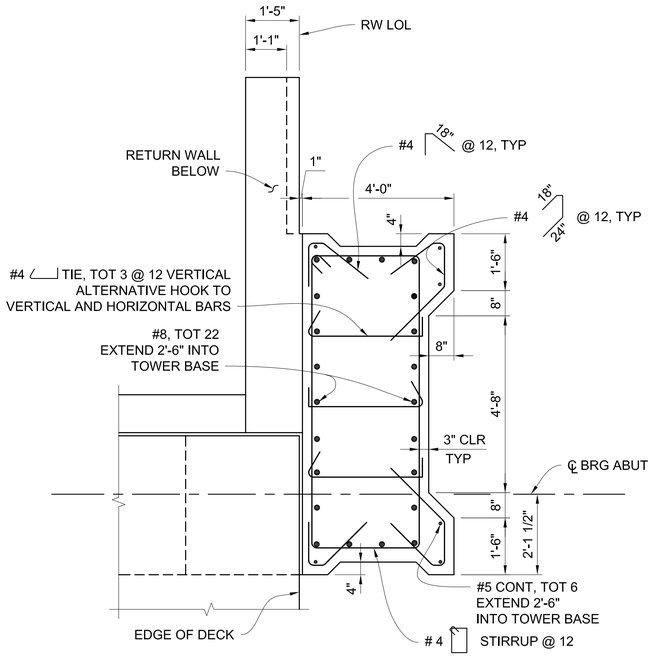

SECTION B-B
1/2" = 1'-0"

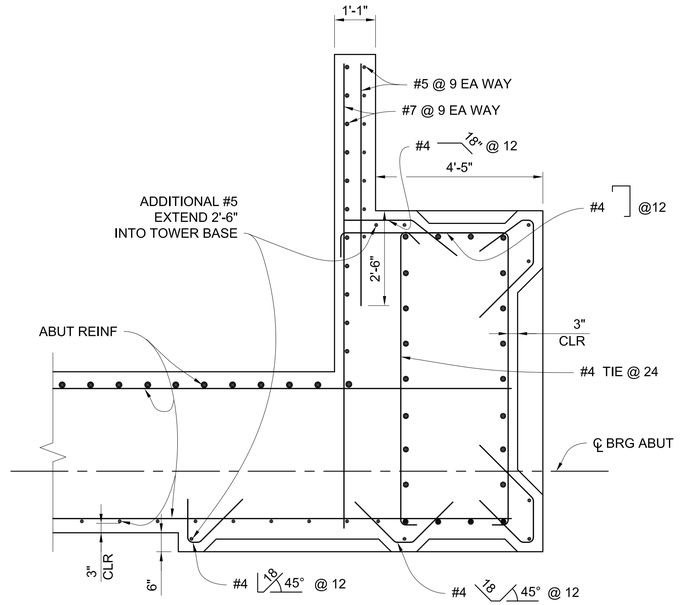

NOTE:
FOR INFORMATION NOT SHOWN, SEE SECTION B-B

SECTION D-D
1/2" = 1'-0"

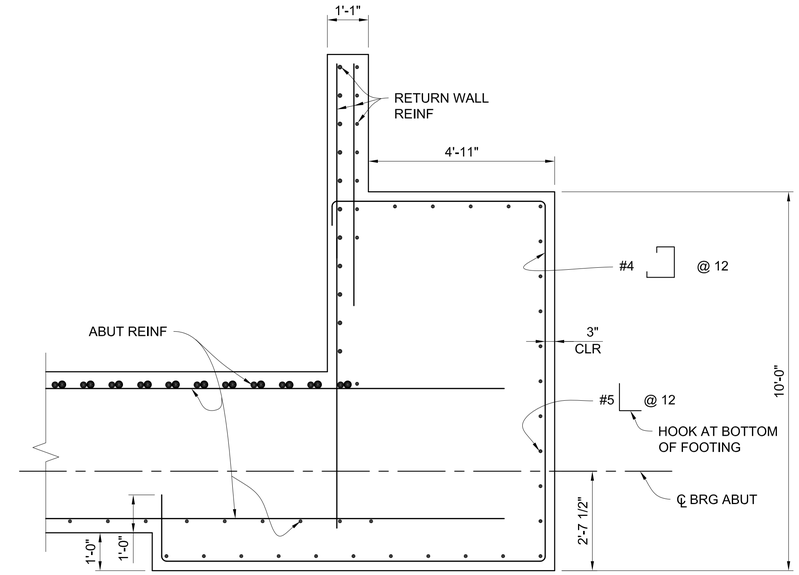

SECTION F-F
1/2" = 1'-0"

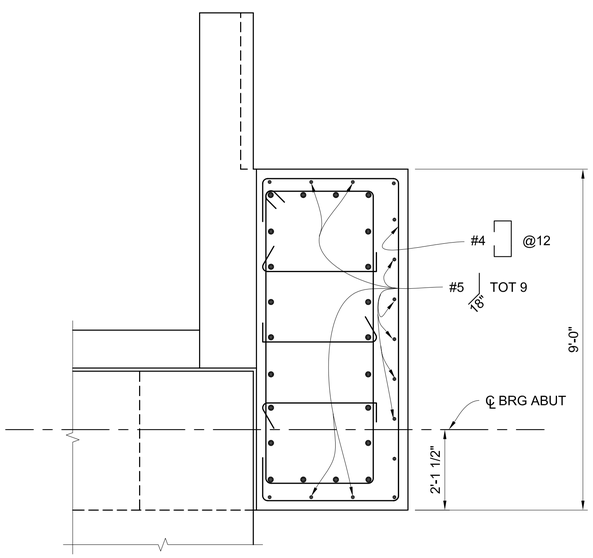

NOTE:
FOR INFORMATION NOT SHOWN, SEE SECTION B-B.

SECTION C-C
1/2" = 1'-0"

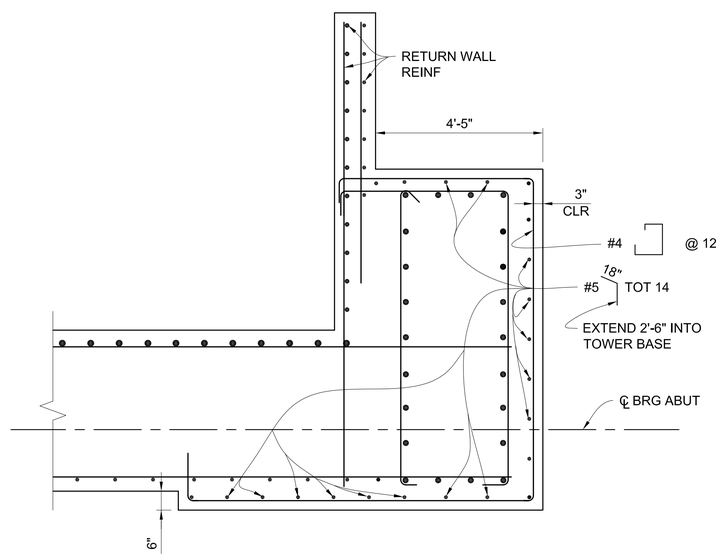

NOTE:
FOR INFORMATION NOT SHOWN, SEE SECTION D-D.

SECTION E-E
1/2" = 1'-0"

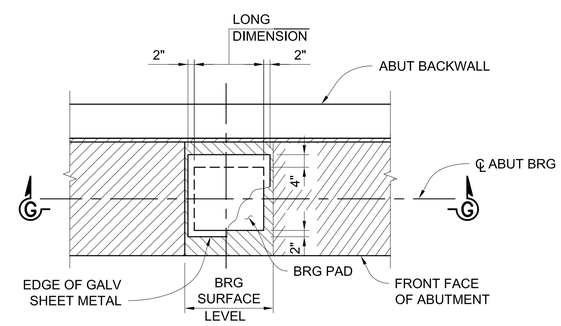

BEARING PAD DETAIL
NO SCALE

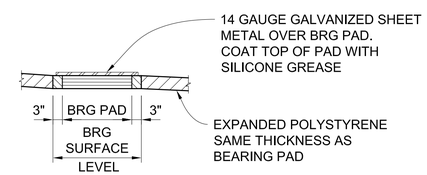

SECTION G-G
NO SCALE

NOTE: FOR LOCATIONS OF "SECTIONS B-B, C-C, D-D, E-E AND F-F" SEE SHEET S4-5 AND S4-6.

AS-BUILT

COUNTY OF ORANGE CALIFORNIA

MARK	DESCRIPTION	DATE	APPR.

PREPARED UNDER THE RESPONSIBLE CHARGE OF:
REGISTERED PROFESSIONAL ENGINEER QUOC TRONG NGUYEN No.C71743 Exp.12/31/13 CIVIL STATE OF CALIFORNIA
Q. NGUYEN
RCE C 71743 (EXP.12-31-13)
JULY 16, 2013
DATE

DESIGNED BY: QN
CHECKED BY: GR
DRAWN BY: NL
DRAWING CODE:
JOB NO. 11017
PLOT DATE: 09/01/2016
SCALE: AS SHOWN

COUNTY OF ORANGE
OC PUBLIC WORKS

TENI Engineers
10270 HEMET STREET, Suite 230
RIVERSIDE, CA 92503
Tel: (951) 687-1005

LA PATA AVENUE GAP CLOSURE
BRIDGE NO. 4

ABUTMENT
DETAIL NO. 1

Sheet Reference Number
S4-6

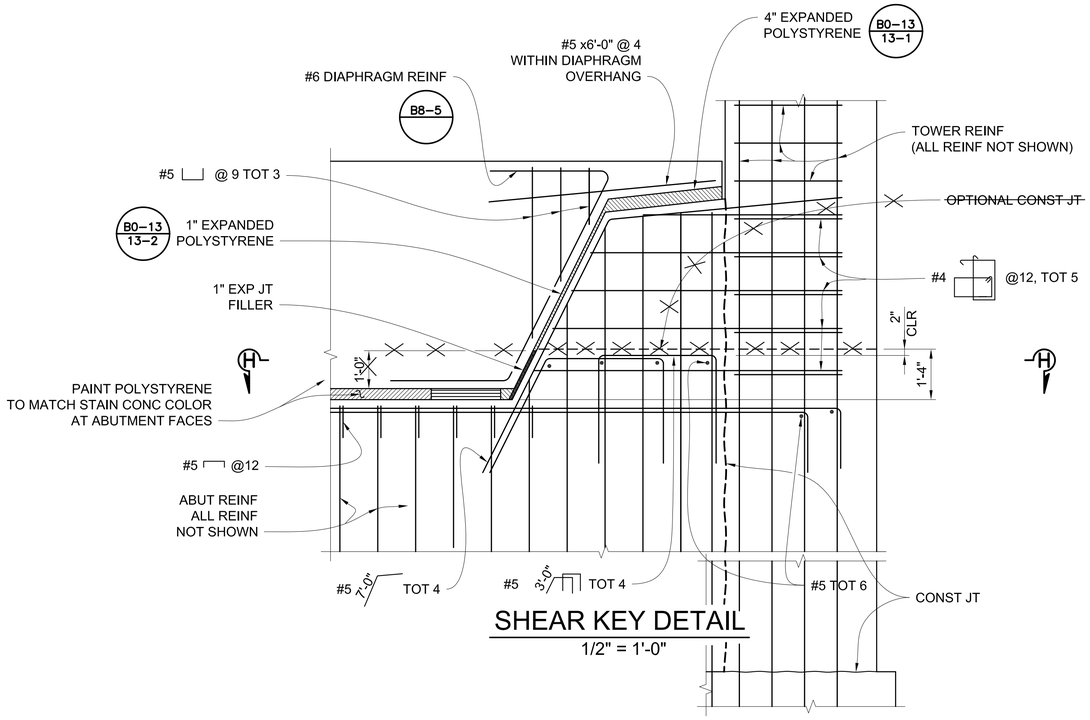

SHEAR KEY DETAIL

1/2" = 1'-0"

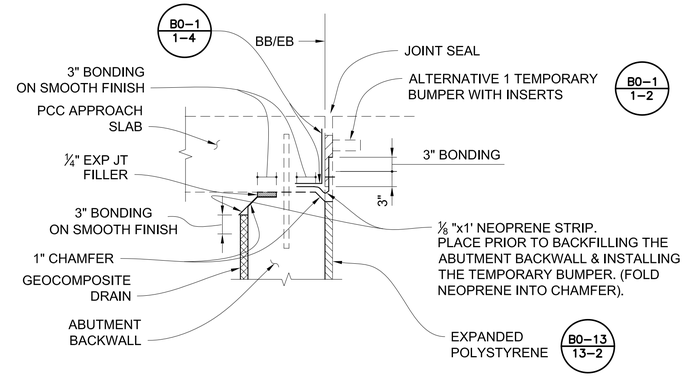

JOINT PROTECTION DETAIL

NO SCALE

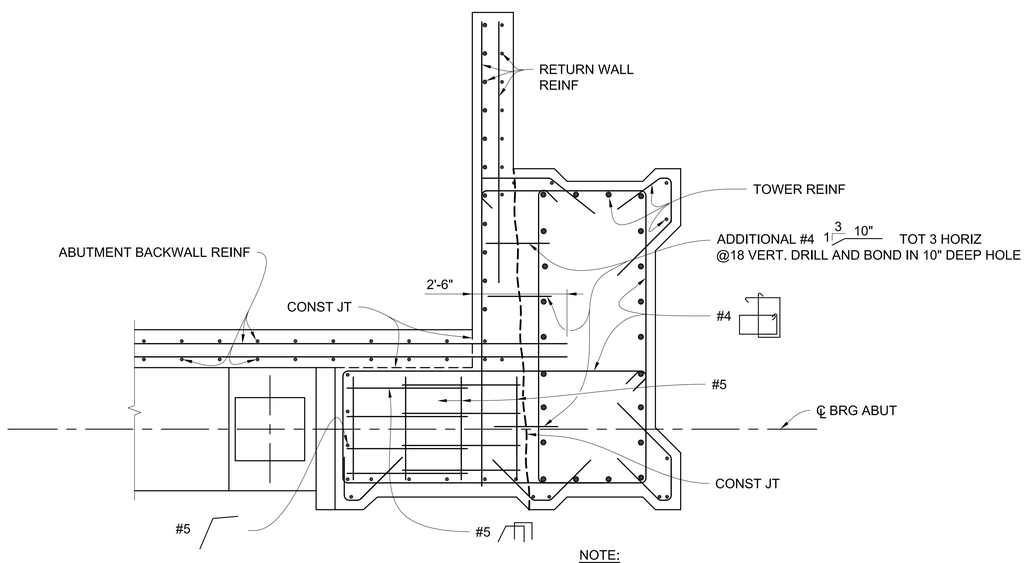

NOTE:
FOR INFORMATION NOT SHOWN, SEE SECTION B-B AND D-D ON SHEET S4-6.

SECTION H-H

1/2" = 1'-0"

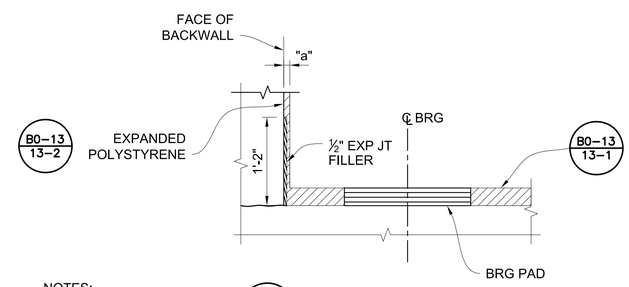

NOTES:

1. FOR DIMENSION "a", SEE B6-21
2. FOR "DETAIL 1" LOCATION, SEE SHEET ON S4-4.

DETAIL 1

NO SCALE

AS-BUILT

COUNTY OF ORANGE CALIFORNIA

MARK	DESCRIPTION	DATE	APPR.

PREPARED UNDER THE RESPONSIBLE CHARGE OF:

QUOC TRONG NGUYEN REGISTERED PROFESSIONAL ENGINEER No.C71743 Exp.12/31/13 CIVIL STATE OF CALIFORNIA

Q. NGUYEN
RCE C 71743 (EXP.12-31-13)

JULY 16, 2013
DATE

DESIGNED BY: QN
CHECKED BY: GR
DRAWN BY: NL
DRAWING CODE:
JOB NO. 11017
PLOT DATE: 09/01/2016
SCALE: AS SHOWN

COUNTY OF ORANGE
OC PUBLIC WORKS

TENI Engineers
10370 HEMET STREET, Suite 230
RIVERSIDE, CA 92503
Tel: (951) 687-1005

LA PATA AVENUE GAP CLOSURE
BRIDGE NO. 4

ABUTMENT DETAILS NO. 2

Sheet Reference Number

S4-7

W:\11017 La Pata Ave Gap Closure\Construction Supports\As-builts\Bridge No. 4\20160831\S4-6_7 - Abutment Details.DWG, Layout: Abutment Details No. 2, Aug 25 2016 9:36am

NOTE: FOR "SECTIONS K-K, L-L, M-M, AND N-N", SEE SHEET S4-11.

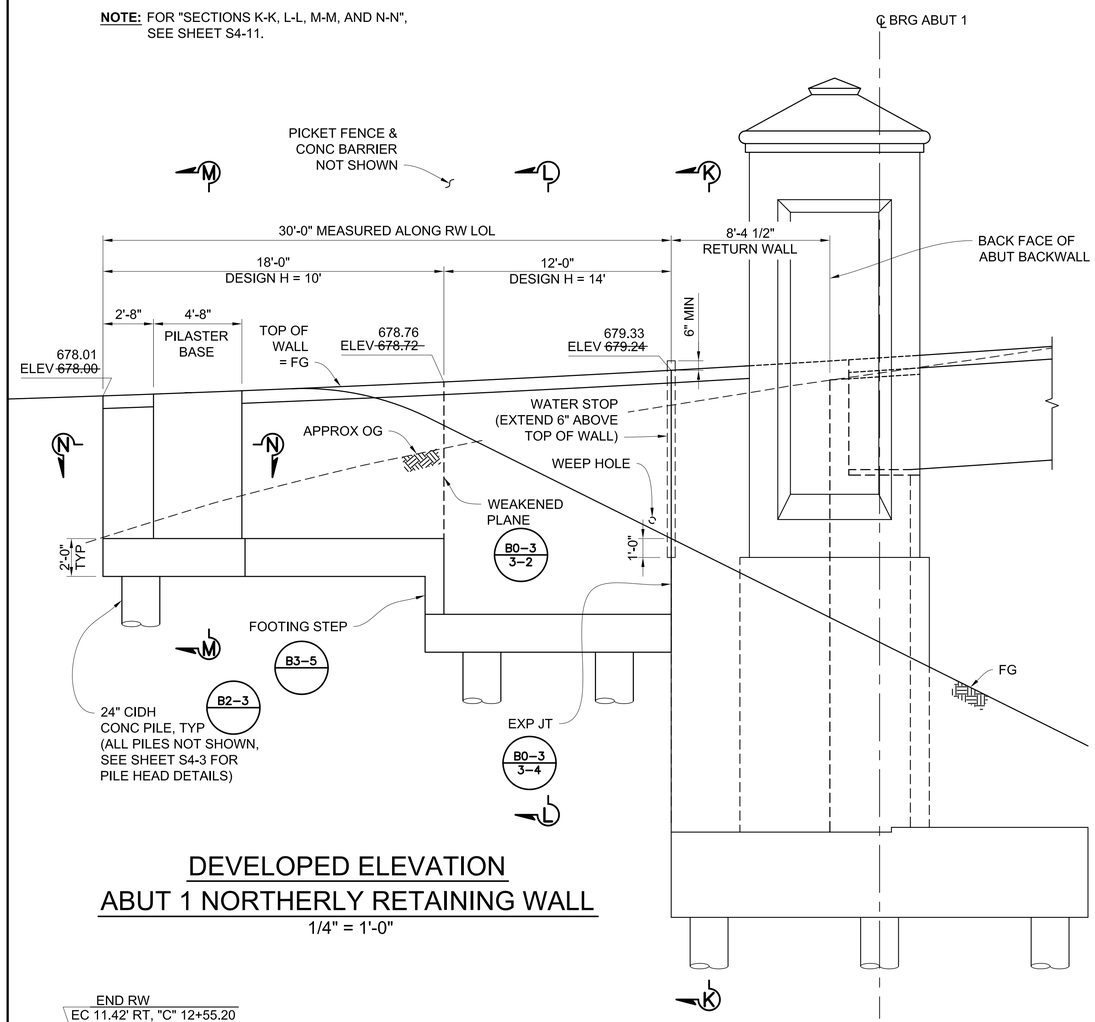

DEVELOPED ELEVATION
ABUT 1 NORTHERLY RETAINING WALL
1/4" = 1'-0"

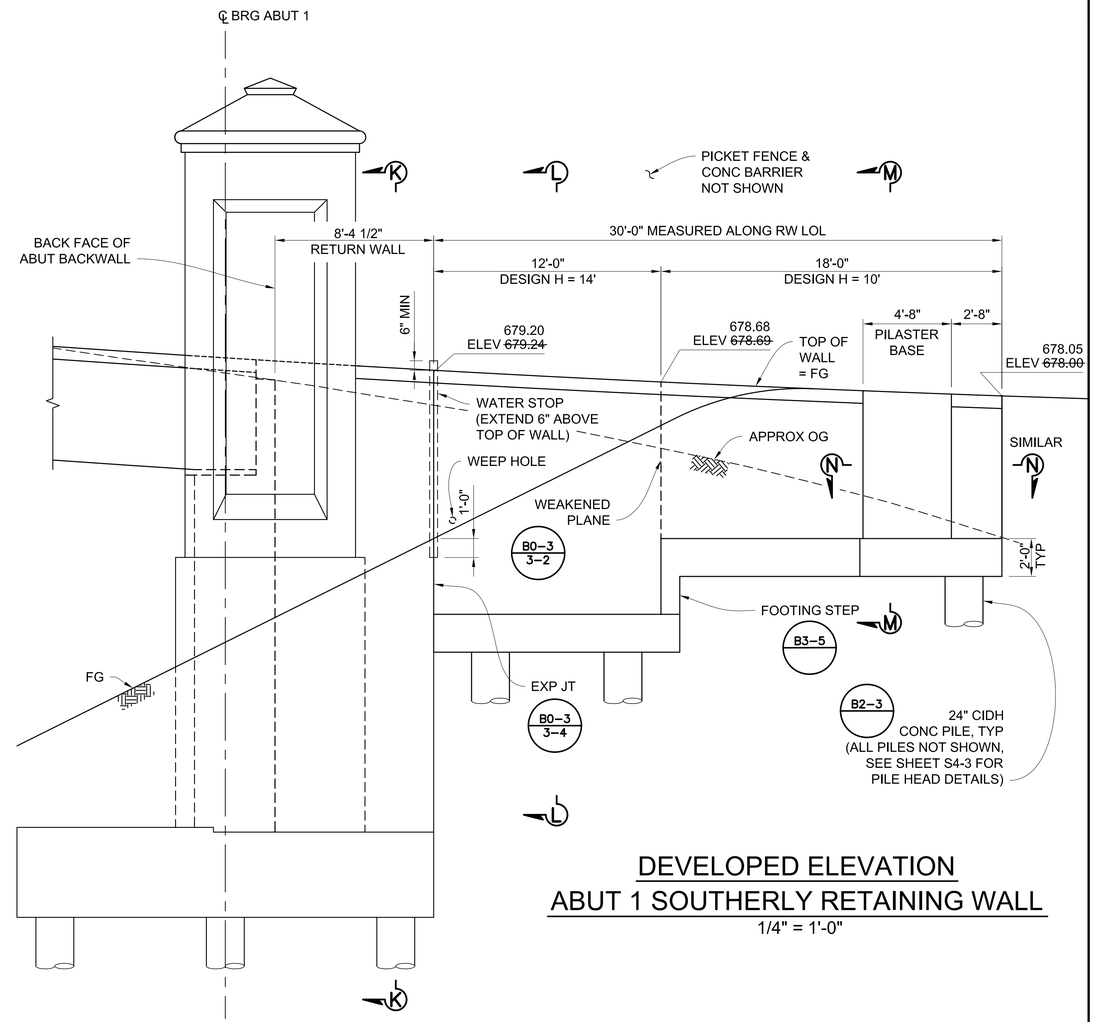

DEVELOPED ELEVATION
ABUT 1 SOUTHERLY RETAINING WALL
1/4" = 1'-0"

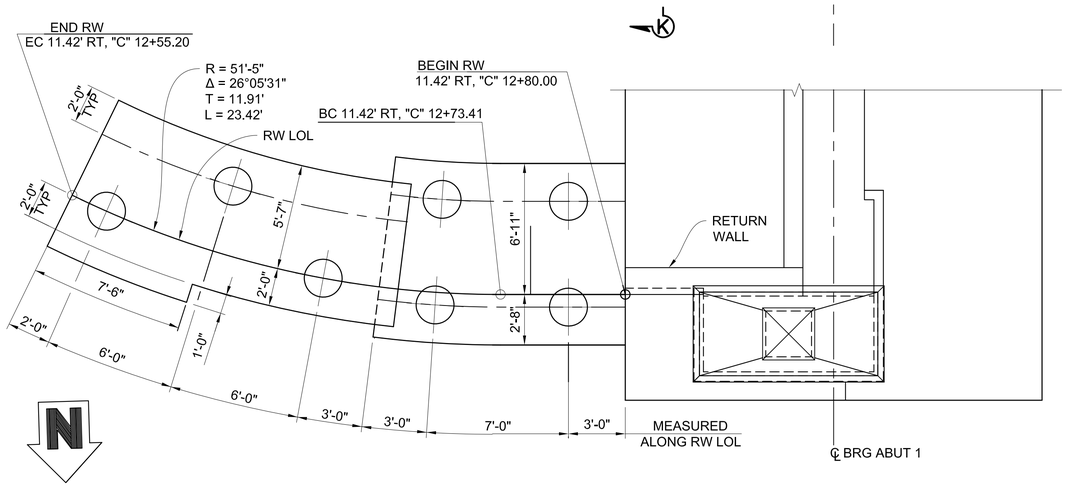

ABUT 1 NORTHERLY RETAINING WALL PLAN
1/4" = 1'-0"

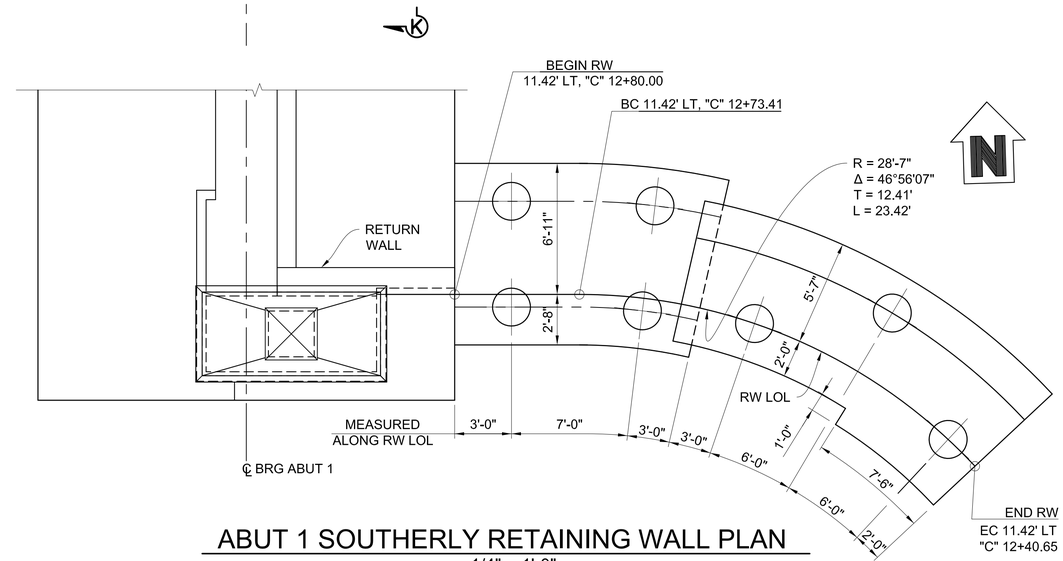

ABUT 1 SOUTHERLY RETAINING WALL PLAN
1/4" = 1'-0"

AS-BUILT

COUNTY OF ORANGE CALIFORNIA

MARK	DESCRIPTION	DATE	APPR.

PREPARED UNDER THE RESPONSIBLE CHARGE OF:
REGISTERED PROFESSIONAL ENGINEER — QUOC TRONG NGUYEN — No.C71743 Exp.12/31/13 — CIVIL — STATE OF CALIFORNIA
Q. NGUYEN
RCE C 71743 (EXP.12-31-13)
JULY 16, 2013
DATE

DESIGNED BY: QN
DRAWN BY: NL
CHECKED BY: GR
DRAWING CODE:
JOB NO. 11017
PLOT DATE: 09/01/2016
SCALE: AS SHOWN

COUNTY OF ORANGE
OC PUBLIC WORKS

TRC Engineers
10370 HEMET STREET, Suite 230
RIVERSIDE, CA 92503
Tel: (951) 687-1005

LA PATA AVENUE GAP CLOSURE
BRIDGE NO. 4

ABUTMENT DETAILS NO. 3

Sheet Reference Number
S4-8

W:\11017 La Pata Ave Gap Closure\Construction Supports\As-builts\Bridge No. 4\20160831\S4-8_11 - Retaining Walls.dwg, Layout: Abut 1 RW, Aug 24 2016 3:27pm

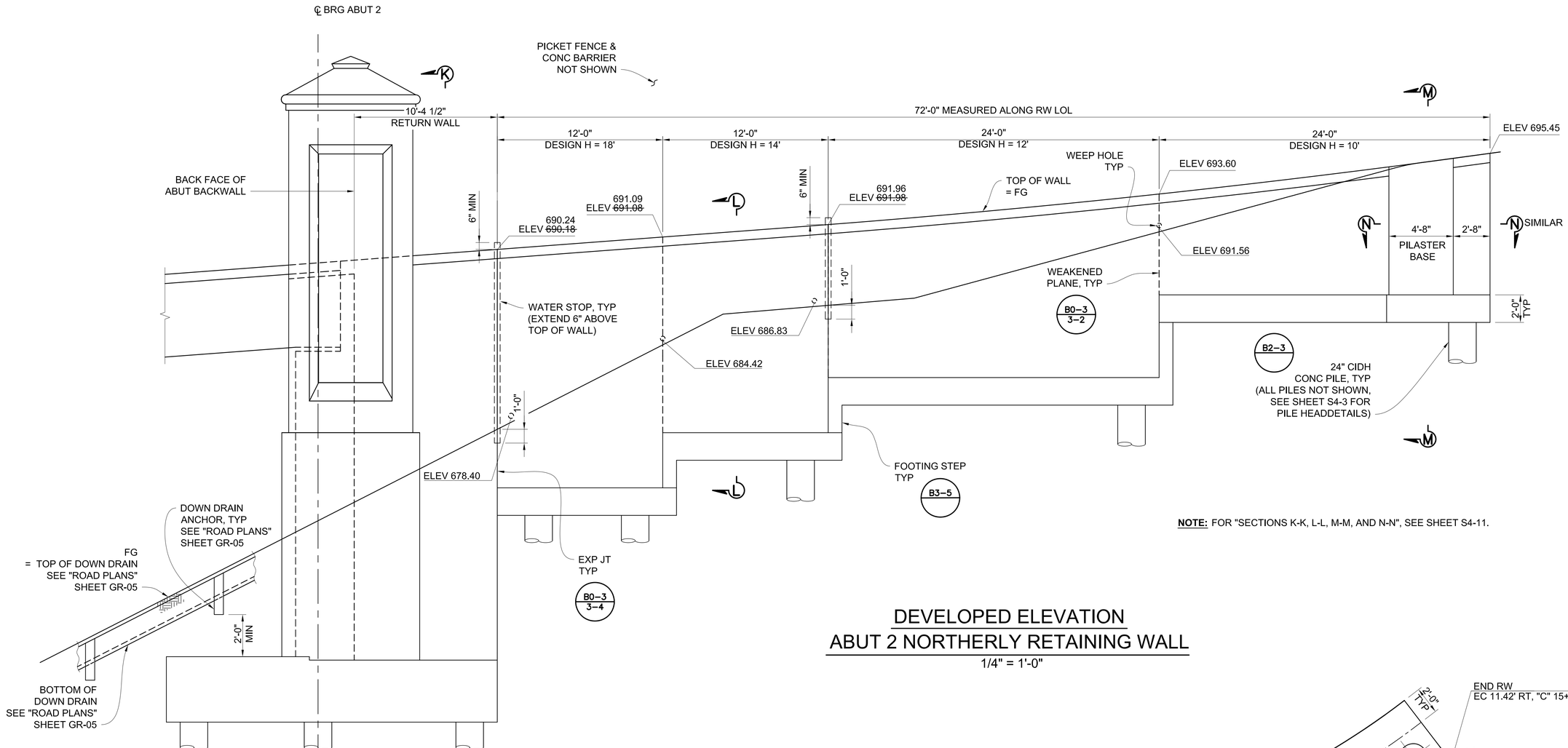

NOTE: FOR "SECTIONS K-K, L-L, M-M, AND N-N", SEE SHEET S4-11.

DEVELOPED ELEVATION
ABUT 2 NORTHERLY RETAINING WALL
1/4" = 1'-0"

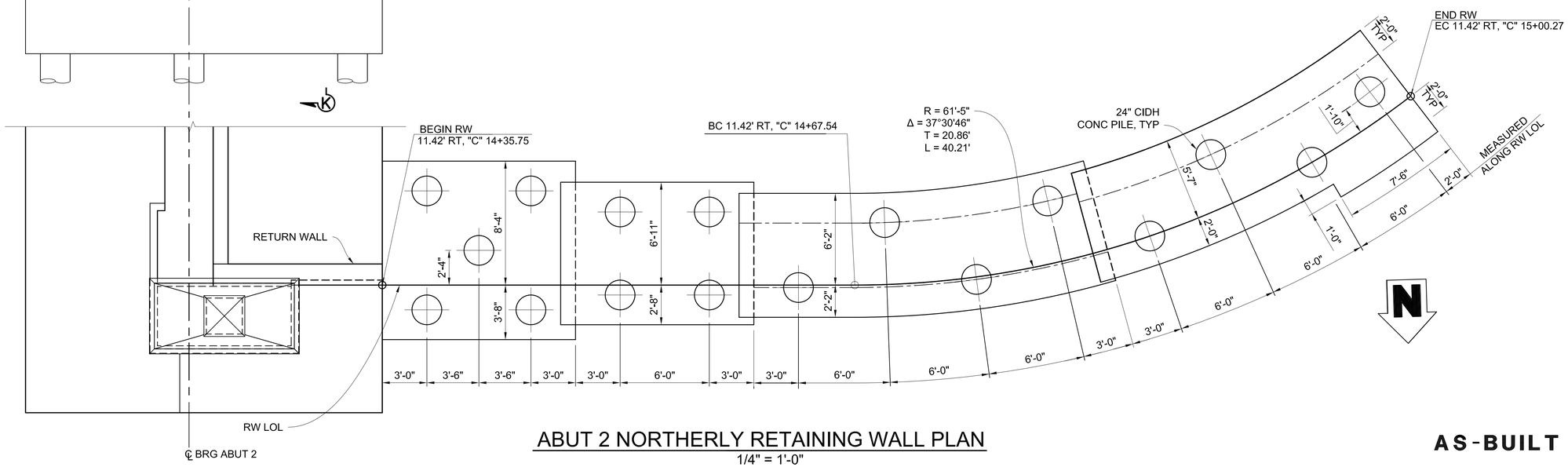

ABUT 2 NORTHERLY RETAINING WALL PLAN
1/4" = 1'-0"

AS-BUILT

COUNTY OF ORANGE CALIFORNIA

MARK	DESCRIPTION	DATE	APPR.

PREPARED UNDER THE RESPONSIBLE CHARGE OF:

REGISTERED PROFESSIONAL ENGINEER QUOC TRONG NGUYEN No.C71743 Exp.12/31/13 CIVIL STATE OF CALIFORNIA

Q. NGUYEN
RCE: C 71743 (EXP.12-31-13)

JULY 16, 2013
DATE

DESIGNED BY: QN
CHECKED BY: GR
DRAWN BY: NL
DRAWING CODE:
JOB NO. 11017
SCALE: AS SHOWN
PLOT DATE: 09/01/2016

COUNTY OF ORANGE
OC PUBLIC WORKS

TeNi Engineering
10370 HEMET STREET, Suite 230
RIVERSIDE, CA 92503
Tel: (951) 687-7005

LA PATA AVENUE GAP CLOSURE
BRIDGE NO. 4

ABUTMENT DETAILS NO. 4

Sheet Reference Number

S4-9

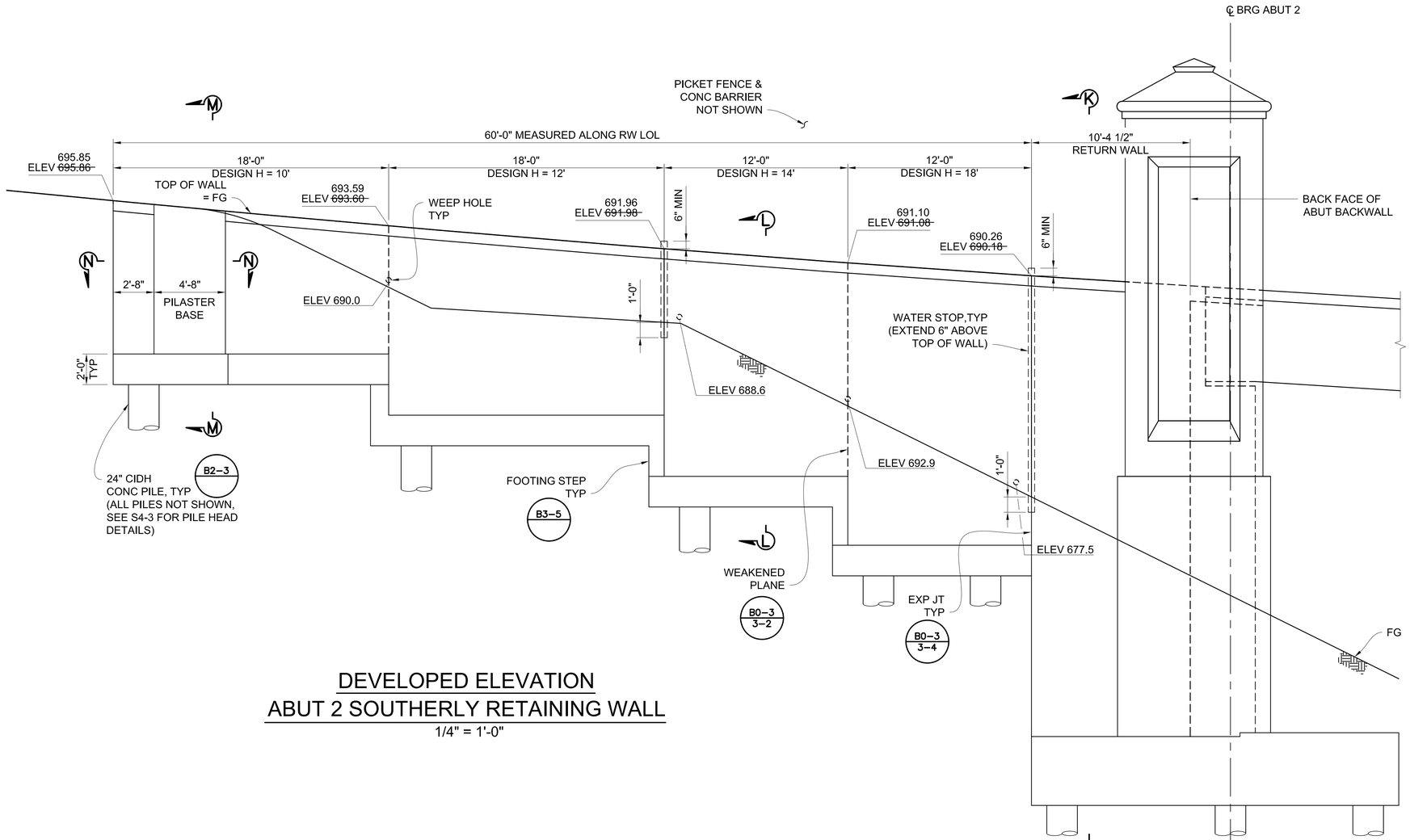

NOTE: FOR "SECTIONS K-K, L-L, M-M, AND N-N", SEE SHEET S4-11.

DEVELOPED ELEVATION
ABUT 2 SOUTHERLY RETAINING WALL
1/4" = 1'-0"

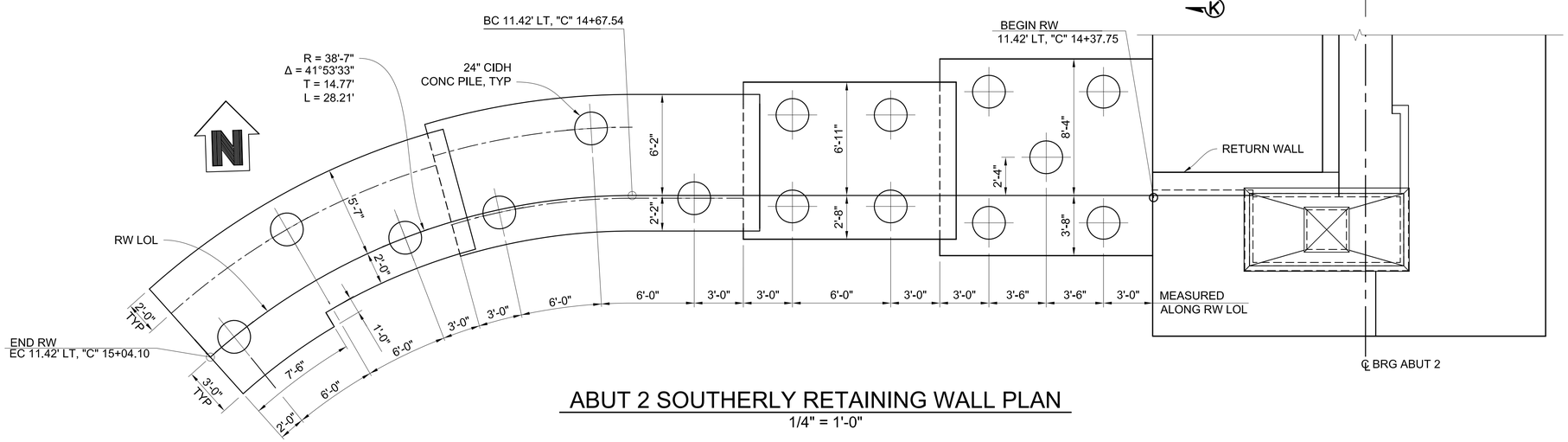

ABUT 2 SOUTHERLY RETAINING WALL PLAN
1/4" = 1'-0"

AS-BUILT

COUNTY OF ORANGE CALIFORNIA

MARK	DESCRIPTION	DATE	APPR.

PREPARED UNDER THE RESPONSIBLE CHARGE OF:

REGISTERED PROFESSIONAL ENGINEER QUOC TRONG NGUYEN No.C71743 Exp.12/31/13 CIVIL STATE OF CALIFORNIA

Q. NGUYEN
RCE C 71743 (EXP.12-31-13)

JULY 16, 2013
DATE

DESIGNED BY: QN
DRAWN BY: NL
CHECKED BY: GR
DRAWING CODE:
JOB NO. 11017
PLOT DATE: 09/01/2016
SCALE: AS SHOWN

COUNTY OF ORANGE
OC PUBLIC WORKS

TRANSTECH Engineers, Inc.
10370 HEMET STREET, Suite 230
RIVERSIDE, CA 92503
Tel: (951) 687-1005

LA PATA AVENUE GAP CLOSURE
BRIDGE NO. 4

ABUTMENT DETAILS NO. 5

Sheet Reference Number

S4-10

W:\11017 La Pata Ave Gap Closure\Construction Supports\As-builts\Bridge No. 4\20160831\S4-8_11 - Retaining Walls.dwg, Layout: Abut 2 S RW, Aug 24 2016 3:27pm

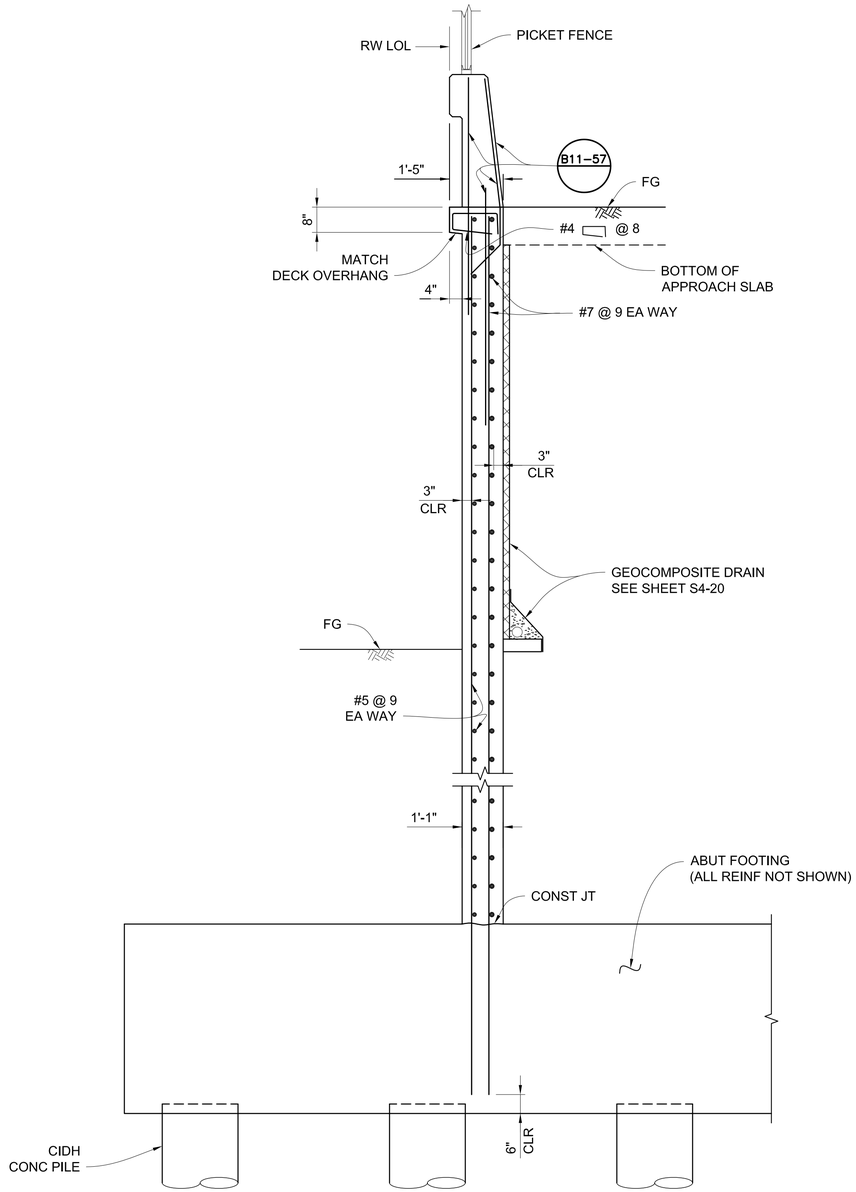

SECTION K-K
1/2" = 1'-0"

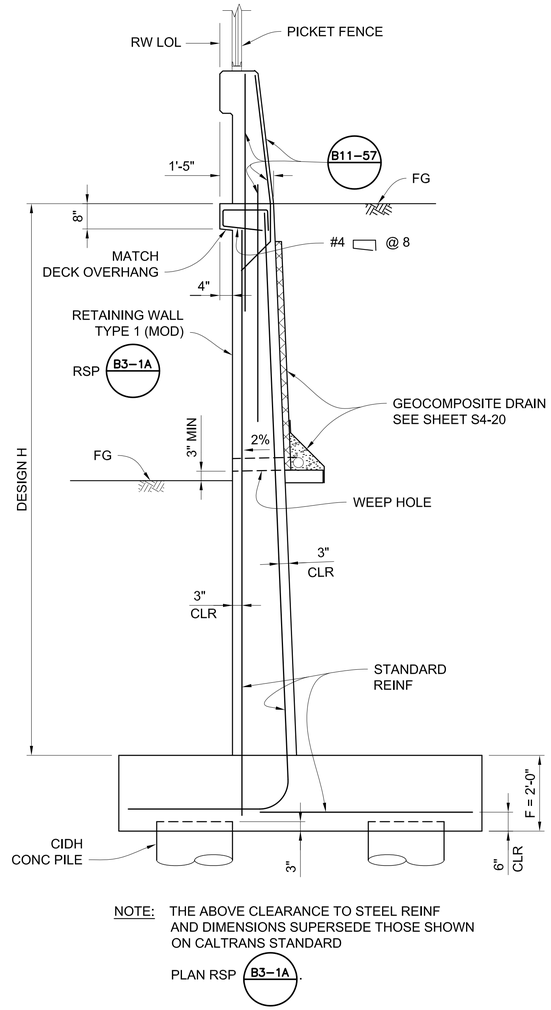

NOTE: THE ABOVE CLEARANCE TO STEEL REINF AND DIMENSIONS SUPERSEDE THOSE SHOWN ON CALTRANS STANDARD PLAN RSP B3-1A.

SECTION L-L
RETAINING WALL TYPICAL SECTION
1/2" = 1'-0"

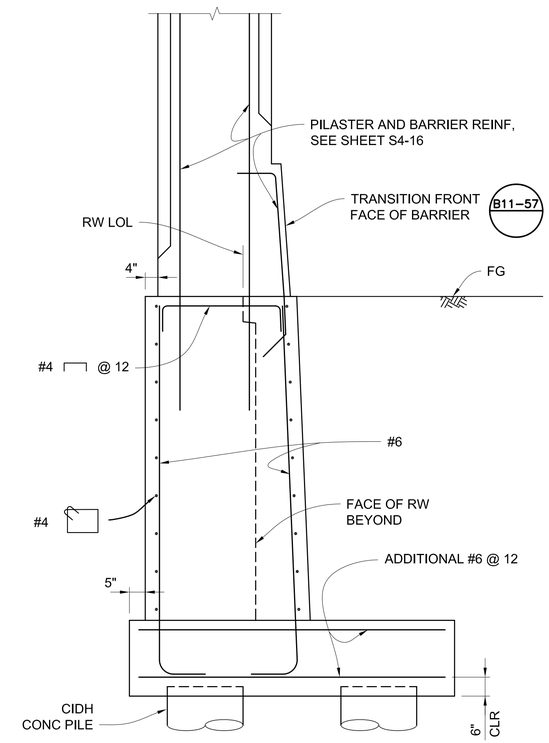

NOTE: ALL RW REINF NOT SHOWN.

SECTION M-M
1/2" = 1'-0"

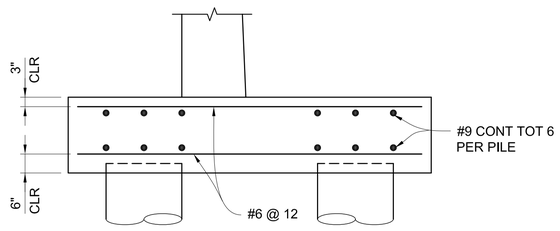

ADDITIONAL FOOTING REINFORCEMENT
1/2" = 1'-0"

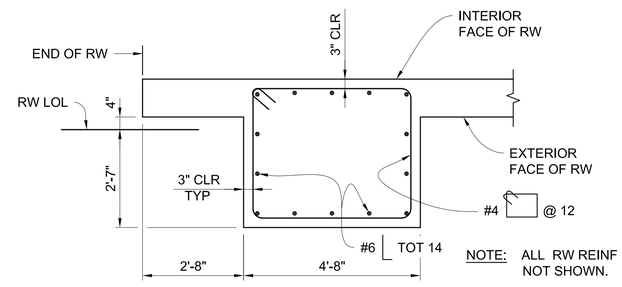

NOTE: ALL RW REINF NOT SHOWN.

SECTION N-N
1/2" = 1'-0"

AS-BUILT

NOTE: FOR LOCATIONS OF "SECTIONS K-K, L-L, M-M AND N-N", SEE SHEETS S4-8 TO S4-10.

COUNTY OF ORANGE CALIFORNIA

MARK	DESCRIPTION	DATE	APPR.

REGISTERED PROFESSIONAL ENGINEER QUOC TRONG NGUYEN No.C71743 Exp.12/31/13 CIVIL STATE OF CALIFORNIA

PREPARED UNDER THE RESPONSIBLE CHARGE OF:
Q. NGUYEN
RCE C 71743 (EXP.12-31-13)
JULY 16, 2013
DATE

DESIGNED BY: QN
CHECKED BY: GR
DRAWN BY: NL
DRAWING CODE:
JOB NO. 11017
PLOT DATE: 09/01/2016
SCALE: AS SHOWN

COUNTY OF ORANGE
OC PUBLIC WORKS

TENG Engineers
10370 HEMET STREET, Suite 230
RIVERSIDE, CA 92503
Tel: (951) 687-1005

LA PATA AVENUE GAP CLOSURE
BRIDGE NO. 4

ABUTMENT
DETAILS NO. 6

Sheet Reference Number

S4-11

W:\11017 La Pata Ave Gap Closure\Construction Supports\As-builts\Bridge No. 4\20160831\S4-8_11 - Retaining Walls.dwg, Layout: RW DETAILS, Aug 24, 2016 3:27pm

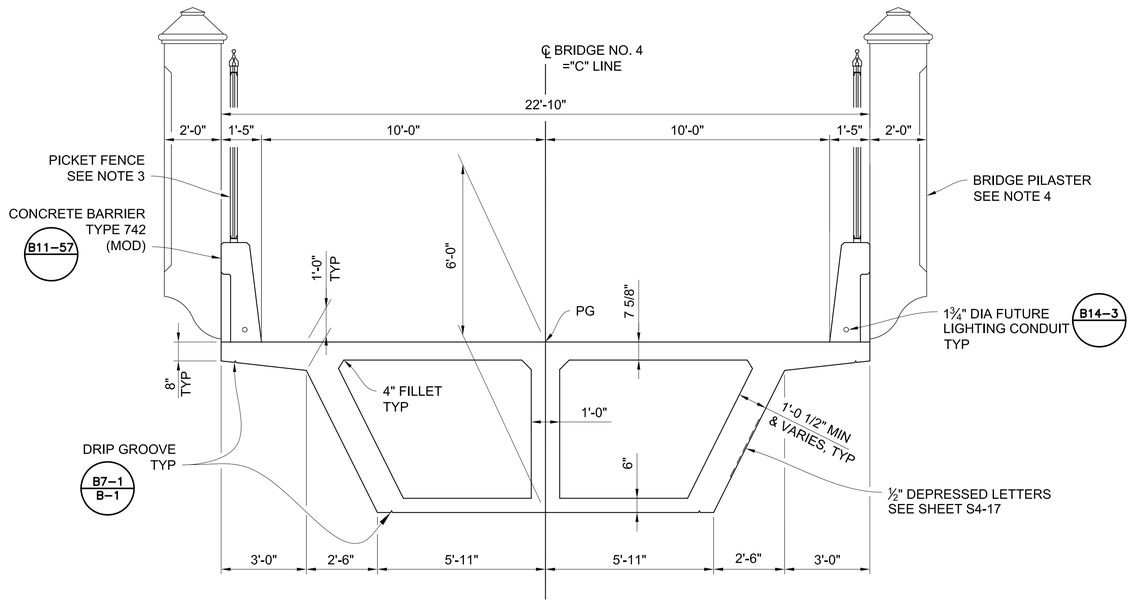

TYPICAL SECTION

3/8" = 1'-0"

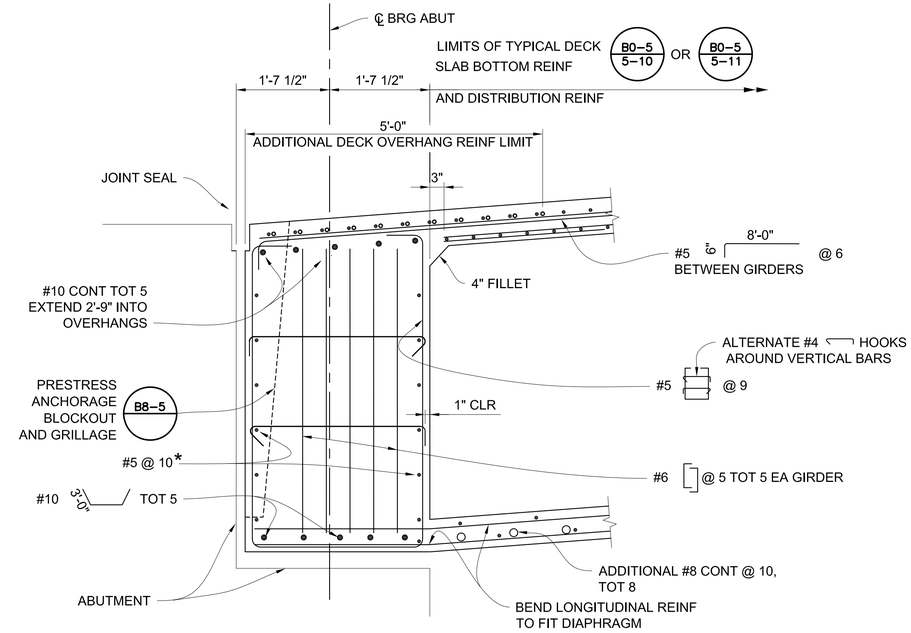

NOTE:

* BARS MAY BE SPLICED OR BENT TO CLEAR PRESTRESS ANCHORAGE AS DIRECTED BY THE ENGINEER.

END DIAPHRAGM DETAIL

3/4" = 1'-0"

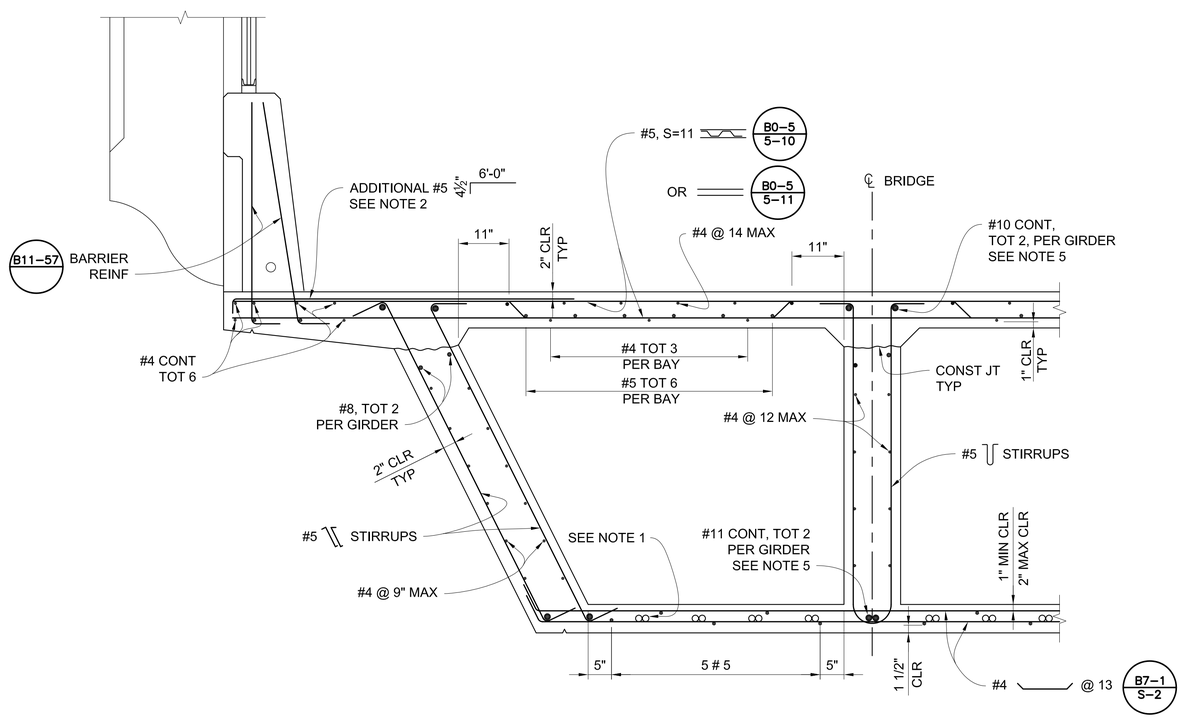

PART TYPICAL SECTION

3/4" = 1'-0"

B0-5 B7-1 S-2 B8-5 B11-57

LEGEND:

○ ADDITIONAL REINF

NOTES:

1. FOR ADDITIONAL GIRDER REINFORCEMENT, SEE SHEET S4-14.
2. BUNDLE WITH TOP TRANSVERSE BARS IN THE OVERHANG PLACE WITHIN 5'-0" FROM EXPANSION JOINTS AT ABUTMENTS.
3. FOR PICKET FENCE SEE SHEET S4-18.
4. FOR BRIDGE PILASTER DETAILS, SEE SHEET S4-15.
5. ONLY "SERVICE SPLICES" ARE ALLOWED IN #10 AND #11 REINF. SPLICE BARS AT ALTERNATE ENDS. NO SPLICES ARE ALLOWED WITHIN 20' FROM ℄ SPAN.

AS-BUILT

COUNTY OF ORANGE CALIFORNIA

MARK	DESCRIPTION	DATE	APPR.

PREPARED UNDER THE RESPONSIBLE CHARGE OF:

REGISTERED PROFESSIONAL ENGINEER QUOC TRONG NGUYEN No.C71743 Exp.12/31/13 CIVIL STATE OF CALIFORNIA

Q. NGUYEN
RCE: C 71743 (EXP.12-31-13)

JULY 16, 2013
DATE

DESIGNED BY: QN
DRAWN BY: NL
CHECKED BY: GR
DRAWING CODE:
JOB NO. 11017
PLOT DATE: 09/01/2016
SCALE: AS SHOWN

COUNTY OF ORANGE
OC PUBLIC WORKS

TEMA Engineers
10370 HEMET STREET, Suite 230
RIVERSIDE, CA 92503
Tel: (951) 687-1005

LA PATA AVENUE GAP CLOSURE
BRIDGE NO. 4

TYPICAL SECTION

Sheet Reference Number

S4-12

W:\11017 La Pata Ave Gap Closure\Construction Supports\As-builts\Bridge No. 4\20160831\S4-12 - Typical Section.dwg, Layout: Typical Section, Aug 24, 2016 2:58pm

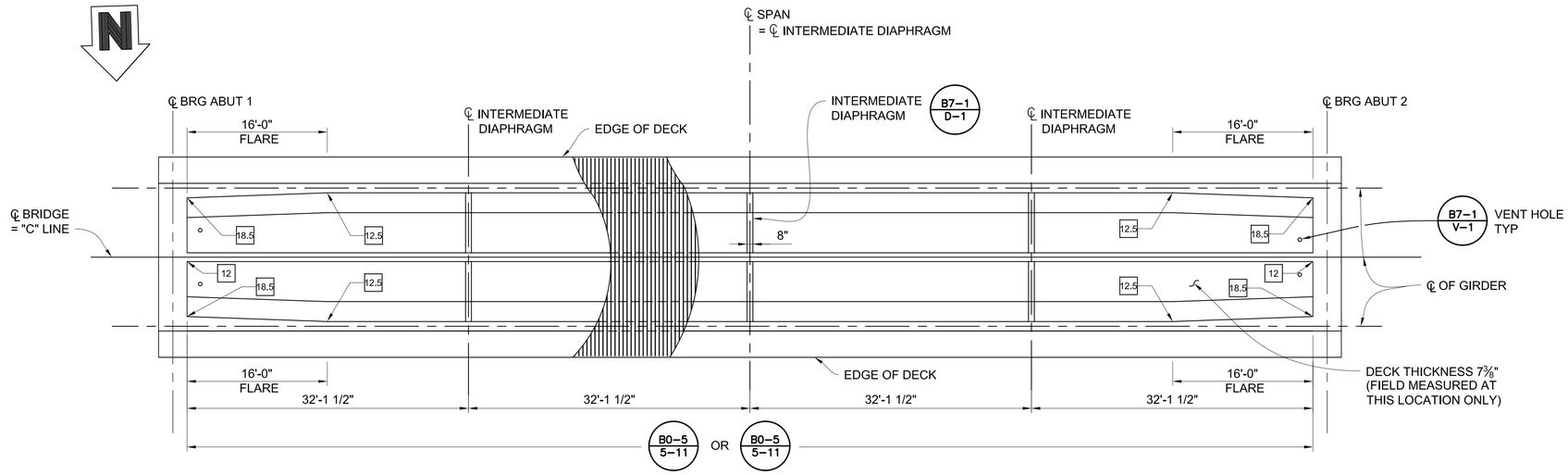

PLAN

1/8" = 1'-0"

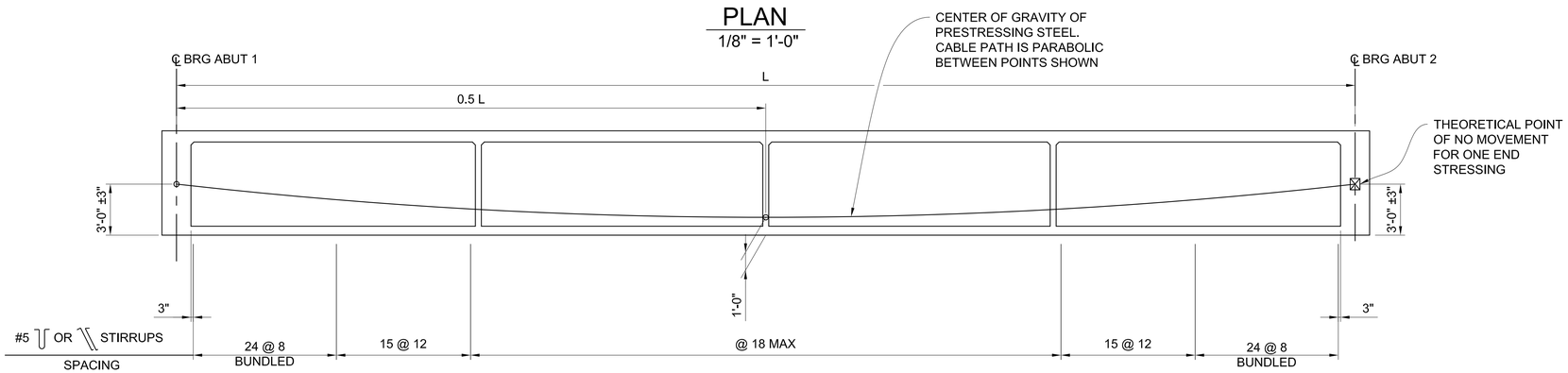

LONGITUDINAL SECTION

NO SCALE

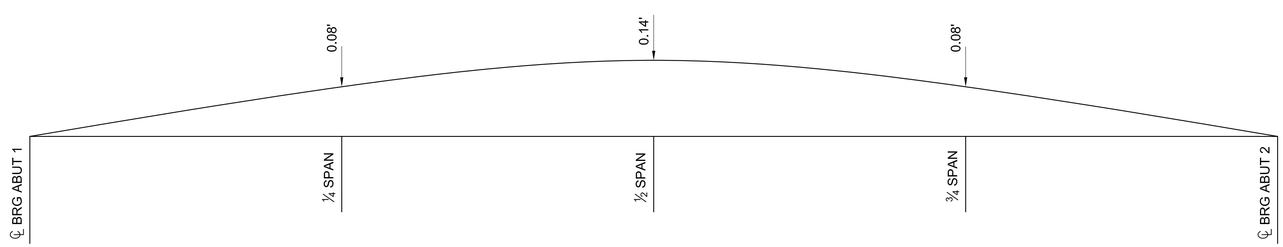

CAMBER DIAGRAM

NO SCALE

(DOES NOT INCLUDE ALLOWANCE FOR FALSEWORK SETTLEMENT)

LEGEND:

- 12 — INDICATES GIRDER STEM WIDTH IN INCHES.
- ⊠ — INDICATES THEORETICAL POINT OF NO MOVEMENT FOR ONE END STRESSING
- ∘ — INDICATES SOFFIT VENT

NOTE:

FOR END DIAPHRAGM, SEE SHEET S4-12.

PRESTRESSING NOTES:

270 ksi LOW RELAXATION STRAND:

P_{jack}	=	7,640	kips
ANCHOR SET	=	3/8	inches
TOTAL NUMBER OF GIRDERS	=	3	
FRICTION CURVATURE COEFFICIENT		μ = 0.15 (1/rad)	
FRICTION WOBBLE COEFFICIENT		K = 0.0002 (1/ft)	

DISTRIBUTION OF PRESTRESS FORCE (Pjack) BETWEEN GIRDERS SHALL NOT EXCEED THE RATIO OF 3:2.
MAXIMUM FINAL FORCE VARIATION BETWEEN GIRDERS SHALL NOT EXCEED 725 kips.

CONCRETE: f'_c = 5,000 psi @ 28 DAYS

f'_{ci} = 4,000 psi @ TIME OF STRESSING

CONTRACTOR SHALL SUBMIT ELONGATION CALCULATIONS BASED ON INITIAL STRESS AT

⊠ = 0.924 TIMES JACKING STRESS.

ONE END STRESSING SHALL BE PERFORMED FROM EITHER ABUT 1 OR ABUT 2.

AS-BUILT

COUNTY OF ORANGE CALIFORNIA

MARK	DESCRIPTION	DATE	APPR.

PREPARED UNDER THE RESPONSIBLE CHARGE OF:

REGISTERED PROFESSIONAL ENGINEER — QUOC TRONG NGUYEN — No.C71743 Exp.12/31/13 — CIVIL — STATE OF CALIFORNIA

Q. NGUYEN
RCE C 71743 (EXP.12–31–13)

JULY 16, 2013
DATE

DESIGNED BY: QN
DRAWN BY: NL
CHECKED BY: GR
DRAWING CODE:
JOB NO. 11017
PLOT DATE: 01/29/2018
SCALE: AS SHOWN

COUNTY OF ORANGE
OC PUBLIC WORKS

TEMA Engineers
10370 HEMET STREET, Suite 230
RIVERSIDE, CA 92503
Tel: (951) 687-1005

LA PATA AVENUE GAP CLOSURE
BRIDGE NO. 4

GIRDER LAYOUT

Sheet Reference Number

S4-13

W:\11017 La Pata Ave Gap Closure\Construction Support\As-builts\Bridge No. 4\20180129\S4-13 – Girder Layout.dwg, Layout: Girder Layout, Jan 29 2018 4:21pm

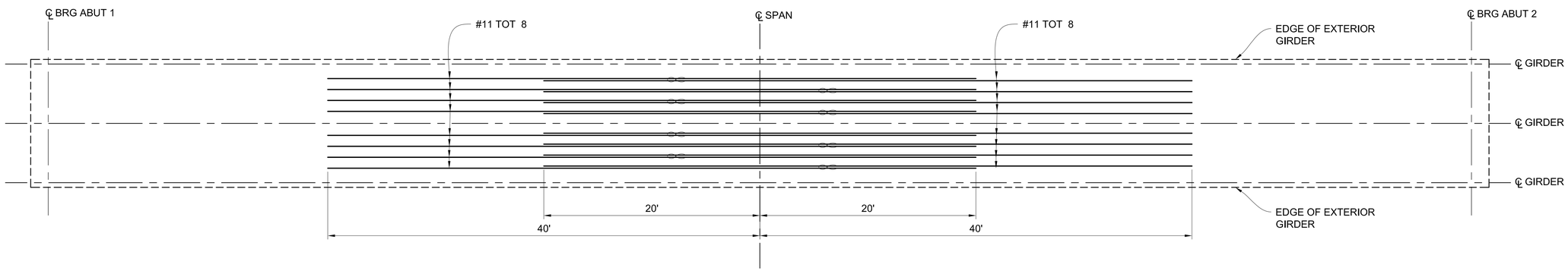

ADDITIONAL BOTTOM SLAB REINFORCEMENT

3/16" = 1'-0"

LEGEND:

INDICATES BUNDLED REINFORCEMENT.

NOTES:

1. FOR DETAILS NOT SHOWN, SEE SHEET S4-12.
2. SPLICES ARE NOT ALLOWED.

AS-BUILT

COUNTY OF ORANGE CALIFORNIA

MARK	DESCRIPTION	DATE	APPR.

PREPARED UNDER THE RESPONSIBLE CHARGE OF:

REGISTERED PROFESSIONAL ENGINEER QUYET TRONG NGUYEN No.C71743 Exp.12/31/13 CIVIL STATE OF CALIFORNIA

Q. NGUYEN
RCE C 71743 (EXP.12-31-13)

JULY 16, 2013
DATE

DESIGNED BY: QN
DRAWN BY: NL
CHECKED BY: GR
DRAWING CODE:
JOB NO. 11017
PLOT DATE: 09/01/2016
SCALE: AS SHOWN

COUNTY OF ORANGE
OC PUBLIC WORKS

TENG Engineers
10370 HEMET STREET, Suite 230
RIVERSIDE, CA 92503
Tel: (951) 687-1005

LA PATA AVENUE GAP CLOSURE
BRIDGE NO. 4

ADDITIONAL GIRDER REINFORCEMENT

Sheet Reference Number

S4-14

W:\11017 La Pata Ave Gap Closure\Construction Supports\As-built\Bridge No. 4\20160831\S4-14 - Girder Reinforcement.dwg, Layout: Girder Reinforcement, Aug 24 2016 9:39am

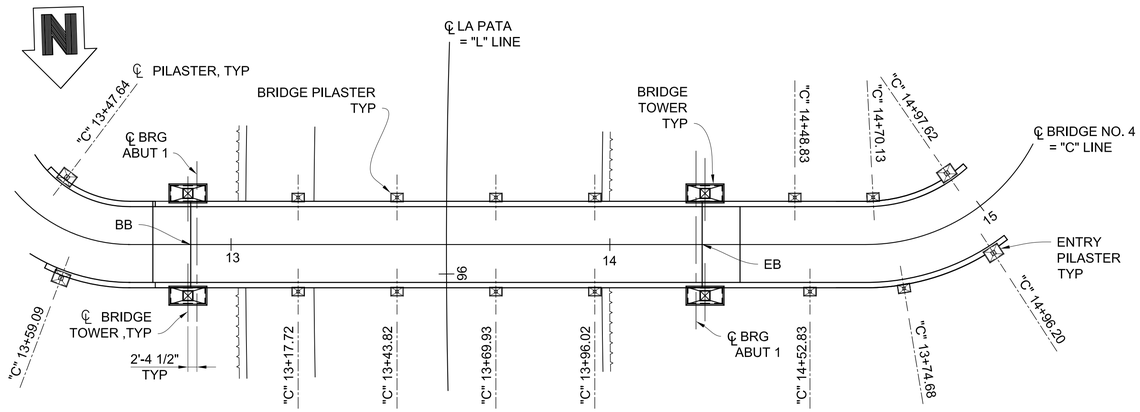

PILASTER PLAN

1" = 20'

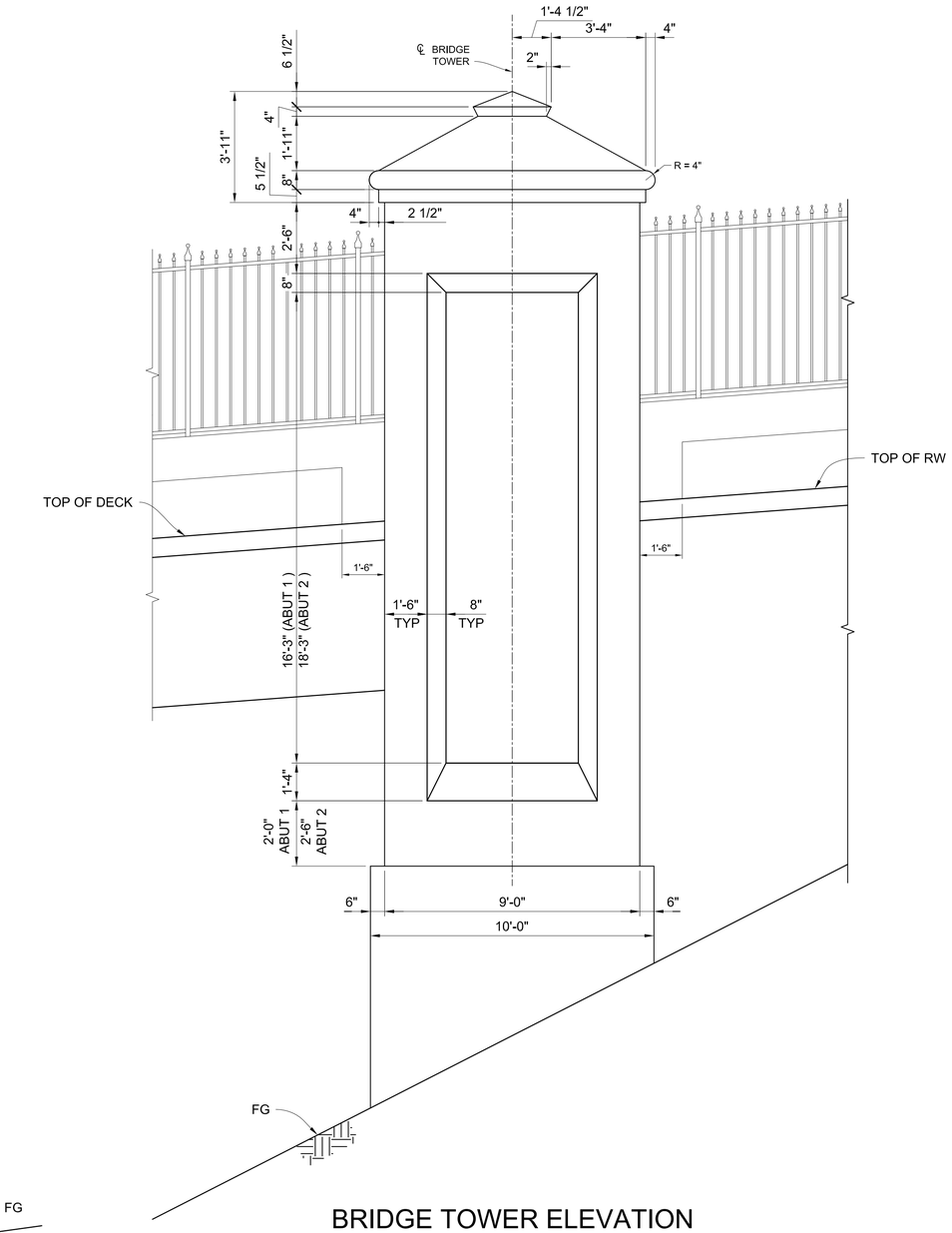

BRIDGE TOWER ELEVATION

3/8" = 1'-0"

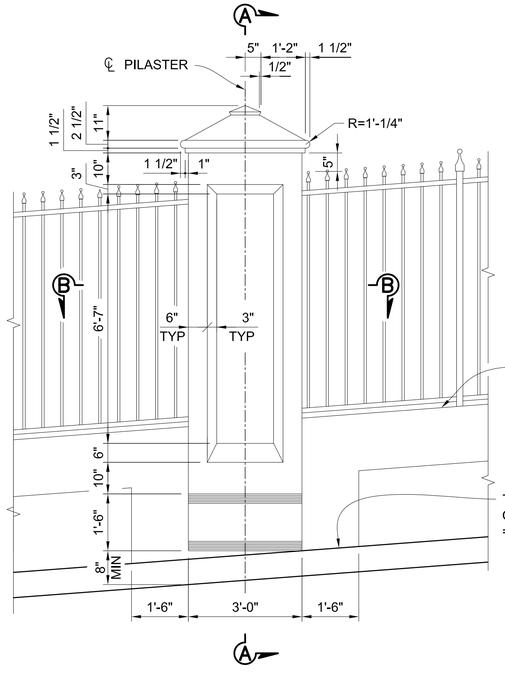

BRIDGE PILASTER ELEVATION

1/2" = 1'-0"

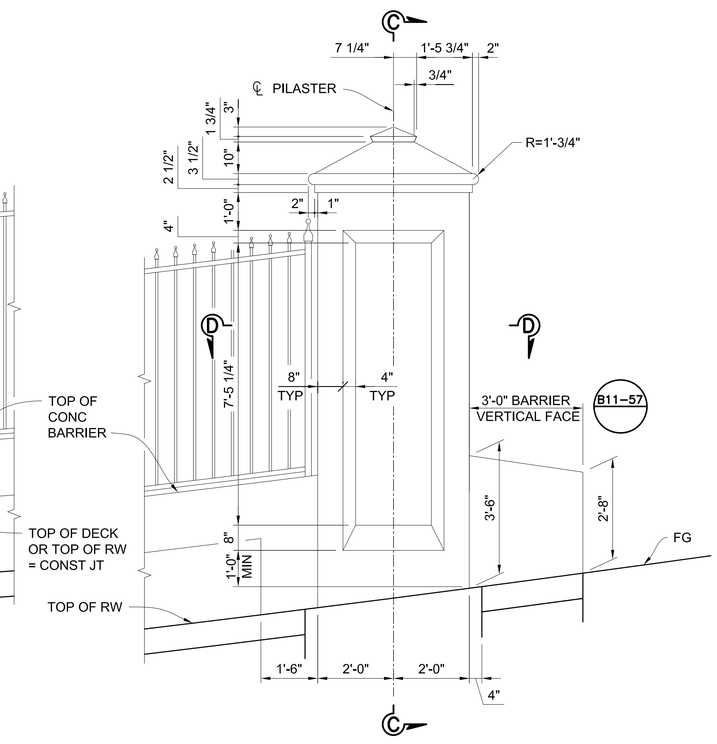

ENTRY PILASTER ELEVATION

1/2" = 1'-0"

NOTES:

1. ALL EXPOSED CONCRETE SURFACES INCLUDING THE SURFACES AT ENTRY PILASTERS, BRIDGE PILASTERS, BRIDGE TOWERS, CONCRETE BARRIERS, ABUTMENTS, RETAINING WALLS AND BOX GIRDER EXCEPT DECK SURFACE TO BE STAINED IN MESA BEIGE.
2. FOR LIMITS OF STAINED CONCRETE ON ABUTMENT AND RETAINING WALL SURFACES, SEE SHEET S4-17.
3. FOR "SECTIONS A-A, B-B, C-C AND D-D", SEE SHEET S4-16.

AS-BUILT

COUNTY OF ORANGE CALIFORNIA

MARK	DESCRIPTION	DATE	APPR.

PREPARED UNDER THE RESPONSIBLE CHARGE OF:

REGISTERED PROFESSIONAL ENGINEER — QUOC TRONG NGUYEN — No.C71743 Exp.12/31/13 — CIVIL — STATE OF CALIFORNIA

Q. NGUYEN
RCE C 71743 (EXP.12-31-13)

JULY 16, 2013
DATE

DESIGNED BY: QN
DRAWN BY: NL
CHECKED BY: GR
DRAWING CODE:
JOB NO. 11017
PLOT DATE: 09/01/2016
SCALE: AS SHOWN

COUNTY OF ORANGE
OC PUBLIC WORKS

TENG Engineers
10370 HEMET STREET, Suite 230
RIVERSIDE, CA 92503
Tel: (951) 687-1005

LA PATA AVENUE GAP CLOSURE
BRIDGE NO. 4

ARCHITECTURAL TREATMENT DETAILS NO. 1

Sheet Reference Number

S4-15

w:\11017 La Pata Ave Gap Closure\Construction Supports\As-builts\Bridge No. 4\20160831\S4-15_17 - Architectural Treatments.dwg, Layout: S15 ARCH DETAILS NO. 1, Aug 24, 2016 3:04pm

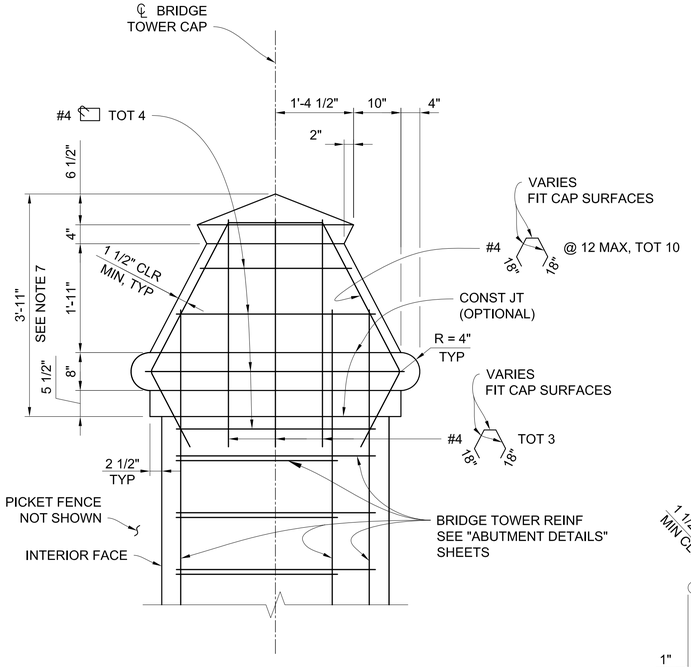

BRIDGE TOWER CAP ELEVATION

3/4" = 1'-0"

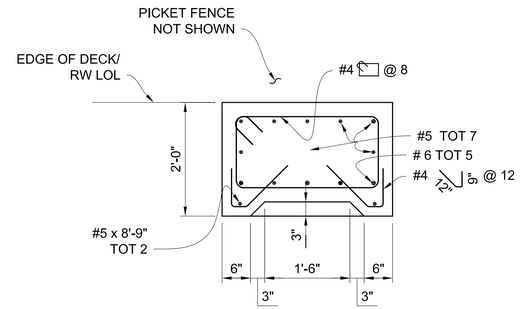

(BRIDGE PILASTER)

SECTION B-B

3/4" = 1'-0"

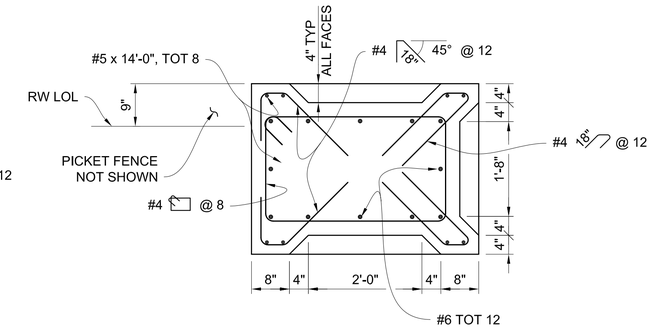

(ENTRY PILASTER)

SECTION D-D

3/4" = 1'-0"

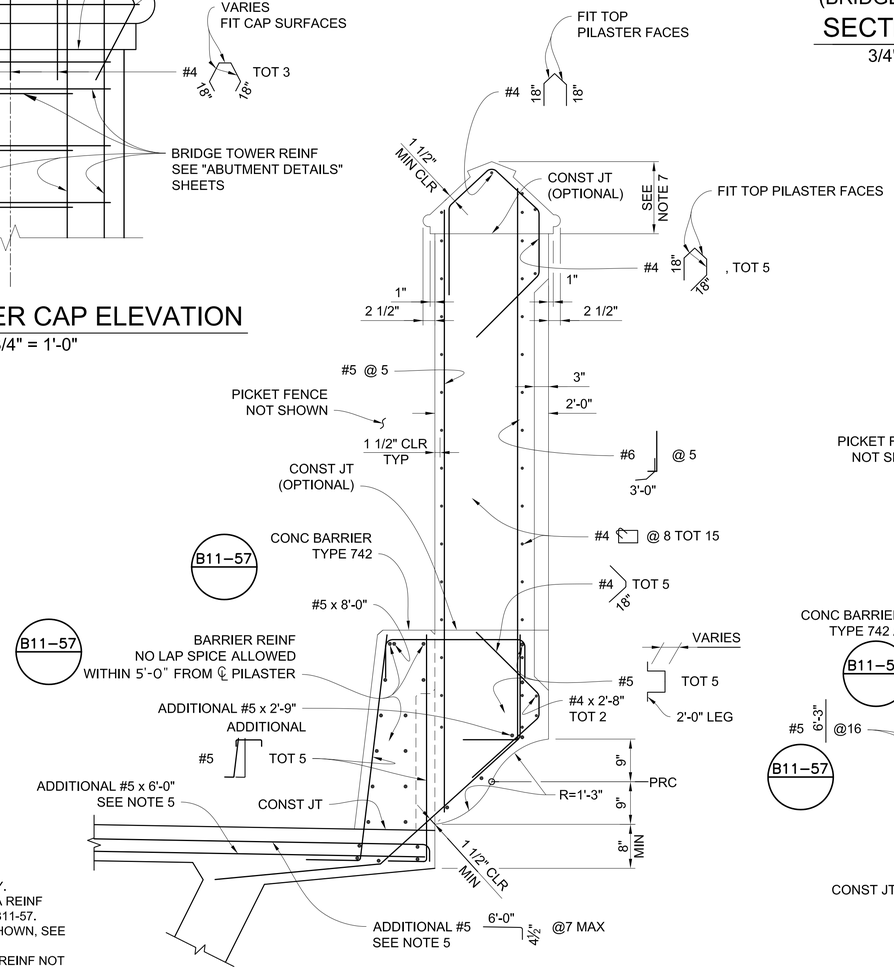

AT BRIDGE OVERHANG

NOTES:

1. ALL REINF NOT SHOWN FOR CLARITY.
2. FOR CONC BARRIER TYPE 742 & 742A REINF NOT SHOWN, SEE STANDARD PLAN B11-57.
3. FOR DECK OVERHANG REINF NOT SHOWN, SEE SHEET S4-12.
4. FOR RETAINING WALL TYPE 1 (MOD) REINF NOT SHOWN, SEE SHEET S4-11.
5. BUNDLE WITH TOP AND BOTTOM TRANSVERSE BARS IN THE OVERHANG. PLACE WITHIN 5'-0" FROM CENTER LINE OF BRIDGE PILASTER.
6. FOR LOCATIONS OF "SECTIONS A-A, B-B, C-C AND D-D", SEE S4-15 SHEET.
7. PRECAST REINFORCED CONCRETE FOR PILASTER AND BRIDGE TOWER CAPS MAY BE USED. THE CONTRACTOR SHALL SUBMIT DETAILS FOR APPROVAL BY THE ENGINEER.

(BRIDGE PILASTER)

SECTION A-A

3/4" = 1'-0"

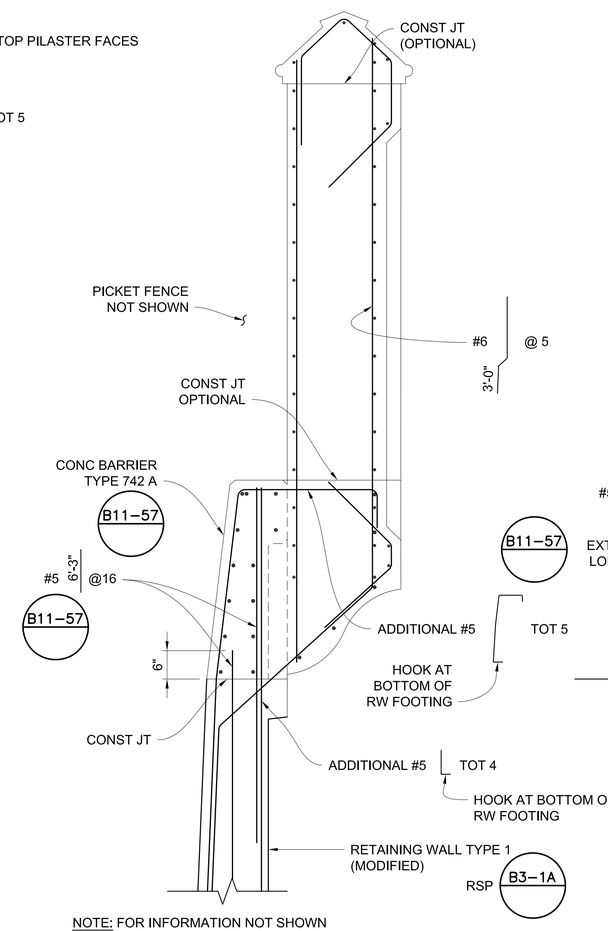

NOTE: FOR INFORMATION NOT SHOWN SEE "AT BRIDGE OVERHANG"

AT RETAINING WALL

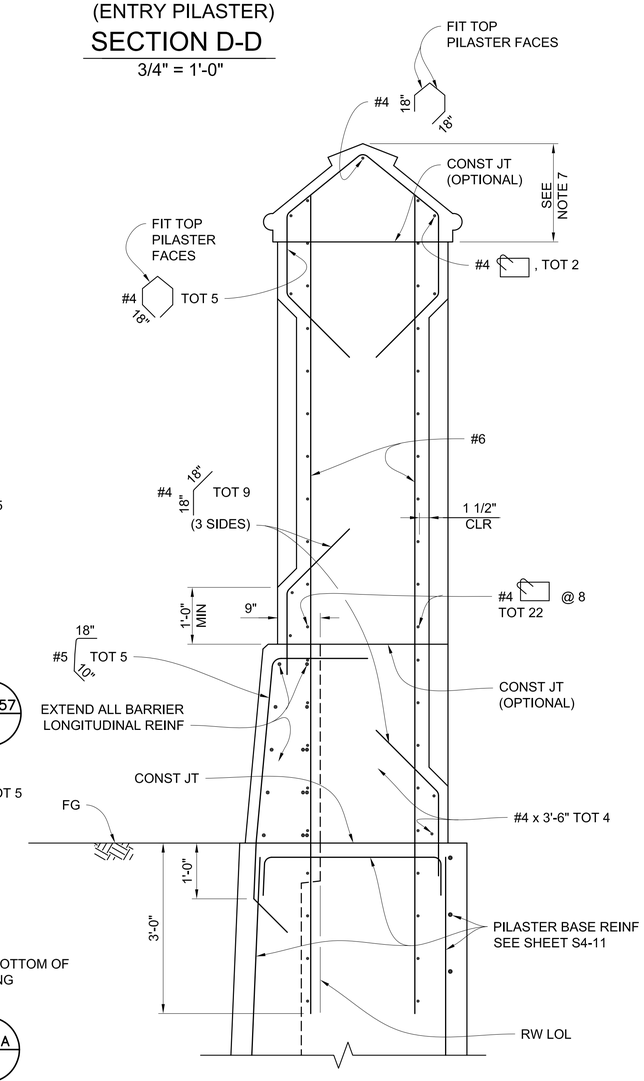

(ENTRY PILASTER)

SECTION C-C

3/4" = 1'-0"

AS-BUILT

COUNTY OF ORANGE CALIFORNIA

MARK	DESCRIPTION	DATE	APPR.

PREPARED UNDER THE RESPONSIBLE CHARGE OF:

REGISTERED PROFESSIONAL ENGINEER — QUOC TRONG NGUYEN — No.C71743 Exp.12/31/13 — CIVIL — STATE OF CALIFORNIA

Q. NGUYEN
RCE: C 71743 (EXP.12-31-13)

JULY 16, 2013
DATE

DESIGNED BY: QN
DRAWN BY: NIL
CHECKED BY: GR
DRAWING CODE:
JOB NO. 11017
PLOT DATE: 09/01/2016
SCALE: AS SHOWN

COUNTY OF ORANGE
OC PUBLIC WORKS

TRANSTEC Engineers
10370 HEMET STREET, Suite 230
RIVERSIDE, CA 92503
Tel: (951) 687-1005

LA PATA AVENUE GAP CLOSURE
BRIDGE NO. 4

ARCHITECTURAL TREATMENT DETAILS NO. 2

Sheet Reference Number

S4-16

W:\11017 La Pata Ave Gap Closure\Construction Support\As-builts\Bridge No. 4\20160831\S4-15_17 - Architectural Treatments.dwg, Layout: S16 ARCH DETAILS NO. 2, Aug 24, 2016 3:04pm

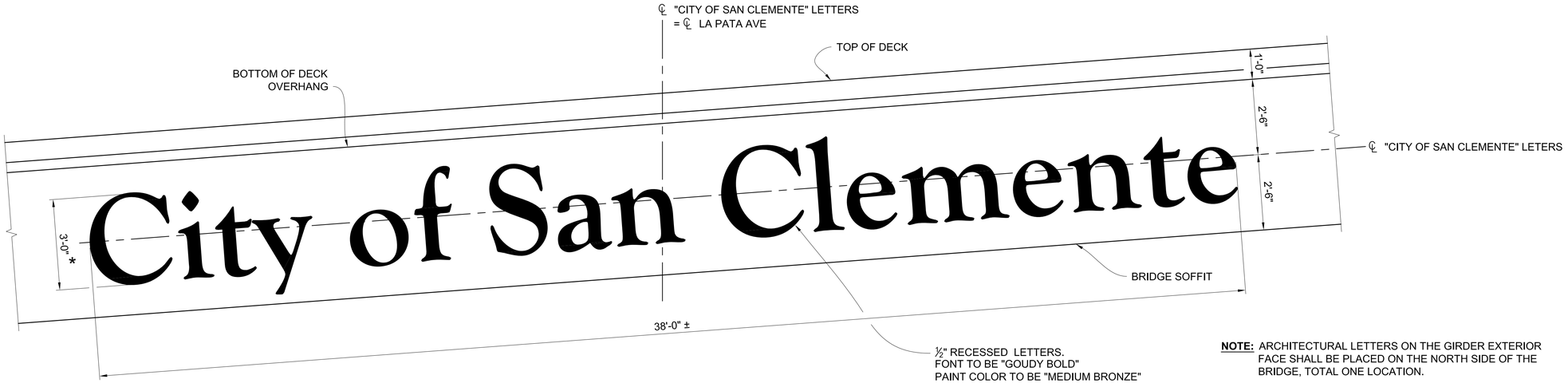

NOTE: ARCHITECTURAL LETTERS ON THE GIRDER EXTERIOR FACE SHALL BE PLACED ON THE NORTH SIDE OF THE BRIDGE, TOTAL ONE LOCATION.

* MEASURED ALONG INCLINED FACE OF THE EXTERIOR GIRDER.

ARCHITECTURAL LETTER DETAIL

1/2" = 1'-0"

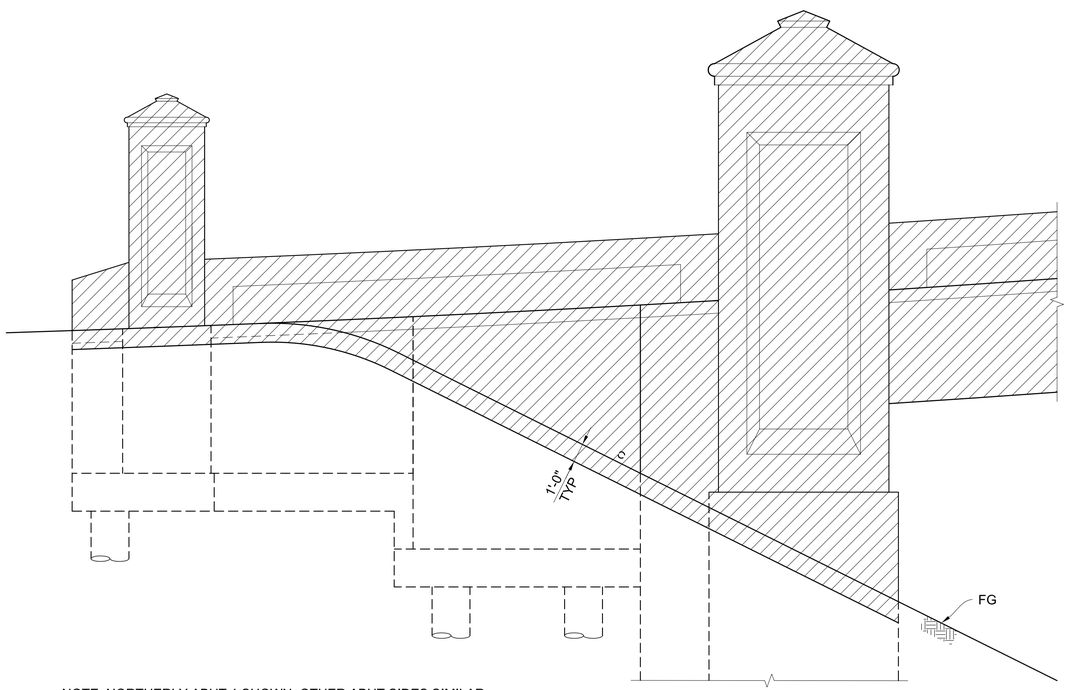

NOTE: NORTHERLY ABUT 1 SHOWN, OTHER ABUT SIDES SIMILAR.

SIDE ELEVATION

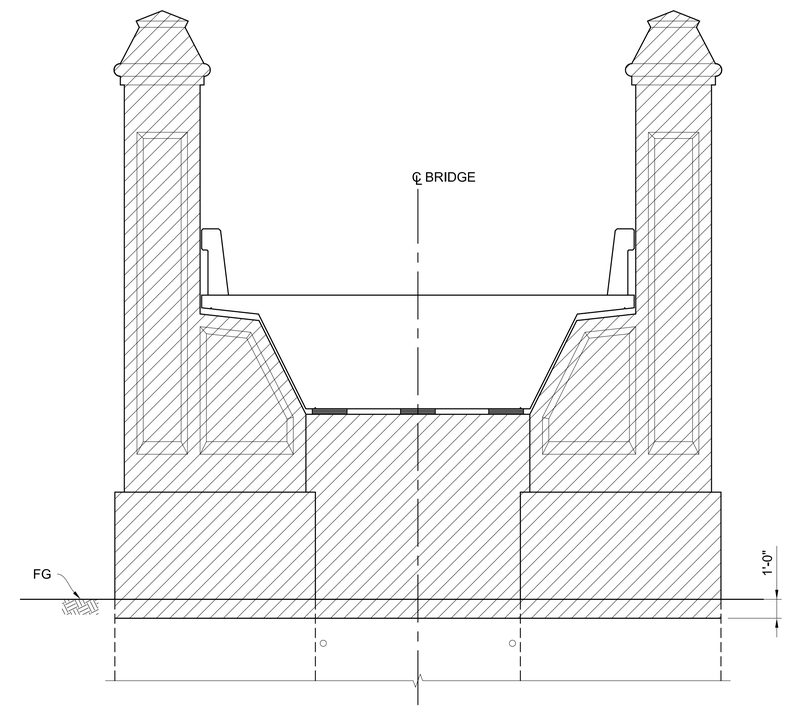

FRONT ELEVATION

LEGEND:

INDICATES STAINED CONCRETE

LIMIT OF STAINED CONCRETE AT ABUTMENTS AND RETAINING WALLS

1/4" = 1'-0"

AS-BUILT

COUNTY OF ORANGE CALIFORNIA

MARK	DESCRIPTION	DATE	APPR.

PREPARED UNDER THE RESPONSIBLE CHARGE OF:

REGISTERED PROFESSIONAL ENGINEER — QUOC TRONG NGUYEN — No.C71743 Exp.12/31/13 — CIVIL — STATE OF CALIFORNIA

Q. NGUYEN
RCE: C 71743 (EXP.12-31-13)

JULY 16, 2013
DATE

DESIGNED BY: QN
DRAWN BY: NL
CHECKED BY: GR
DRAWING CODE:
JOB NO. 11017
PLOT DATE: 09/01/2016
SCALE: AS SHOWN

COUNTY OF ORANGE
OC PUBLIC WORKS

TENG Engineers
10370 HEMET STREET, Suite 230
RIVERSIDE, CA 92503
Tel: (951) 687-1005

LA PATA AVENUE GAP CLOSURE
BRIDGE NO. 4

ARCHITECTURAL TREATMENT DETAILS NO. 3

Sheet Reference Number

S4-17

w:\11017 La Pata Ave Gap Closure\Construction Supports\As-builts\Bridge No. 4\20160831\S4-15_17 - Architectural Treatments.dwg, Layout: S17 ARCH DETAILS NO. 3, Aug 24, 2016 3:04pm

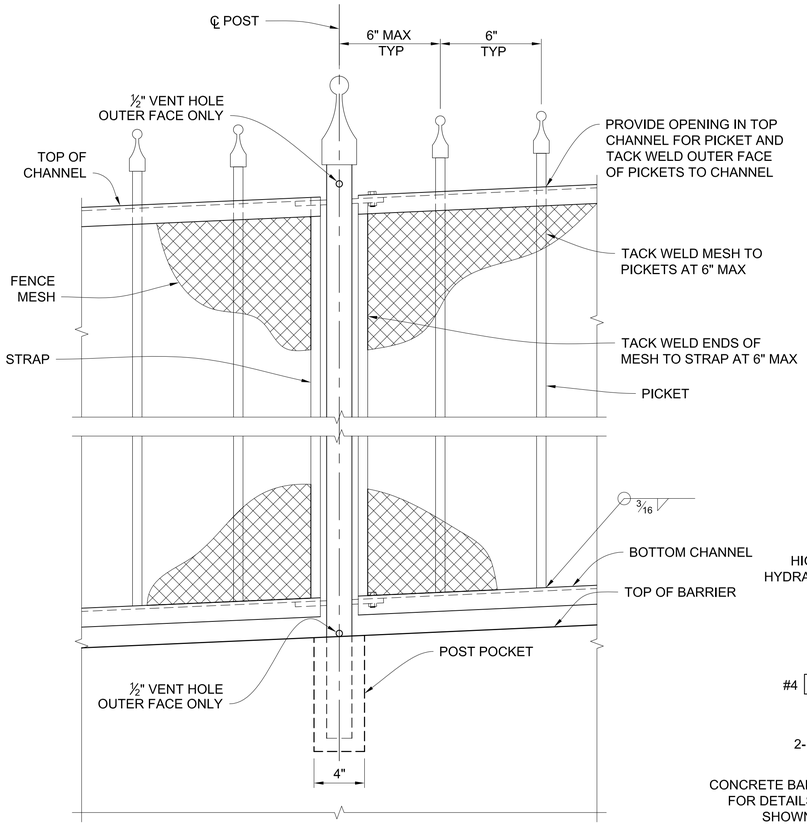

DETAIL 1
2" = 1'-0"

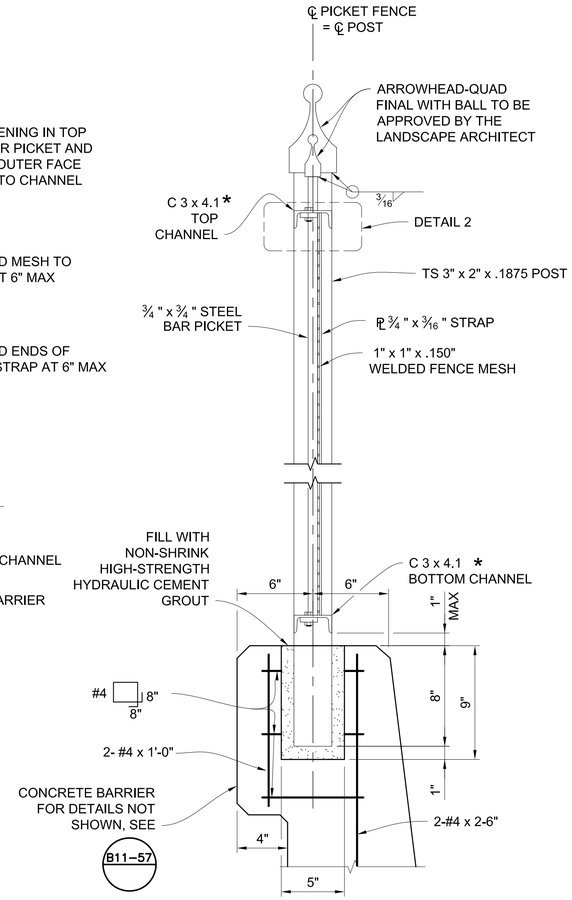

TYPICAL SECTION
2" = 1'-0"

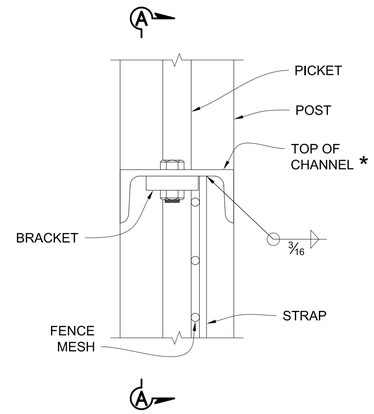

* TOP AND BOTTOM CHANNEL TO BE PLACED PARALLEL TO EDGE OF DECK AND RETAINING WALL LOL.

DETAIL 2
6" = 1'-0"

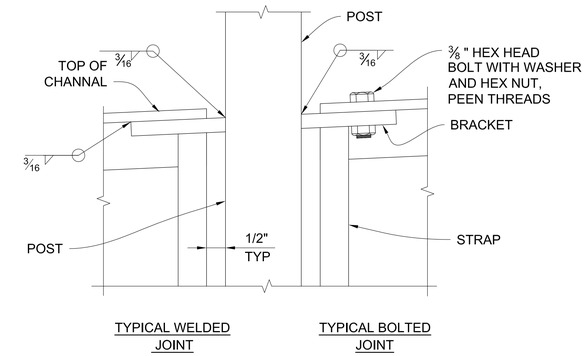

NOTE:
1. BOTTOM CHANNEL ATTACHMENT SIMILAR.
2. "TYPICAL WELDED JOINT" MAY BE REPLACED WITH THE "TYPICAL BOLTED JOINT".

SECTION A-A
6" = 1'-0"

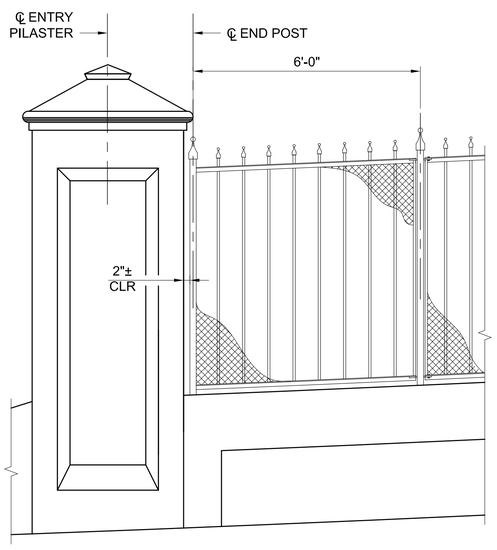

END ELEVATION
1/2" = 1'-0"

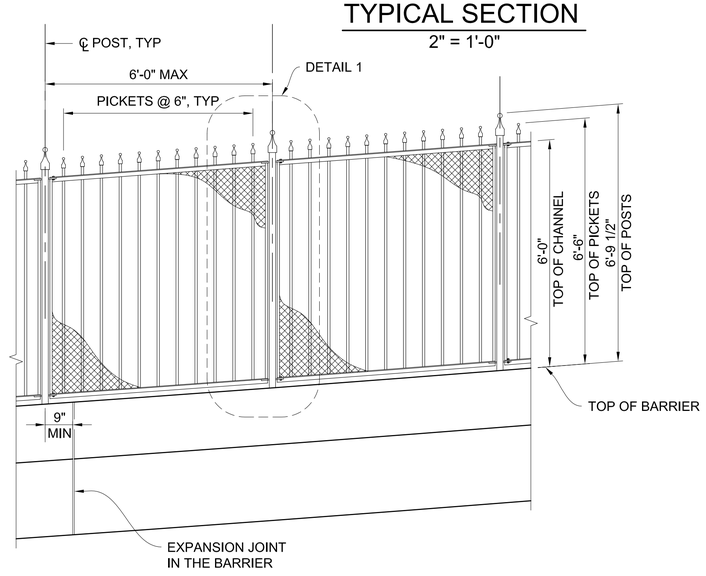

TYPICAL PICKET FENCE ELEVATION
1/2" = 1'-0"

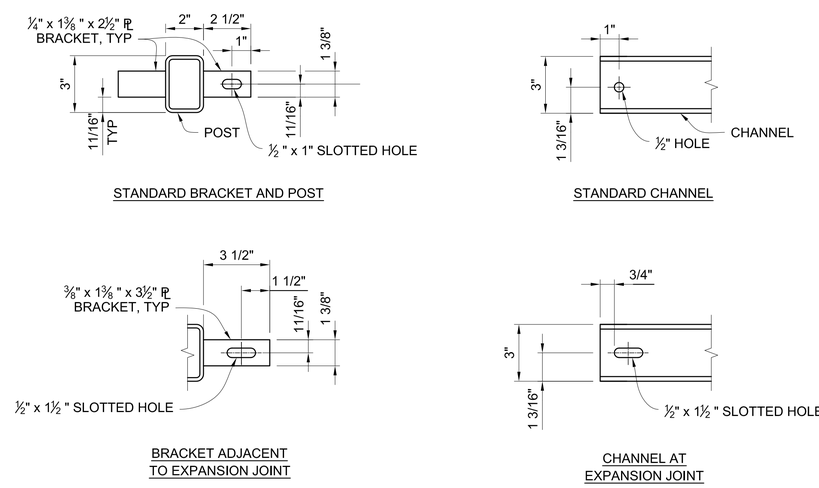

BRACKET AND CHANNEL PLAN
3" = 1'-0"

NOTES:

1. PICKET FENCE ASSEMBLY INCLUDING WELDED FENCE MESH SHALL BE GALVANIZED AND PAINTED IN MEDIUM BRONZE.
2. PICKET FENCE SHALL CONFORM TO HORIZONTAL AND VERTICAL ALIGNMENT. POST SHALL BE VERTICAL.

AS-BUILT

COUNTY OF ORANGE CALIFORNIA

MARK	DESCRIPTION	DATE	APPR.

PREPARED UNDER THE RESPONSIBLE CHARGE OF:
REGISTERED PROFESSIONAL ENGINEER QUOC TRONG NGUYEN No.C71743 Exp.12/31/13 CIVIL STATE OF CALIFORNIA
Q. NGUYEN
RCE: C 71743 (EXP.12-31-13)
JULY 16, 2013
DATE

DESIGNED BY: QN
DRAWN BY: NL
CHECKED BY: GR
DRAWING CODE:
JOB NO. 11017
PLOT DATE: 09/01/2016
SCALE: AS SHOWN

COUNTY OF ORANGE
OC PUBLIC WORKS

TENG Engineers
10370 HEMET STREET, Suite 230
RIVERSIDE, CA 92503
Tel: (951) 687-1005

LA PATA AVENUE GAP CLOSURE
BRIDGE NO. 4

PICKET FENCE DETAILS

Sheet Reference Number
S4-18

W:\11017 La Pata Ave Gap Closure\Construction Supports\As-builts\Bridge No. 4\20160831\S4-18 - Picket Fence Details.dwg, Layout: PICKET FENCE DETAILS, Aug 24, 2016 9:23am

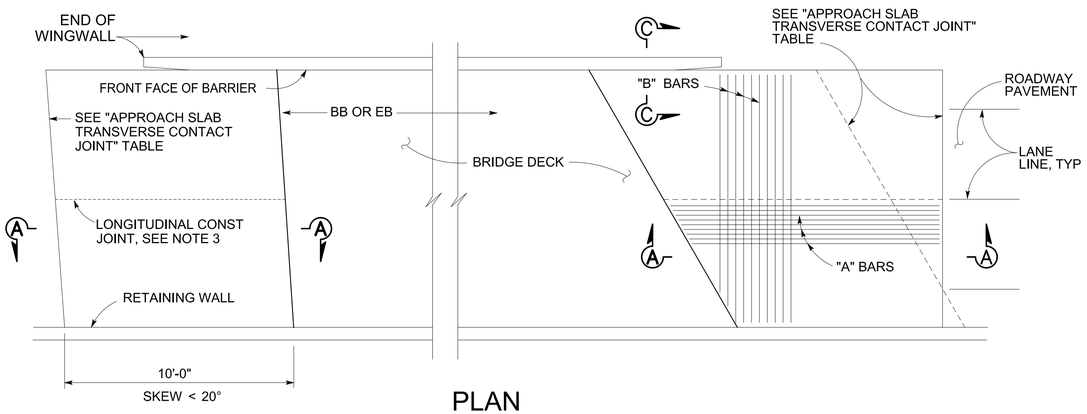

PLAN
1" = 10'

APPROACH SLAB TRANSVERSE CONTACT JOINT		
APPROACH SKEW	WITH AC ROADWAY PAVEMENT	WITH PCC ROADWAY PAVEMENT
< 20°	PARALLEL TO FACE OF PN	PARALLEL TO FACE OF PN

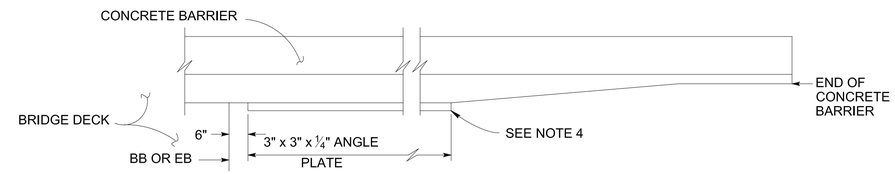

EDGE ANGLE DETAIL
½"=1'-0"

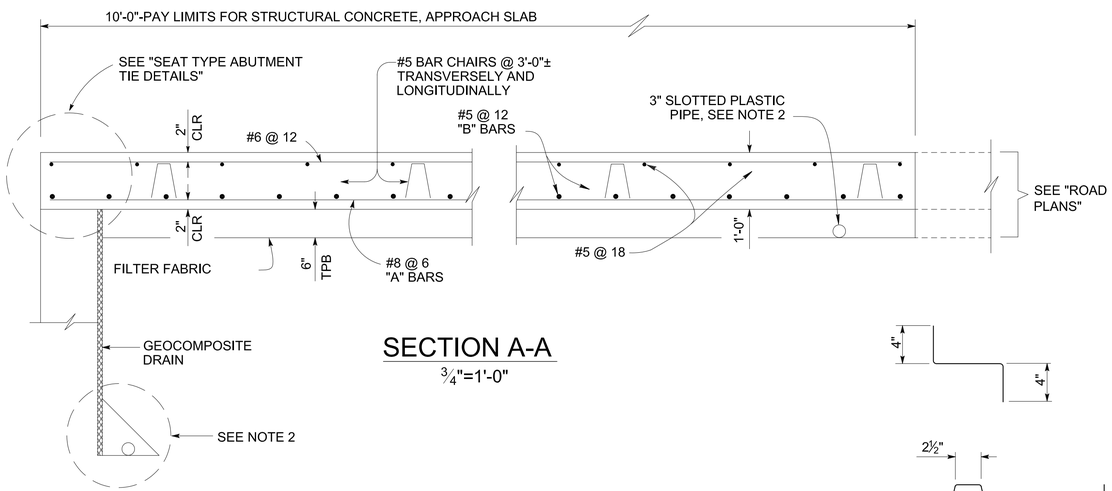

SECTION A-A
¾"=1'-0"

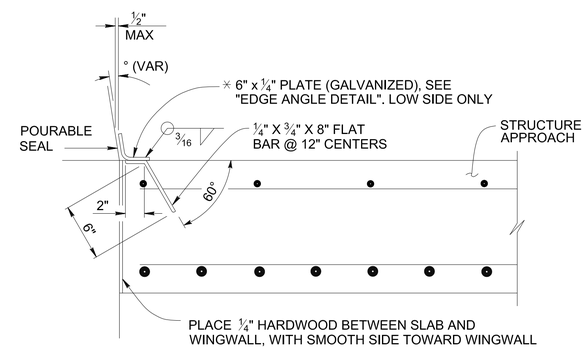

*(TO BE USED WITH CONCRETE BARRIER WITH SLOPING FACE)

DETAIL B
1½"=1'-0"

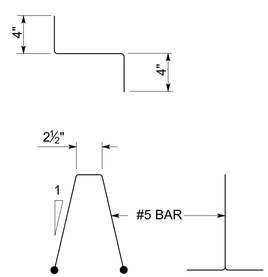

BAR CHAIR DETAIL
1½"=1'-0"

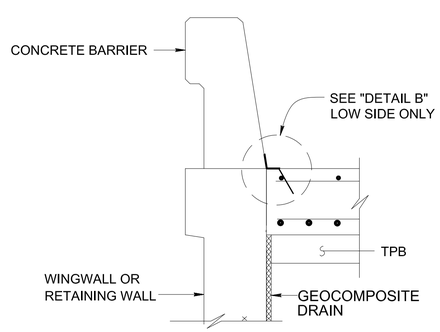

TYPE E-2

SECTION C-C
¾"=1'-0"

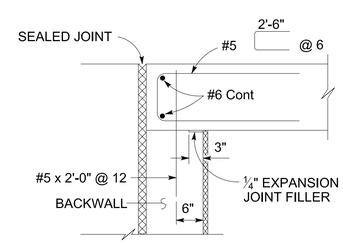

MR ≤ 2"

SEAT TYPE ABUTMENT TIE DETAILS (SEE NOTE 1)
¾"=1'-0"

NOTES:

1. FOR DETAILS NOT SHOWN, SEE SHEETS S4-4 AND S4-12. FOR MR ≤ 2", ADJUST BAR REINFORCEMENT TO CLEAR A SAWCUT FOR SEALED JOINT, WHEN REQUIRED.
2. FOR DRAINAGE DETAILS, SEE SHEET S4-20.
3. LONGITUDINAL CONSTRUCTION JOINTS, WHEN PERMITTED BY THE ENGINEER, SHALL BE LOCATED ON LANE LINES
4. END PLATE AT END OF STRUCTURE APPROACH AS APPLICABLE.
5. AT THE CONTRACTOR'S OPTION, APPROACH SLAB TRANSVERSE REINFORCEMENT MAY BE PLACED PARALLEL TO PAVING NOTCH. SPACING OF TRANSVERSE REINFORCEMENT IS MEASURED ALONG ℄ ROADWAY.

NOTE:
THE DETAILS ON THIS SHEET ARE COPIED AND MODIFIED FROM CALTRANS STANDARD PLAN XS3-120, DATED JULY 2011.

AS-BUILT

COUNTY OF ORANGE CALIFORNIA

MARK	DESCRIPTION	DATE	APPR.

PREPARED UNDER THE RESPONSIBLE CHARGE OF:
REGISTERED PROFESSIONAL ENGINEER QUOC TRONG NGUYEN No.C71743 Exp.12/31/13 CIVIL STATE OF CALIFORNIA
Q. NGUYEN
RCE: C 71743 (EXP.12-31-13)
JULY 16, 2013
DATE

DESIGNED BY: QN
DRAWN BY: NL
CHECKED BY: GR
DRAWING CODE:
JOB NO. 11017
PLOT DATE: 09/01/2016
SCALE: AS SHOWN

COUNTY OF ORANGE
OC PUBLIC WORKS

TEMA Engineers
10370 HEMET STREET, Suite 230
RIVERSIDE, CA 92503
Tel: (951) 687-1005

LA PATA AVENUE GAP CLOSURE
BRIDGE NO. 4

STRUCTURE APPROACH TYPE N(10S)

Sheet Reference Number

S4-19

W:\11017 La Pata Ave Gap Closure\Construction Supports\As-builts\Bridge No. 4\20160831\S4-19 - Structure Approach Type N (10S).dwg, Layout: Structure Approach Type N (10S), Aug 24, 2016 9:22am

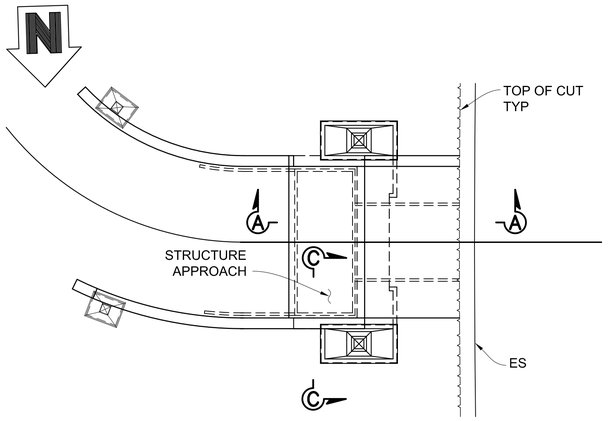

ABUT 1 PLAN
1" = 10'-0"

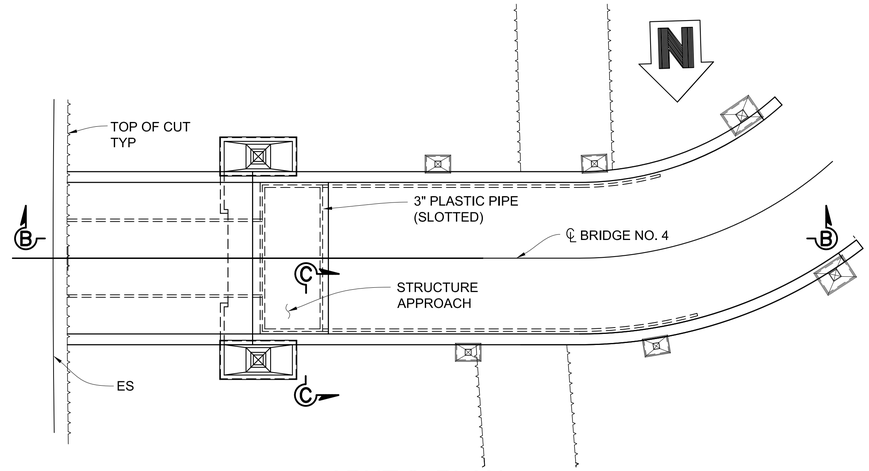

ABUT 2 PLAN
1" = 10'-0"

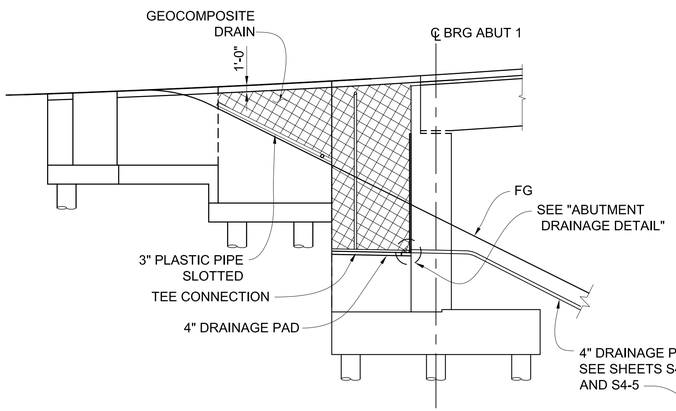

SECTION A-A
1/8" = 1'-0"

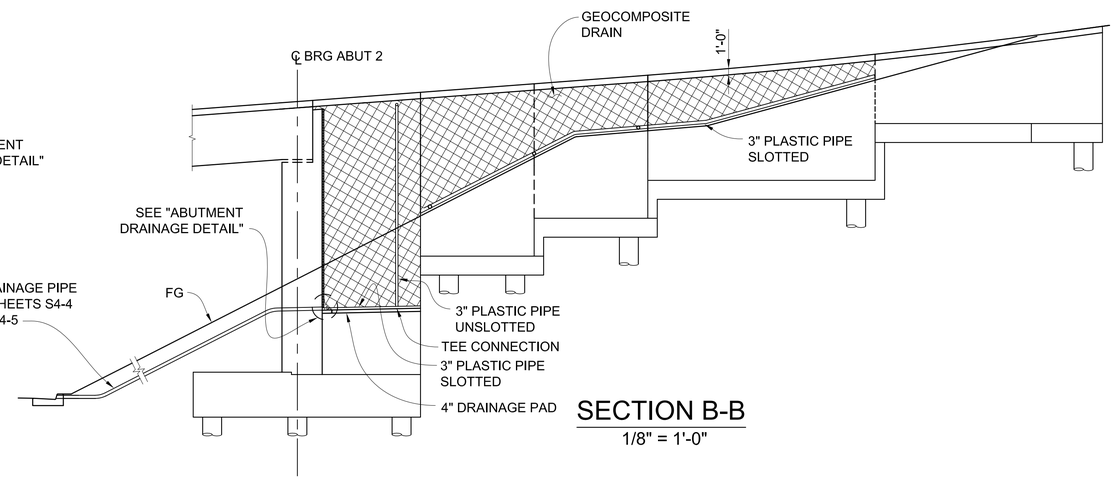

SECTION B-B
1/8" = 1'-0"

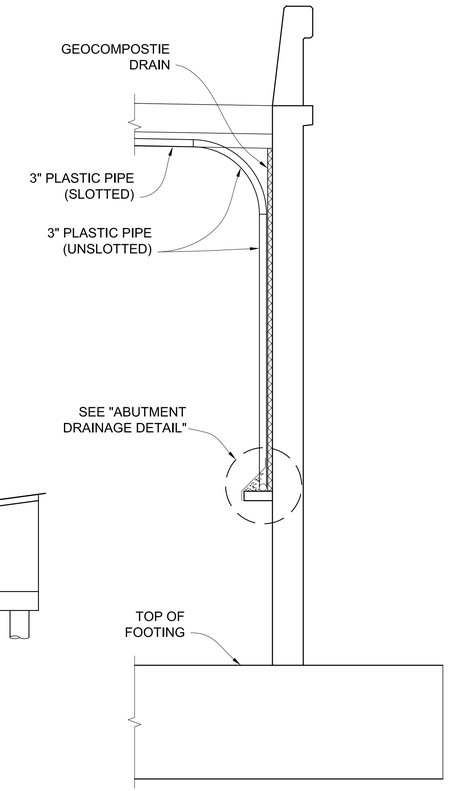

SECTION C-C
3/8" = 1'-0"

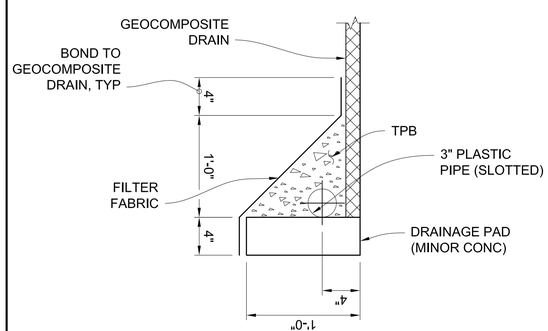

ABUTMENT DRAINAGE DETAIL
1-1/2" = 1'-0"

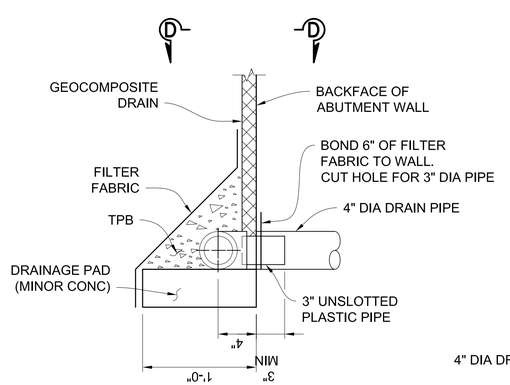

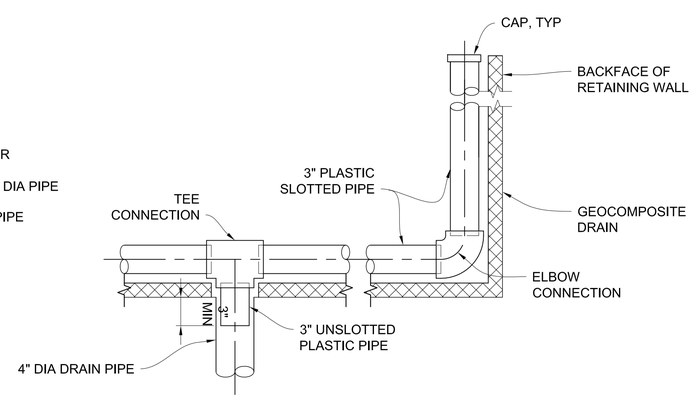

SECTION D-D
1-1/2" = 1'-0"

NOTES:

1. 4" OUTLET DRAINS AT INTERMEDIATE SAG POINTS, SEE SHEETS S4-4 AND S4-5 FOR DETAILS. EXPOSED WALL DRAIN SHALL BE LOCATED 3"± ABOVE FINISHED GRADE.
2. GEOCOMPOSITE DRAIN, CEMENT TREATED PERMEABLE BASE, AND 3" SLOTTED PLASTIC PIPE CONTINUOUS BEHIND ABUTMENT RETURN WALLS AND RETAINING WALL. PROVIDE "TEE" CONNECTION AT 4" PLASTIC PIPE OUTLET DRAIN.
3. ADJUST ABUTMENT/ RETAINING WALL REINFORCEMENT TO CLEAR THE 4" PLASTIC PIPE.
4. BENTS AND JUNCTIONS IN 3" PLASTIC PIPE ARE 2'-6" RADIUS MIN.
5. PROVIDE TEE CONNECTION AT VERTICAL UNSLOTTED PLASTIC PIPES.

AS-BUILT

COUNTY OF ORANGE CALIFORNIA

MARK	DESCRIPTION	DATE	APPR.

REGISTERED PROFESSIONAL ENGINEER QUOC TRONG NGUYEN No.C71743 Exp.12/31/13 CIVIL STATE OF CALIFORNIA

PREPARED UNDER THE RESPONSIBLE CHARGE OF:
Q. NGUYEN
RCE: C 71743 (EXP.12-31-13)
JULY 16, 2013
DATE

DESIGNED BY: QN
DRAWN BY: NIL
CHECKED BY: GR
DRAWING CODE:
JOB NO. 11017
PLOT DATE: 09/01/2016
SCALE: AS SHOWN

COUNTY OF ORANGE
OC PUBLIC WORKS

TRC Engineers
10370 HEMET STREET, Suite 230
RIVERSIDE, CA 92503
Tel: (951) 687-1005

LA PATA AVENUE GAP CLOSURE
BRIDGE NO. 4

STRUCTURE APPROACH DRAINAGE DETAILS

Sheet Reference Number

S4-20

W:\11017 La Pata Ave Gap Closure\Construction Supports\As-builts\Bridge No. 4\2016083\S4-20 - Structure Approach Drainage Details.dwg, Layout: DRAINAGE DETAILS, Aug 24, 2016 3:06pm

A

AB	AGGREGATE BASE
ABBC	ASBESTOS BONDED BITUMINOUS COATED
ABM	AIR-BLOWN MORTAR
Abn	ABANDON
Abut	ABUTMENT
AC	ASPHALT CONCRETE
ACB	ASPHALT CONCRETE BASE
ACP	ASBESTOS CEMENT PIPE
ADL	ADDED DEAD LOAD
Adj	ADJUST
AFES	ALTERNATIVE FLARED END SECTION
Ahd	AHEAD
Alt	ALTERNATE
AM	TIME FROM MIDNIGHT TO NOON
AP	ALTERNATIVE PIPE
APC	ALTERNATIVE PIPE CULVERT
Approx	APPROXIMATE
APU	ALTERNATIVE PIPE UNDERDRAIN
ARS	ACCELERATION RESPONSE SPECTRUM
AS	AGGREGATE SUBBASE
ASP	ALTERNATIVE SLOTTED PIPE
ASRP	ALUMINUM SPIRAL RIB PIPE
Assy	ASSEMBLY
ATPB	ASPHALT TREATED PERMEABLE BASE
ATPM	ASPHALT TREATED PERMEABLE MATERIAL
Ave	AVENUE
Avg	AVERAGE
@	AT

B

BAGR	BRIDGE APPROACH GUARD RAILING
BB	BEGINNING OF BRIDGE
B-B	BACK-TO-BACK
BC	BEGIN HORIZONTAL CURVE
BCR	BEGIN CURB RETURN
Beg	BEGIN
Blt Ctd	BITUMINOUS COATED
Bk	BACK
Bkf	BACKFILL
Bldg	BUILDING
BLM	BRIDGE-LOG MILE
Blvd	BOULEVARD
BM	BENCH MARK
BMP	BEST MANAGEMENT PRACTICE
Bot	BOTTOM
Br	BRIDGE
Brg	BEARING
BTU	BRITISH THERMAL UNIT
BVC	BEGIN VERTICAL CURVE
BW	BARBED WIRE

C

CAA	CABLE ANCHOR ASSEMBLY
CAP	CORRUGATED ALUMINUM PIPE
CAPA	CORRUGATED ALUMINUM PIPE ARCH
CAS	CONSTRUCTION AREA SIGN
CB	CONCRETE BARRIER
CBW	CONCRETE BLOCK WALL
C-C	CENTER TO CENTER

C continued

CG	CENTER OF GRAVITY
Chnl	CHANNEL
CI	CAST IRON
CIDH	CAST-IN-DRILLED-HOLE
CIP	CAST-IN-PLACE, CAST IRON PIPE
CIPCP	CAST IN PLACE CONCRETE PIPE
CISS	CAST-IN-STEEL-SHELL
CJP	COMPLETE JOINT PENETRATION
CL	CHAIN LINK
CL-6	CHAIN LINK FENCE (6 FT)
Cl	CLASS
Clr	CLEAR, CLEARANCE
CM	CORRUGATED METAL
CMP	CORRUGATED METAL PIPE
CMS	CHANGEABLE MESSAGE SIGN
Co	COUNTY
Col	COLUMN
Conc	CONCRETE
Cond	CONDUIT
Conn	CONNECTOR
Const	CONSTRUCT, CONSTRUCTION
Cont	CONTINUOUS
Coord	COORDINATE
CP	CANDLEPOWER, CATCH POINT
Cr	CREEK
CRCP	CONTINUOUSLY REINFORCED CONCRETE PAVEMENT
CRSP	CONCRETED ROCK SLOPE PROTECTION
CSP	CORRUGATED STEEL PIPE
CSPA	CORRUGATED STEEL PIPE ARCH
Ct	COURT
CTB	CEMENT TREATED BASE
CTPB	CEMENT TREATED PERMEABLE BASE
CTPM	CEMENT TREATED PERMEABLE MATERIAL
Ctrs	CENTERS
Culv	CULVERT
℄	CENTERLINE

D

D	DEPTH
DD	DOWNDRAIN
Dbl	DOUBLE
Deg	DEGREE
Del	DELINEATOR
Det	DETAIL, DETOUR
DF	DOUGLAS FIR
DI	DRAINAGE INLET, DROP INLET
DIP	DUCTILE IRON PIPE
Dia	DIAMETER
Diaph	DIAPHRAGM
Dist	DISTANCE, DISTRICT
DMBB	DOUBLE METAL BEAM BARRIER
Dr	DRIVE
DTBB	DOUBLE THRIE BEAM BARRIER
Dwy	DRIVEWAY

E

E	EAST
Ease	EASEMENT
EB	END OF BRIDGE, EASTBOUND
EC	END HORIZONTAL CURVE
ECR	END CURB RETURN
ED	EDGE DRAIN
EDC	EDGE DRAIN CLEANOUT
EDO	EDGE DRAIN OUTLET
EDV	EDGE DRAIN VENT
Elec	ELECTROLIER
Elect	ELECTRIC
Elev	ELEVATION
Emb	EMBANKMENT
Engr	ENGINEER
EOD	EDGE OF DECK
EP	EDGE OF PAVEMENT
Eq	EQUATION
ERS	EARTH RETAINING STRUCTURE
ES	EDGE OF SHOULDER
ESA	ENVIRONMENTALLY SENSITIVE AREA
ETW	EDGE OF TRAVELED WAY
EVC	END VERTICAL CURVE
EW	ENDWALL
Exc	EXCAVATION
Exist	EXISTING
Exp	EXPANSION, EXPRESSWAY
Exp Jt	EXPANSION JOINT
Ext	EXTERIOR

F

F & C	FRAME AND COVER
F & G	FRAME AND GRATE
FB	FLOOR BEAM
Fdn	FOUNDATION
FEBT	FACING EASTBOUND TRAFFIC
FES	FLARED END SECTION
FF	FILTER FABRIC
FG	FINISHED GRADE
FH	FIRE HYDRANT
Fig	FIGURE
FL	FLOW LINE
FNBT	FACING NORTHBOUND TRAFFIC
FOB	FREE ON BOARD
FOC	FACE OF CONCRETE
Fr Rd	FRONTAGE ROAD
FS	FAR SIDE, FINISHED SURFACE
FSBT	FACING SOUTHBOUND TRAFFIC
Ftg	FOOTING
FWBT	FACING WESTBOUND TRAFFIC
Fwy	FREEWAY

G

g	ACCELERATION DUE TO GRAVITY
Ga	GAUGE
Galv	GALVANIZED
GP	GRADING PLANE
GR	GUARD RAILING
GSP	GALVANIZED STEEL PIPE

G continued

Gtr	GUTTER

H

H	HEIGHT
h, hr	HOUR
HD	HORIZONTAL DRAIN
HDPE	HIGH DENSITY POLYETHYLENE
hdwl	HEADWALL
Hex Hd	HEXAGONAL HEAD
HMA	HOT MIX ASPHALT
Horiz	HORIZONTAL
HOV	HIGH OCCUPANCY VEHICLE
HP	HINGE POINT, HORSEPOWER
HPS	HIGH PERFORMANCE STEEL
HS	HIGH STRENGTH
HSS	HOLLOW STRUCTURAL SECTION
HW	HEADWALL, HIGH WATER
HWM	HIGH WATER MARK
Hwy	HIGHWAY

I

IB	IMPORTED BORROW
ID	INSIDE DIAMETER
IF	INSIDE FACE
Int	INTERIOR
Inv	INVERT
Irr	IRRIGATION

J

Jct	JUNCTION
JP	JOINT POLE
JPCP	JOINTED PLAIN CONCRETE PAVEMENT
JS	JUNCTION STRUCTURE
Jt	JOINT

K

L

L	LENGTH, ANGLE (STRUCTURAL STEEL SHAPE)
Lat	LATITUDE
LCB	LEAN CONCRETE BASE
Ln	LANE
Loc	LOCATION
LOL	LAYOUT LINE
Long	LONGITUDE
Longit	LONGITUDINAL
LS	LUMP SUM
Lt	LEFT

Dist	COUNTY	ROUTE	POST MILES TOTAL PROJECT	SHEET No.	TOTAL SHEETS

REGISTERED CIVIL ENGINEER

May 20, 2011
PLANS APPROVAL DATE

Jeffrey C. Kegley
REGISTERED PROFESSIONAL ENGINEER
Jeffrey C. Kegley
53561
Exp. 12-31-12
CIVIL
STATE OF CALIFORNIA

THE STATE OF CALIFORNIA OR ITS OFFICERS OR AGENTS SHALL NOT BE RESPONSIBLE FOR THE ACCURACY OR COMPLETENESS OF SCANNED COPIES OF THIS PLAN SHEET.

GENERAL RULES:

1. Words are preferred over abbreviations and acronyms.
2. Use words in notes, except where space is limited on the plan sheet.
3. Do not use abbreviations or acronyms where the meaning may be in doubt.
4. Abbreviations and acronyms may be used in callouts, dimensions, and tables.
5. Use upper and lower case letters for abbreviation of a single word. e.g., Misc = miscellaneous and Blt Ctd = bituminous coated
6. Use all upper case letters for acronyms. e.g., BCR = begin curb return

UNIT OF MEASUREMENT SYMBOLS:

1. Symbols for measurement units are not part of abbreviations nor acronyms. The above abbreviation and acronym general rules do not apply to symbols.
2. See Tables A and B on Standard Plan A10B.

NOTES:

1. For Landscape and Erosion Control plan abbreviations, see Standard Plan H1.
2. For Bridge plan abbreviations, see Standard Plan B0-1.
3. For Electrical System plan abbreviations, see Standard Plans ES-1A, ES-1B and ES-1C.

STATE OF CALIFORNIA
DEPARTMENT OF TRANSPORTATION

ABBREVIATIONS (SHEET 1 OF 2)

NO SCALE

A10A

2010 STANDARD PLAN A10A

M

Maint	MAINTENANCE
Max	MAXIMUM
MB	METAL BEAM
MBB	METAL BEAM BARRIER
MBGR	METAL BEAM GUARD RAILING
Med	MEDIAN
MH	MANHOLE
Min	MINIMUM
Misc	MISCELLANEOUS
Misc I & S	MISCELLANEOUS IRON AND STEEL
Mkr	MARKER
Mod	MODIFIED, MODIFY
Mon	MONUMENT
MP	METAL PLATE
MPGR	METAL PLATE GUARD RAILING
MR	MOVEMENT RATING
MSE	MECHANICALLY STABILIZED EMBANKMENT
Mt	MOUNTAIN, MOUNT
Mtl	MATERIAL
MVP	MAINTENANCE VEHICLE PULLOUT

N

N	NORTH
NB	NORTHBOUND
No.	NUMBER (MUST HAVE PERIOD)
Nos.	NUMBERS (MUST HAVE PERIOD)
NPS	NOMINAL PIPE SIZE
NS	NEAR SIDE
NSP	NEW STANDARD PLAN
NTS	NOT TO SCALE

O

Oblit	OBLITERATE
OC	OVERCROSSING
OD	OUTSIDE DIAMETER
OF	OUTSIDE FACE
OG	ORIGINAL GROUND
OGAC	OPEN GRADED ASPHALT CONCRETE
OGFC	OPEN GRADED FRICTION COURSE
OH	OVERHEAD
OHWM	ORDINARY HIGH WATER MARK
O-O	OUT TO OUT
Opp	OPPOSITE
OSD	OVERSIDE DRAIN

P

p	PAGE
PAP	PERFORATED ALUMINUM PIPE
PB	PULL BOX
PC	POINT OF CURVATURE, PRECAST
PCC	POINT OF COMPOUND CURVE, PORTLAND CEMENT CONCRETE
PCMS	PORTABLE CHANGEABLE MESSAGE SIGN
PCP	PERFORATED CONCRETE PIPE, PRESTRESSED CONCRETE PIPE
PCVC	POINT OF COMPOUND VERTICAL CURVE
PEC	PERMIT TO ENTER AND CONSTRUCT
Ped	PEDESTRIAN
Ped OC	PEDESTRIAN OVERCROSSING
Ped UC	PEDESTRIAN UNDERCROSSING
Perm Mtl	PERMEABLE MATERIAL

P continued

PG	PROFILE GRADE
PI	POINT OF INTERSECTION
PJP	PARTIAL JOINT PENETRATION
Pkwy	PARKWAY
℄PL	PLATE
P/L	PROPERTY LINE
PM	POST MILE, TIME FROM NOON TO MIDNIGHT
PN	PAVING NOTCH
POC	POINT OF HORIZONTAL CURVE
POT	POINT OF TANGENT
POVC	POINT OF VERTICAL CURVE
PP	PIPE PILE, PLASTIC PIPE, POWER POLE
PPL	PREFORMED PERMEABLE LINER
PPP	PERFORATED PLASTIC PIPE
PRC	POINT OF REVERSE CURVE
PRF	PAVEMENT REINFORCING FABRIC
PRVC	POINT OF REVERSE VERTICAL CURVE
PS&E	PLANS, SPECIFICATIONS AND ESTIMATES
PS, P/S	PRESTRESSED
PSP	PERFORATED STEEL PIPE
PT	POINT OF TANGENCY
PVC	POLYVINYL CHLORIDE
Pvmt	PAVEMENT

Q

Qty	QUANTITY

R

R	RADIUS
R & D	REMOVE AND DISPOSE
R & S	REMOVE AND SALVAGE
R/C	RATE OF CHANGE
RCA	REINFORCED CONCRETE ARCH
RCB	REINFORCED CONCRETE BOX
RCP	REINFORCED CONCRETE PIPE
RCPA	REINFORCED CONCRETE PIPE ARCH
Rd	ROAD
Reinf	REINFORCED, REINFORCEMENT, REINFORCING
Rel	RELOCATE
Repl	REPLACEMENT
Ret	RETAINING
Rev	REVISED, REVISION
Rdwy	ROADWAY
RHMA	RUBBERIZED HOT MIX ASPHALT
Riv	RIVER
RM	ROAD-MIXED
RP	RADIUS POINT, REFERENCE POINT
RR	RAILROAD
RSP	ROCK SLOPE PROTECTION, REVISED STANDARD PLAN
Rt	RIGHT
Rte	ROUTE
RW	REDWOOD, RETAINING WALL
R/W	RIGHT OF WAY
Rwy	RAILWAY

S

S	SOUTH, SUPPLEMENT
SAE	STRUCTURE APPROACH EMBANKMENT
Salv	SALVAGE
SAPP	STRUCTURAL ALUMINUM PLATE PIPE
SB	SOUTHBOUND
SC	SAND CUSHION
SCSP	SLOTTED CORRUGATED STEEL PIPE
SD	STORM DRAIN
Sec	SECOND, SECTION
Sep	SEPARATION
SG	SUBGRADE
Shld	SHOULDER
Sht	SHEET
Sim	SIMILAR
℄	STATION LINE
SM	SELECTED MATERIAL
Spec	SPECIAL, SPECIFICATIONS
SPP	SLOTTED PLASTIC PIPE
SS	SLOPE STAKE
SSBM	STRAP AND SADDLE BRACKET METHOD
SSD	STRUCTURAL SECTION DRAIN
SSPA	STRUCTURAL STEEL PLATE ARCH
SSPP	STRUCTURAL STEEL PLATE PIPE
SSPPA	STRUCTURAL STEEL PLATE PIPE ARCH
SSRP	STEEL SPIRAL RIB PIPE
St	STREET
Sta	STATION
STBB	SINGLE THRIE BEAM BARRIER
Std	STANDARD
Str	STRUCTURE
Surf	SURFACING
SW	SIDEWALK, SOUND WALL
Swr	SEWER
Sym	SYMMETRICAL
S4S	SURFACE 4 SIDES

T

T	SEMI-TANGENT
Tan	TANGENT
TBB	THRIE BEAM BARRIER
Tbr	TIMBER
TC	TOP OF CURB
TCB	TRAFFIC CONTROL BOX
TCE	TEMPORARY CONSTRUCTION EASEMENT
Tel	TELEPHONE
Temp	TEMPORARY
TG	TOP OF GRADE
Tot	TOTAL
TP	TELEPHONE POLE
TPB	TREATED PERMEABLE BASE
TPM	TREATED PERMEABLE MATERIAL
Trans	TRANSITION

T continued

TS	TRANSVERSE, TRAFFIC SIGNAL, TUBULAR STEEL
Typ	TYPICAL

U

UC	UNDERCROSSING
UD	UNDERDRAIN
UG	UNDERGROUND
UON	UNLESS OTHERWISE NOTED
UP	UNDERPASS

V

V	VALVE, DESIGN SPEED
Var	VARIABLE, VARIES
VC	VERTICAL CURVE
VCP	VITRIFIED CLAY PIPE
Vert	VERTICAL
Via	VIADUCT
Vol	VOLUME

W

W	WEST, WIDTH
WB	WESTBOUND
WH	WEEP HOLE
WM	WIRE MESH
WS	WATER SURFACE
WSP	WELDED STEEL PIPE
Wt	WEIGHT
WV	WATER VALVE
WW	WINGWALL
WWLOL	WINGWALL LAYOUT LINE

X

X Sec	CROSS SECTION
Xing	CROSSING

Y

Yr	YEAR
Yrs	YEARS

Dist	COUNTY	ROUTE	POST MILES TOTAL PROJECT	SHEET No.	TOTAL SHEETS

REGISTERED CIVIL ENGINEER

May 20, 2011
PLANS APPROVAL DATE

Jeffrey C. Kegley
REGISTERED PROFESSIONAL ENGINEER
Jeffrey C. Kegley
53561
Exp. 12-31-12
CIVIL
STATE OF CALIFORNIA

THE STATE OF CALIFORNIA OR ITS OFFICERS OR AGENTS SHALL NOT BE RESPONSIBLE FOR THE ACCURACY OR COMPLETENESS OF SCANNED COPIES OF THIS PLAN SHEET.

UNIT OF MEASUREMENT SYMBOLS:

Some of the symbols used in the project plan quantity tables and in the Bid Item List are:

TABLE A

SYMBOL USED	DEFINITIONS
ACRE	ACRE
CF	CUBIC FOOT
CY	CUBIC YARD
EA	EACH
GAL	GALLON
LB	POUND
LF	LINEAR FOOT
SQFT	SQUARE FOOT
SQYD	SQUARE YARD
STA	100 FEET
TAB	TABLET
TON	2,000 POUNDS

Some of the symbols used in the plans other than in the project plan quantity tables are:

TABLE B

SYMBOL USED	DEFINITIONS
ksi	KIPS PER SQUARE INCH
ksf	KIPS PER SQUARE FOOT
psi	POUNDS PER SQUARE INCH
psf	POUNDS PER SQUARE FOOT
lb/yt³, pcf	POUNDS PER CUBIC FOOT
tsf	TONS PER SQUARE FOOT
mph, MPH *	MILES PER HOUR
ø	NOMINAL DIAMETER
oz	OUNCE
lb	POUND
klp	1,000 POUNDS
cal	CALORIE
ft	FOOT OR FEET
gal	GALLON

* For use on a sign panel only

STATE OF CALIFORNIA
DEPARTMENT OF TRANSPORTATION

ABBREVIATIONS (SHEET 2 OF 2)

NO SCALE

A10B

2010 STANDARD PLAN A10B

SYMBOLOGY FOR DESIGN FEATURES

"A" LINE — 9 260 1 — ALIGNMENT LINE (STATION LINE)

R/W — RIGHT OF WAY LINE

TOE OF SLOPE, C F, TOP OF CUT — CATCH LINE FOR CUT AND FILL SLOPES

OG — ORIGINAL GROUND LINE

BB 217+93.45, EB 222+06.38, AERIAL EASEMENT, APPROACH SLAB (SEE STRUCTURE PLANS), BRIDGE NAME (SEE STRUCTURE PLANS) — STRUCTURE (BRIDGE)

HMA DIKE, HMA OVERSIDE DRAIN, DOWNDRAIN — DIKE, DOWNDRAIN AND OVERSIDE DRAIN

PIPE INLET, DRAINAGE INLET, FLARED END SECTION — PIPE CULVERT - SINGLE LINE (36" OR LESS IN DIAMETER) (PLUS - OTHER DRAINAGE FEATURES)

WINGWALL, HEADWALL, ENDWALL — PIPE CULVERT - TWO LINES (GREATER THAN 36" TO 6' IN DIAMETER PLUS - OTHER DRAINAGE FEATURES) (OVER 6' IN DIAMETER, DRAW TO SCALE)

FACE OF WALL — WALL

WALL ON BARRIER

WALL ON RETAINING WALL

CONCRETE (MEDIAN) BARRIER

NEW GUARD RAILING

DOUBLE THRIE BEAM BARRIER

TEMPORARY RAILING (TYPE K)

CURB — CURB WITHOUT GUTTER

CURB WITH GUTTER (CURB-LIP, FLOW LINE, BACK-TOP OF CURB)

FENCE

EXISTING WALL - USE ONLY WHEN WORK IS TO BE PERFORMED ON EXISTING WALL (DO NOT DROP OUT)

EXISTING GUARD RAILING - USE ONLY WHEN WORK IS TO BE PERFORMED ON EXISTING RAILING (DO NOT DROP OUT)

EXISTING CONCRETE BARRIER - USE ONLY WHEN WORK IS TO BE PERFORMED ON EXISTING BARRIER (DO NOT DROP OUT)

DITCH FLOW LINE

SOLID TRAFFIC LINE

BROKEN TRAFFIC LINE

MATCH LINE

BREAK LINE

WHEELCHAIR RAMP

ROADSIDE SIGN - ONE POST, TWO POSTS (EMBEDDED)

ROADSIDE SIGN - ATTACHED TO ELECTROLIER, SIGNAL STANDARD, SIGN STRUCTURE POST OR BARRIER

DIRECTION OF TRAFFIC (ARROWS ARE TO BE HOLLOW)

PAVEMENT MARKING ARROWS (ARROWS ARE TO BE HATCHED)

SYMBOL FOR ROADSIDE SIGN NUMBER

SYMBOL FOR TRAFFIC LINE DETAIL

WATER POLLUTION CONTROL/EROSION CONTROL

TFESA — Temp FENCE FOR ESA

TSF — Temp SILT FENCE

TFR — Temp FIBER ROLL

TGBB — Temp GRAVEL BAG BARRIER

TSBB — Temp STRAW BALE BARRIER

Temp SLOPE DRAIN FLEX PIPE

Temp EARTH BERM

Temp DITCH/SWALE

FR — FIBER ROLL

WASH — Temp CONCRETE WASHOUT

Temp DRAIN INLET PROTECTION

Temp DRAIN OUTLET PROTECTION

Temp CHECK DAM

Temp CONSTRUCTION ENTRANCE

SP — Temp STOCKPILE

Dist	COUNTY	ROUTE	POST MILES TOTAL PROJECT	SHEET No.	TOTAL SHEETS

REGISTERED CIVIL ENGINEER

May 20, 2011
PLANS APPROVAL DATE

Jeffrey C. Kegley
REGISTERED PROFESSIONAL ENGINEER
Jeffrey C. Kegley
53561
Exp. 6-30-11
CIVIL
STATE OF CALIFORNIA

THE STATE OF CALIFORNIA OR ITS OFFICERS OR AGENTS SHALL NOT BE RESPONSIBLE FOR THE ACCURACY OR COMPLETENESS OF SCANNED COPIES OF THIS PLAN SHEET.

STATE OF CALIFORNIA
DEPARTMENT OF TRANSPORTATION

LINES AND SYMBOLS (SHEET 1 OF 3)

NO SCALE

A10C

2010 STANDARD PLAN A10C

SUBSURFACE FACILITIES

W	NEW WATER
w	Exist WATER
G	NEW NATURAL GAS
g	Exist NATURAL GAS
S	NEW SEWER
s	Exist SEWER
E	NEW ELECTRICAL
e	Exist ELECTRICAL
T	NEW TELEPHONE
t	Exist TELEPHONE
GS	NEW GASOLINE
gs	Exist GASOLINE
O	NEW OIL
o	Exist OIL
TV	NEW TELEVISION
tv	Exist TELEVISION
ST	NEW STEAM
st	Exist STEAM
TC	NEW TELEMETER CABLE
tc	Exist TELEMETER CABLE
SD	NEW STORM DRAIN
sd	Exist STORM DRAIN
FO	NEW FIBER OPTIC
fo	Exist FIBER OPTIC
JT	NEW JOINT TRENCH
jt	Exist JOINT TRENCH

OVERHEAD FACILITIES

E (OH) E	NEW ELECTRICAL
e (oh) e	Exist ELECTRICAL
TC (OH) TC	NEW TELEMETER CABLE
tc (oh) tc	Exist TELEMETER CABLE
T (OH) T	NEW TELEPHONE
t (oh) t	Exist TELEPHONE
TV (OH) TV	NEW TELEVISION
tv (oh) tv	Exist TELEVISION
FO (OH) FO	NEW FIBER OPTIC
fo (oh) fo	Exist FIBER OPTIC
JT (OH) JT	NEW JOINT OVERHEAD
jt (oh) jt	Exist JOINT OVERHEAD

SHOWING THE RELOCATION OF EXISTING FACILITIES TO THE NEW LOCATION

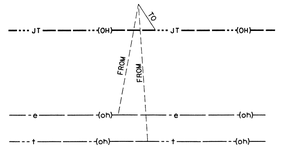

ABANDONED FACILITY

t // t // t

NOTE:

IDENTIFY (LABEL) THE OWNER OF EACH FACILITY PLUS THE SIZE, PRESSURE AND VOLTAGE (IF APPLICABLE) FOR ALL FACILITIES (WHETHER PART OF A JOINT OVERHEAD, JOINT TRENCH OR SOLO INSTALLATION).

THE TYPE OF FACILITY IS IDENTIFIED BY THE SYMBOLOGY OF THE LINE STYLE CHOSEN (SEE LINE STYLES ON THIS STANDARD PLAN SHEET).

JOINT OVERHEAD/TRENCH

jt (oh) jt (oh)

ELECTRIC COMPANY (VOLTAGE)
TELEPHONE COMPANY (NUMBER OF DUCTS)
COMMUNICATIONS COMPANY (NUMBER OF DUCTS)

JT JT JT JT

GAS COMPANY (SIZE & PRESSURE)
WATER COMPANY (SIZE & PRESSURE IF APPLICABLE)
SEWER COMPANY (SIZE)

WHEN USING THE JOINT OVERHEAD OR JOINT TRENCH SYMBOLOGY (SEE THE CALTRANS LINE STYLES ON THIS PAGE), USE A BRACKET TO GROUP AND LABEL ALL THE FACILITIES ASSOCIATED WITH THE JOINT OVERHEAD OR TRENCH (SEE THE EXAMPLES ABOVE).

SOLO FACILITY

o — OIL COMPANY (SIZE & PRESSURE)

G — NATURAL GAS COMPANY (SIZE & PRESSURE)

Dist	COUNTY	ROUTE	POST MILES TOTAL PROJECT	SHEET No.	TOTAL SHEETS

REGISTERED CIVIL ENGINEER

May 20, 2011
PLANS APPROVAL DATE

Jeffrey C. Kegley
REGISTERED PROFESSIONAL ENGINEER
Jeffrey C. Kegley
53561
Exp. 6-30-11
CIVIL
STATE OF CALIFORNIA

THE STATE OF CALIFORNIA OR ITS OFFICERS OR AGENTS SHALL NOT BE RESPONSIBLE FOR THE ACCURACY OR COMPLETENESS OF SCANNED COPIES OF THIS PLAN SHEET.

STATE OF CALIFORNIA
DEPARTMENT OF TRANSPORTATION

LINES AND SYMBOLS (SHEET 2 OF 3)

NO SCALE

A10D

2010 STANDARD PLAN A10D

AS-BUILT

COUNTY OF ORANGE CALIFORNIA

MARK	DESCRIPTION	DATE	APPR.

PREPARED UNDER THE RESPONSIBLE CHARGE OF:

REGISTERED PROFESSIONAL ENGINEER — QUOC TRUNG NGUYEN — No. C71743 — Exp. 12/31/13 — CIVIL — STATE OF CALIFORNIA

Q. NGUYEN
RCE C 71743 (EXP.12-31-13)
JULY 16, 2013
DATE

DESIGNED BY: QN
CHECKED BY: GR
DRAWN BY: NL
DRAWING CODE:
JOB NO. 11017
PLOT DATE: 09/01/2016
SCALE: AS SHOWN

COUNTY OF ORANGE
OC PUBLIC WORKS

TEMA Engineers
10370 HEMET STREET, Suite 230
RIVERSIDE, CA 92505
Tel: (951) 687-1005

LA PATA AVENUE GAP CLOSURE
BRIDGE NO. 4

CALTRANS STANDARD PLANS NO. 1

Sheet Reference Number

S4-21

282 OF 492

W:\11017 La Pata Ave Gap Closure\Construction Supports\As-Builts\Bridge No. 4\20160831\S4-21_25 Standard Plan.dwg, Layout: S4-21 – Caltrans Standard Plans No.1, Aug 24 2016 3:12pm

PHOTOGRAMMETRIC MAPPING LINES AND SYMBOLS

PHOTOGRAMMETRIC MAPPING IS DROPPED OUT ON FINAL CONTRACT PLANS

- CURB
- LANE STRIPE
- EDGE OF TRAVELED WAY (STATE HIGHWAY)
- EDGE OF TRAVELED WAY (OTHER)
- EDGE OF ASPHALT (SHOULDER)
- CONCRETE
- GUARD RAILING
- MEDIAN BARRIER
- FENCE
- MASONRY WALL
- MASONRY WALL AND FENCE
- RETAINING WALL
- RETAINING WALL AND FENCE
- RETAINING WALL AND MASONRY WALL
- FLOWLINE (NATURAL AND MANMADE)
- 73.9 — EDGE OF BODY OF WATER, SURFACE HATCHED AND SPOT ELEVATION ON SURFACE
- DECK — DECK, BUILDING, COVERED PORCH OR PARKING
- DP, R — DIRT PILE, ROCK
- POOL, P, SPA, S — POOL, SPA
- TREES, BRUSH, OR VEGETATION OVER ½ CONTOUR INTERVAL IN HEIGHT
- VINEYARD ROW
- CATTLE GUARD
- OVERHEAD SIGN - SINGLE POST
- OVERHEAD SIGN - TWO POST
- TRAIL
- DIRT, DIRT ROAD

SYMBOLS ENLARGED FOR CLARITY

- LEFT TURN LANE ARROW
- HOV LANE (HIGH OCCUPANCY VEHICLE)
- DROP INLET, ROUND DROP INLET
- MANHOLE
- FIRE HYDRANT
- VC, SP, WELL, UB, RS — VALVE COVER, STAND PIPE, WELL, UTILITY BOX, RAILROAD CROSSING STANDARD
- UTILITY POLE, POLE AND WIRES, POLE WITH WIRES AND ANCHOR
- TRANSMISSION TOWER
- ELECTROLIER, ELECTROLIER ON POLE
- TS, RS — TRAFFIC SIGNAL, RAILROAD SIGNAL
- CALL BOX
- SIGNS - SINGLE POST, TWO POSTS
- P — SINGLE TREE, PALM
- MARSH OR SWAMP
- CC — CRASH CUSHION
- TANK, T — TANK

TOPOGRAPHY

- 180 — INDEX CONTOUR
- INTERMEDIATE CONTOURS
- 170 — INDEX CONTOUR (SCALE 1"=50')
- GNV CONTOUR (GROUND NOT VISIBLE)
- DEPRESSION CONTOUR
- GNV DEPRESSION CONTOUR
- 657.2 — SPOT ELEVATION (AT DECIMAL POINT)

ENVIRONMENTALLY SENSITIVE AREA (ESA)

ESA

RAILROAD

- SCALE 1"=100'
- SCALE 1"=50', 1"=20'

BOUNDARY LINE

- STATE OR COUNTRY
- COUNTY OR RESERVATION BOUNDARY
- CITY OR MILITARY BOUNDARY
- FOREST
- SUBDIVISION, SECTION, GRANT
- RANCHO

CONTROL POINTS

- HORIZONTAL AND VERTICAL CONTROL POINT
- HORIZONTAL CONTROL POINT
- VERTICAL CONTROL POINT

WATER WAYS

- RIVERS, STREAMS AND CREEKS - SMALL (ONE LINE)
- RIVERS, STREAMS AND CREEKS - LARGE (TWO LINES) (WHICH DEFINES THE WATER EDGE)
- Land / Ocean — OCEAN - (GRADUATED LINE WEIGHTS)
- WATER EDGE, LAKE, POND, SWAMP

DRAINAGE

- DIRECTION FLOW OF WATER
- DRAINAGE SYSTEM SYMBOL
- DRAINAGE UNIT SYMBOL

DIst	COUNTY	ROUTE	POST MILES TOTAL PROJECT	SHEET No.	TOTAL SHEETS

REGISTERED CIVIL ENGINEER — Jeffrey C. Kegley
May 20, 2011
PLANS APPROVAL DATE
REGISTERED PROFESSIONAL ENGINEER — Jeff C. Kegley No. 53561 Exp. 6-30-11 CIVIL — STATE OF CALIFORNIA
THE STATE OF CALIFORNIA OR ITS OFFICERS OR AGENTS SHALL NOT BE RESPONSIBLE FOR THE ACCURACY OR COMPLETENESS OF SCANNED COPIES OF THIS PLAN SHEET.

STATE OF CALIFORNIA
DEPARTMENT OF TRANSPORTATION

LINES AND SYMBOLS (SHEET 3 OF 3)

NO SCALE

A10E

2010 STANDARD PLAN A10E

ELEVATION

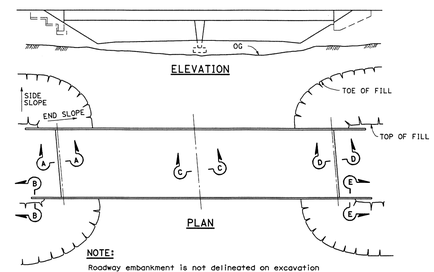

PLAN

NOTE:
Roadway embankment is not delineated on excavation drawings for clarity. Embankment must be in place before structure excavation is made.

IN FILL

ELEVATION

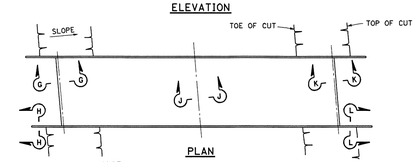

PLAN

NOTE:
If no roadway excavation is involved at bridge, structure excavation is measured from original ground.

IN CUT

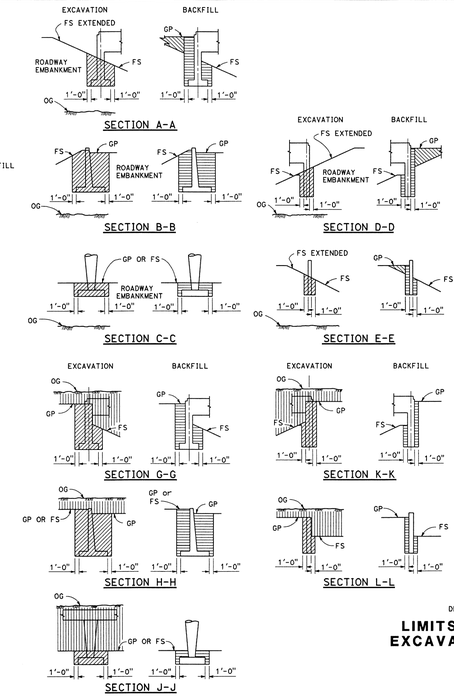

LEGEND
- STRUCTURE EXCAVATION
- STRUCTURE BACKFILL
- ROADWAY EXCAVATION
- ROADWAY EMBANKMENT

DIst	COUNTY	ROUTE	POST MILES TOTAL PROJECT	SHEET No.	TOTAL SHEETS

REGISTERED CIVIL ENGINEER — Gary Wong
May 20, 2011
PLANS APPROVAL DATE
REGISTERED PROFESSIONAL ENGINEER — Gary Wong No. C58298 Exp. 6-30-12 CIVIL — STATE OF CALIFORNIA
THE STATE OF CALIFORNIA OR ITS OFFICERS OR AGENTS SHALL NOT BE RESPONSIBLE FOR THE ACCURACY OR COMPLETENESS OF SCANNED COPIES OF THIS PLAN SHEET.

STATE OF CALIFORNIA
DEPARTMENT OF TRANSPORTATION

LIMITS OF PAYMENT FOR EXCAVATION AND BACKFILL BRIDGE

NO SCALE

A62C

2010 STANDARD PLAN A62C

BRIDGE PLAN ABBREVIATIONS

See Standard Plans A10A and A10B for additional abbreviations

Brg	Bearing
CG	Center of gravity
CIP	Cast-in-place
Cont	Continuous
FS	For side
IF	Inside face
NS	Near side
OF	Outside face
J	Outer, outer left bridge
K	Outer left bridge
S	Outer right bridge
T	Outer, outer right bridge
T&B	Top and bottom

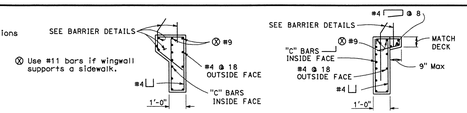

SECTION J-J
Without overhang

SECTION J-J
With overhang

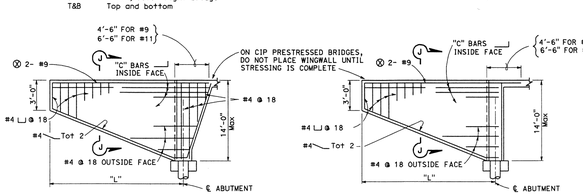

ELEVATION
SLOPING ABUTMENT

ELEVATION
VERTICAL ABUTMENT

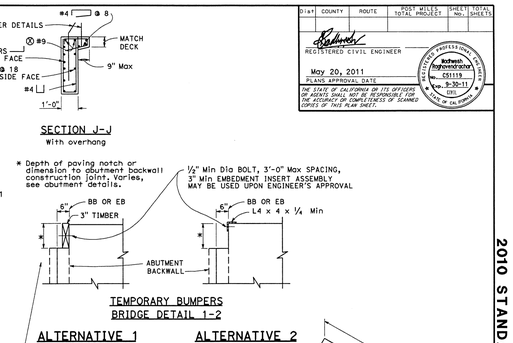

TEMPORARY BUMPERS
BRIDGE DETAIL 1-2

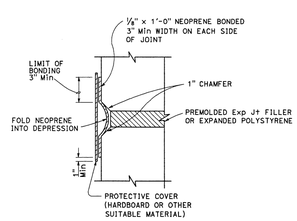

BRIDGE DETAIL 1-3
STRIP WATERSTOP DETAIL

When used on CIP prestressed bridges, do not apply waterstop until stressing is complete.

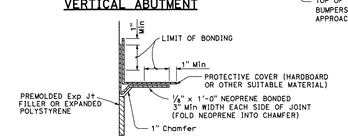

BRIDGE DETAIL 1-4
STRIP WATERSTOP CORNER DETAIL

When used on CIP prestressed bridges, do not apply waterstop until stressing is complete.

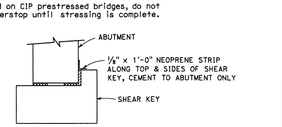

BRIDGE DETAIL 1-6
SHEAR KEY JOINT PROTECTION

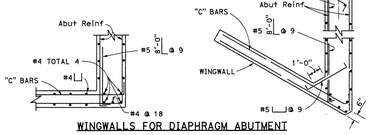

WINGWALLS FOR DIAPHRAGM ABUTMENT
BRIDGE DETAIL 1-5

CORNER DETAIL FOR SKEW 20° AND LESS

CORNER DETAIL FOR SKEW OVER 20°

"L"	"C" BARS
12'-0"	#5 @ 9"
14'-0"	#6 @ 9"
16'-0"	#7 @ 9"
18'-0"	#8 @ 9"
20'-0"	#9 @ 9"

DIst	COUNTY	ROUTE	POST MILES TOTAL PROJECT	SHEET No.	TOTAL SHEETS

REGISTERED CIVIL ENGINEER — Rathwell
May 20, 2011
PLANS APPROVAL DATE
REGISTERED PROFESSIONAL ENGINEER — Rod Rathwell Exp. 9-30-11 CIVIL — STATE OF CALIFORNIA
THE STATE OF CALIFORNIA OR ITS OFFICERS OR AGENTS SHALL NOT BE RESPONSIBLE FOR THE ACCURACY OR COMPLETENESS OF SCANNED COPIES OF THIS PLAN SHEET.

STATE OF CALIFORNIA
DEPARTMENT OF TRANSPORTATION

BRIDGE DETAILS

NO SCALE

B0-1

2010 STANDARD PLAN B0-1

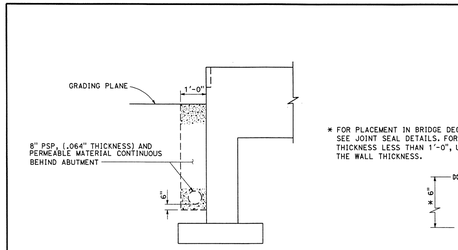

BRIDGE DETAIL 3-5
8" PSP AND PERMEABLE MATERIAL

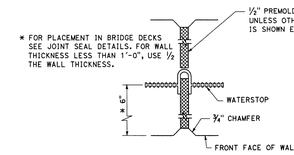

BRIDGE DETAIL 3-4
WALL EXPANSION JOINT

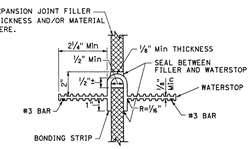

BRIDGE DETAIL 3-6
WATERSTOP

NOTES:
Holes will be permitted in the outer ½" of the web for wire, rings, etc. Tie web to #3 reinforcing bars @ 12 maximum intervals to support the waterstop in proper position during concrete placement. Alternative detail may be submitted for approval of the Engineer.

Waterstop to have 5 or more pairs of of raised ribs to provide 0.1 square inches minimum rib cross-section area on each half of the waterstop.

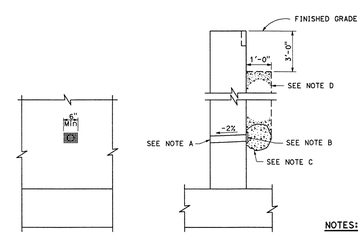

ELEVATION SECTION
BRIDGE DETAIL 3-1
WEEP HOLE AND PERVIOUS BACKFILL

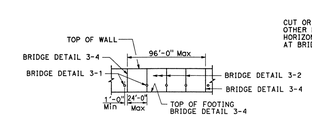

BRIDGE DETAIL 3-3
WALL EXPANSION JOINTS AND WEAKENED PLANES

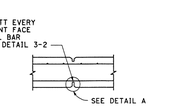

SECTION

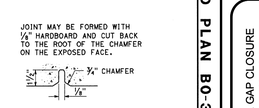

DETAIL A

BRIDGE DETAIL 3-2
WEAKENED PLANES

NOTES:
A. 4" ø Drains @ 25'-0" maximum center to center, 9'-0" center to center for Type 3 and 9'-3" center to center for Type 4 retaining walls. For walls adjacent to sidewalks or curbs, provide 4" plastic pipe under the sidewalk to discharge thru curb face. Exposed wall drains shall be located 3"± above finished grade.
B. 6" square aluminum or galvanized steel wire ¼" mesh hardware cloth, minimum wire diameter 0.025". Anchor firmly to backface.
C. One cubic foot pervious backfill material in a nonwoven filter fabric, securely tied.
D. Pervious backfill material continuous behind retaining wall or abutment.

STATE OF CALIFORNIA
DEPARTMENT OF TRANSPORTATION

BRIDGE DETAILS

NO SCALE

B0-3

2010 STANDARD PLAN B0-3

AS-BUILT

COUNTY OF ORANGE CALIFORNIA

MARK	DESCRIPTION	DATE	APPR.

PREPARED UNDER THE RESPONSIBLE CHARGE OF:
REGISTERED PROFESSIONAL ENGINEER — QUOC TRUNG NGUYEN No. C71743 Exp. 12/31/13 CIVIL — STATE OF CALIFORNIA
O. NGUYEN
RCE C 71743 (EXP.12-31-13)
JULY 16, 2013
DATE

DESIGNED BY: QN
CHECKED BY: GR
DRAWN BY: NL
DRAWING CODE:
JOB NO. 11017
PLOT DATE: 09/01/2016
SCALE: AS SHOWN

COUNTY OF ORANGE
OC PUBLIC WORKS

TCM Engineers Inc.
10370 HEMET STREET, Suite 230
RIVERSIDE, CA 92503
Tel: (951) 687-1005

LA PATA AVENUE GAP CLOSURE
BRIDGE NO. 4

CALTRANS STANDARD PLANS NO. 2

Sheet Reference Number

S4-22

283 OF 492

W:\11017 La Pata Ave Gap Closure\Construction Support\As-builts\Bridge No. 4\20160831\S4-22_25 Standard Plan.dwg, Layout: S4-22 – Caltrans Standard Plans No.2, Aug 24, 2016 3:12pm

DIST	COUNTY	ROUTE	POST MILES TOTAL PROJECT	SHEET NO.	TOTAL SHEETS

REGISTERED CIVIL ENGINEER

May 20, 2011
PLANS APPROVAL DATE

REGISTERED PROFESSIONAL ENGINEER — Richard Raghebati-Kermani — C051119 — Exp. 3-30-11 — CIVIL — STATE OF CALIFORNIA

THE STATE OF CALIFORNIA OR ITS OFFICERS OR AGENTS SHALL NOT BE RESPONSIBLE FOR THE ACCURACY OR COMPLETENESS OF SCANNED COPIES OF THIS PLAN SHEET.

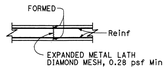

ALTERNATIVE DECK CONSTRUCTION JOINTS

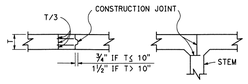

BRIDGE DETAIL 5-2 BRIDGE DETAIL 5-3
Top or bottom slab

DECK CONSTRUCTION JOINTS

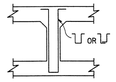

REINFORCED BOX GIRDER
Girder or diaphragm

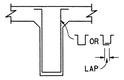

T-BEAM
Girder, bent cap or diaphragm

PRECAST GIRDER

STIRRUP SIZE	LAP
#4	5"
#5	6"
#6	7½"
#7	9"
#8	10"

A reinforcement bar must be placed inside of each stirrup hook or 90° bend.

BRIDGE DETAIL 5-5
ALTERNATIVE STIRRUPS

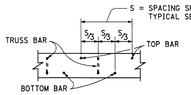

BRIDGE DETAIL 5-10

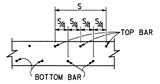

BRIDGE DETAIL 5-11
TRANSVERSE DECK REINFORCEMENT SPACING DIAGRAMS

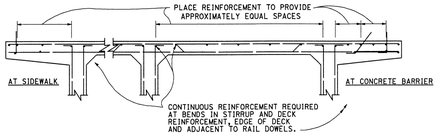

BRIDGE DETAIL 5-15
TOP GIRDER REINFORCEMENT

NOTES:

1. In simple spans, transverse joints are not permitted unless approved by the Engineer.
2. In continuous spans, transverse joints may be located at about the ¼ point of the span.
3. Reinforcing steel shall be continuous through all construction joints.
4. Longitudinal joints shall be located at the edge of a traffic lane unless otherwise permitted by the Engineer.

STATE OF CALIFORNIA
DEPARTMENT OF TRANSPORTATION

BRIDGE DETAILS

NO SCALE

BO-5

2010 STANDARD PLAN BO-5

DIST	COUNTY	ROUTE	POST MILES TOTAL PROJECT	SHEET NO.	TOTAL SHEETS

REGISTERED CIVIL ENGINEER

May 20, 2011
PLANS APPROVAL DATE

REGISTERED PROFESSIONAL ENGINEER — Richard Raghebati-Kermani — C051119 — Exp. 3-30-11 — CIVIL — STATE OF CALIFORNIA

THE STATE OF CALIFORNIA OR ITS OFFICERS OR AGENTS SHALL NOT BE RESPONSIBLE FOR THE ACCURACY OR COMPLETENESS OF SCANNED COPIES OF THIS PLAN SHEET.

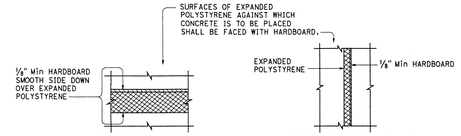

BRIDGE DETAIL 13-1
PROTECTION OF HORIZONTAL POLYSTYRENE

BRIDGE DETAIL 13-2
PROTECTION OF VERTICAL POLYSTYRENE

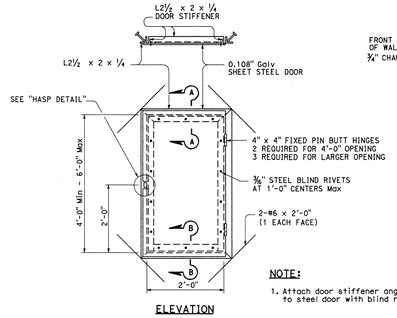

ELEVATION

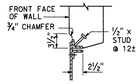

SECTION A-A

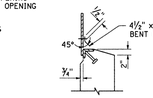

SECTION B-B

NOTE:

1. Attach door stiffener angles and bent sheet to steel door with blind rivets.

BRIDGE DETAIL 13-3
ACCESS DOOR

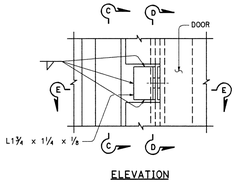

ELEVATION

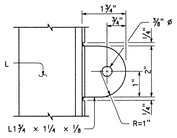

SECTION C-C

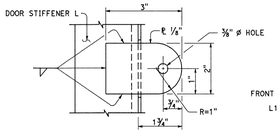

SECTION D-D

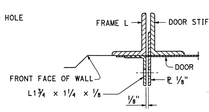

SECTION E-E

HASP DETAIL

STATE OF CALIFORNIA
DEPARTMENT OF TRANSPORTATION

BRIDGE DETAILS

NO SCALE

BO-13

2010 STANDARD PLAN BO-13

DIST	COUNTY	ROUTE	POST MILES TOTAL PROJECT	SHEET NO.	TOTAL SHEETS

REGISTERED CIVIL ENGINEER

May 20, 2011
PLANS APPROVAL DATE

REGISTERED PROFESSIONAL ENGINEER — Amir M. Mirzai — C067861 — Exp. 9-30-11 — CIVIL — STATE OF CALIFORNIA

THE STATE OF CALIFORNIA OR ITS OFFICERS OR AGENTS SHALL NOT BE RESPONSIBLE FOR THE ACCURACY OR COMPLETENESS OF SCANNED COPIES OF THIS PLAN SHEET.

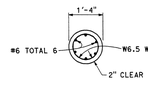

SECTION A-A

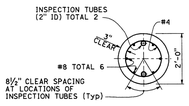

SECTION B-B
(With Inspection tubes)

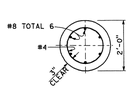

SECTION B-B
(Without Inspection tubes)

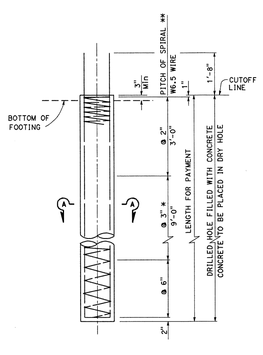

ELEVATION
90 kip AND 140 kip
DESIGN CAPACITY

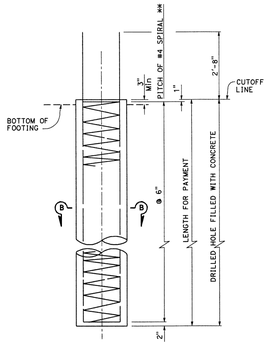

ELEVATION
200 kip
DESIGN CAPACITY

* @ 2" at option of contractor

** Extend at 2" pitch to top of anchor piles and load test piles. For longitudinal reinforcement for anchor piles and load test piles, see "Load Test Pile Details (2)", Standard Plan B2-10.

NOTES:

1. Reinforcement extending into footing shall be hooked as required to provide clearance to top of footing.
2. Lapped splices in spiral pile reinforcement shall be lapped at least 80 wire/bar diameters. Spiral pile reinforcement at splices and at ends shall be terminated with a 135° hook with a 6" tail hooked around a longitudinal bar.
3. Piles shall be extended only in accordance with details shown in the Project Plans.

DESIGN NOTES:

REINFORCED CONCRETE

fy = 60,000 psi
f'c = 4,000 psi

DESIGN CAPACITY

90 kip and 140 kip PILE

COMPRESSION:
140 kip (Service state)
280 kip (Nominal axial structural resistance)

TENSION:
56 kip (Service state)
140 kip (Nominal axial structural resistance)

200 kip PILE

COMPRESSION:
200 kip (Service state)
400 kip (Nominal axial structural resistance)

TENSION:
80 kip (Service state)
200 kip (Nominal axial structural resistance)

STATE OF CALIFORNIA
DEPARTMENT OF TRANSPORTATION

**16" AND 24"
CAST-IN-DRILLED-HOLE
CONCRETE PILE**

NO SCALE

B2-3

2010 STANDARD PLAN B2-3

DIST	COUNTY	ROUTE	POST MILES TOTAL PROJECT	SHEET NO.	TOTAL SHEETS

REGISTERED CIVIL ENGINEER

April 20, 2012
PLANS APPROVAL DATE

REGISTERED PROFESSIONAL ENGINEER — Gary Wang — C068396 — Exp. 6-30-12 — CIVIL — STATE OF CALIFORNIA

THE STATE OF CALIFORNIA OR ITS OFFICERS OR AGENTS SHALL NOT BE RESPONSIBLE FOR THE ACCURACY OR COMPLETENESS OF SCANNED COPIES OF THIS PLAN SHEET.

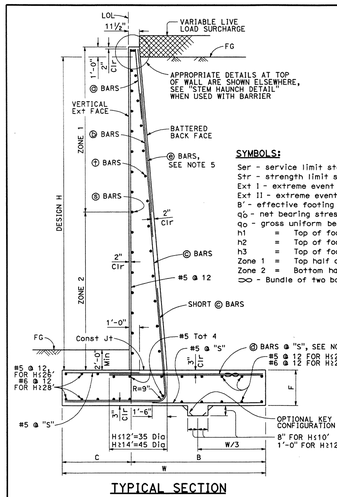

TYPICAL SECTION

SYMBOLS:

Ser - service limit state I
Str - strength limit state I
Ext I - extreme event limit state I
Ext II - extreme event limit state II
B' - effective footing width (ft)
q_0 - net bearing stress (ksf), q_0 assumed to be FG at toe
q_0 - gross uniform bearing stress (ksf)
h1 = Top of footing to top of short bar
h2 = Top of footing to top of bar
h3 = Top of footing to top of bar
Zone 1 = Top half of stem height
Zone 2 = Bottom half of stem height
- Bundle of two bars

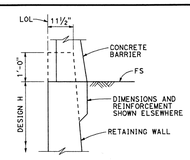

STEM HAUNCH DETAIL

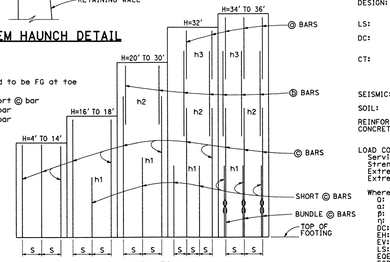

ELEVATION

DESIGN CONDITIONS:

Design H may be exceeded by 6" before going to the next size. Special footing design is required where foundation material is incapable of supporting bearing stress listed in the table.

DESIGN NOTES:

TO ACCOMPANY PLANS DATED _____

DESIGN: AASHTO LRFD Bridge Design Specifications, 4th Edition with California Amendments

LS: Varied surcharge on level ground surface

DC: Stem Architectural Treatment of thickness up to 6" of concrete (75 psf) considered

CT: 54 kip transverse force applied at He = 32", distributed over 10 feet at the top of wall and 1 : 1 distribution down and outward. Distribution below footing taken no less than 40'.

SEISMIC: kh = 0.2, kv = 0.0

SOIL: ø = 34°, γ = 120 pcf

REINFORCED CONCRETE: f'c = 3,600 psi
fy = 60,000 psi

LOAD COMBINATIONS AND LIMIT STATES:

Service I Q = 1.000DC+1.00EV+1.00EH+1.00LS
Strength I Q = αDC+βEV+γEH+1.75LS
Extreme I Q = 1.000DC+1.00EV+1.00EH+1.00EQD+1.00EQE
Extreme II Q = 1.000DC+1.00EV+1.00EH+1.00CT

Where:

Q: Force Effects
α: 1.25 or 0.90, Whichever Controls Design
β: 1.35 or 1.00, Whichever Controls Design
γ: 1.50 or 0.90, Whichever Controls Design
DC: Dead Load of Structure Components
EH: Horizontal Earth Fill Pressure
EV: Vertical Earth Pressure from Earth Fill Weight
LS: Live Load Surcharge
EQE: Seismic Earth Pressure
EQD: Soil and Structural and Nonstructural Components Inertia
CT: Vehicular Collision Force

TABLE OF REINFORCING STEEL, DIMENSIONS AND DATA

DESIGN H	4'	6'	8'	10'	12'	14'	16'	18'	20'	22'	24'	26'	28'	30'	32'	34'	36'
H	6'-10"	7'-0"	7'-3"	7'-7"	8'-4"	9'-7"	10'-9"	12'-0"	13'-3"	14'-6"	15'-9"	17'-1"	18'-5"	19'-10"	21'-2"	22'-7"	24'-0"
C	2'-2"	2'-3"	2'-3"	2'-3"	2'-4"	2'-6"	3'-0"	3'-6"	4'-0"	4'-6"	5'-0"	5'-5"	6'-0"	6'-6"	7'-2"	7'-8"	8'-2"	9'-0"
B	4'-8"	4'-9"	5'-0"	5'-3"	5'-10"	6'-7"	7'-3"	8'-0"	8'-9"	9'-6"	10'-4"	11'-1"	11'-11"	12'-8"	13'-6"	14'-5"	15'-0"
F	1'-4"	1'-4"	1'-4"	1'-4"	1'-4"	1'-8"	1'-8"	1'-9"	1'-9"	1'-11"	2'-2"	2'-10"	3'-3"	3'-6"	3'-6"	4'-0"	4'-3"
BATTER	½ : 12	½ : 12	½ : 12	½ : 12	½ : 12	½ : 12	½ : 12	½ : 12	½ : 12	½ : 12	⅝ : 12	¾ : 12	¾ : 12	¾ : 12	1 : 12	1 : 12	1 : 12
SPACING "S"	9"	9"	9"	9"	9"	9"	6"	5"	6"	6"	6"	6"	6"	6"	6"	10"	8"
Ⓐ BARS	-	-	-	-	-	-	-	-	-	-	-	-	-	-	#7	#7	#6
Ⓑ BARS	-	-	-	-	-	-	-	-	#7	#7	#7	#7	#7	#7	#9	#9	#8
Ⓒ BARS	#6	#6	#6	#6	#6	#6	#7	#7	#8	#9	#9	#10	#10	#10	#11	#11	#11
Ⓓ BARS	#5	#5	#6	#6	#6	#6	#8	#8	#9	#9	#9	#10	#10	#10	#11	#11	#11
h1	-	-	-	-	-	-	-	5'-9"	5'-10"	8'-0"	9'-0"	10'-1"	11'-0"	12'-1"	13'-0"	13'-0"	12'-7"
h2	-	-	-	-	-	-	-	-	10'-5"	13'-0"	14'-7"	17'-6"	19'-0"	20'-5"	19'-0"	18'-0"	20'-2"
h3	-	-	-	-	-	-	-	-	-	-	-	-	-	-	21'-2"	21'-10"	24'-0"
ZONE 1 Ⓐ BARS	#5 @ 18	#5 @ 18	#5 @ 18	#5 @ 18	#5 @ 18	#5 @ 18	#5 @ 18	#5 @ 18	#5 @ 18	#5 @ 12	#5 @ 12	#5 @ 12	#5 @ 12	#5 @ 12	#5 @ 12	#5 @ 12	#5 @ 12
ZONE 2 Ⓐ BARS	#5 @ 18	#5 @ 18	#5 @ 18	#5 @ 18	#5 @ 18	#5 @ 18	#5 @ 12	#5 @ 12	#5 @ 12	#5 @ 12	#5 @ 12	#5 @ 12	#6 @ 12	#6 @ 12	#6 @ 12	#7 @ 12	#7 @ 12
ZONE 1 Ⓑ BARS	#4 @ 18	#4 @ 18	#4 @ 18	#4 @ 18	#4 @ 18	#4 @ 18	#4 @ 18	#4 @ 18	#4 @ 18	#4 @ 18	#4 @ 12	#4 @ 12	#4 @ 12	#4 @ 12	#4 @ 12	#4 @ 12	#4 @ 12
ZONE 2 Ⓑ BARS	#4 @ 18	#4 @ 18	#4 @ 18	#4 @ 18	#4 @ 18	#4 @ 18	#4 @ 18	#4 @ 18	#4 @ 18	#4 @ 18	#4 @ 12	#4 @ 12	#4 @ 12	#4 @ 12	#5 @ 12	#5 @ 12	#5 @ 12
Ser1 B', q_0	6.8, 0.7	6.5, 1.0	6.2, 1.3	6.0, 1.6	6.3, 2.0	7.5, 2.1	8.6, 2.2	9.8, 2.3	11.0, 2.4	12.1, 2.5	13.2, 2.8	14.4, 2.9	15.5, 3.1	16.8, 3.3	18.0, 3.5	19.2, 3.7	20.6, 3.7
Str1 B', q_0	6.6, 1.6	5.0, 1.8	3.6, 2.3	3.0, 3.3	3.2, 4.0	4.3, 3.8	5.3, 3.7	6.4, 3.7	7.4, 3.8	8.2, 4.1	9.0, 4.4	9.9, 4.6	10.7, 4.9	11.7, 5.2	12.6, 5.4	13.6, 5.8	14.6, 5.9
Ext II B', q_0	5.2, 1.1	4.1, 1.5	3.9, 2.2	3.1, 3.4	2.8, 4.8	3.2, 5.3	3.6, 5.7	4.1, 6.1	4.6, 6.4	5.0, 6.9	5.3, 7.6	5.8, 8.1	6.1, 8.9	6.7, 9.4	7.1, 10.0	7.5, 10.7	8.2, 10.9
Ext II: B', q_0	2.6, 2.2	2.7, 2.6	2.8, 3.1	2.9, 3.6	3.7, 3.6	5.2, 3.3	6.7, 3.1	8.3, 3.0	9.8, 3.0	11.2, 3.1	12.5, 3.2	13.9, 3.4	15.2, 3.6	16.7, 3.8	18.0, 4.0	19.3, 4.2	20.8, 4.3

NOTES:

1. For details not shown and drainage notes see (RSP B3-1)
2. For wall stem joint details see (B0-3 / S-3) and (B0-3 / S-4)
3. At Ⓒ bars:
   H ≤ 6', no splices are allowed within 1'-8" above the top of footing.
   H > 6', no splices are allowed within H/4 above the top of footing.
4. Bundle Ⓓ bars for H = 34' & 36'.
5. Provide #6 @ 10" x 15'-0" Ⓑ bars over a distance of 8'-0" measured from all expansion joints, begin wall and end wall locations. For H ≤ 14', hook Ⓑ bar into footing and reduce bar length as needed to maintain Min Clr cover.

STATE OF CALIFORNIA
DEPARTMENT OF TRANSPORTATION

RETAINING WALL TYPE 1 (CASE 1)

NO SCALE

RSP B3-1A DATED APRIL 20, 2012 SUPPLEMENTS THE STANDARD PLANS BOOK DATED 2010.

REVISED STANDARD PLAN RSP B3-1A

AS-BUILT

2010 REVISED STANDARD PLAN RSP B3-1A

COUNTY OF ORANGE
CALIFORNIA

MARK	DESCRIPTION	DATE	APPR.

PREPARED UNDER THE RESPONSIBLE CHARGE OF:

REGISTERED PROFESSIONAL ENGINEER — QUOC TRONG NGUYEN — No.C71743 — Exp.12/31/13 — CIVIL — STATE OF CALIFORNIA

Q. NGUYEN
RCE C 71743 (EXP.12-31-13)

JULY 16, 2013
DATE

DESIGNED BY: QN
CHECKED BY: GR
DRAWN BY: NL
DRAWING CODE:
JOB NO. 11017
PLOT DATE: 09/01/2016
SCALE: AS SHOWN

COUNTY OF ORANGE
OC PUBLIC WORKS

TRC Engineers, Inc.
10370 HEMET STREET, Suite 230
RIVERSIDE, CA 92503
TEL: (951) 682-7005

LA PATA AVENUE GAP CLOSURE
BRIDGE NO. 4

CALTRANS STANDARD PLANS NO. 3

Sheet Reference Number

S4-23

W:\11017 La Pata Ave Gap Closure\Construction Supports\As-built\Bridge No. 4\20160831\S4-21_25 Standard Plan.dwg, Layout: S4-23 - Caltrans Standard Plans No.3, Aug 24, 2016 3:12pm

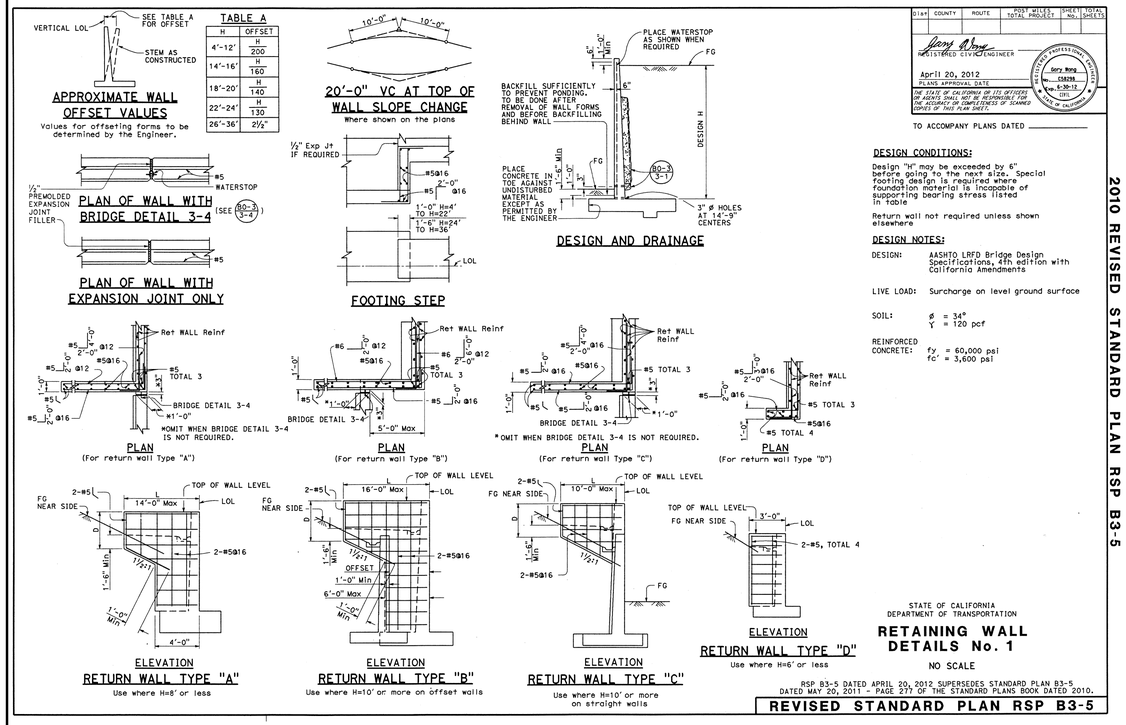

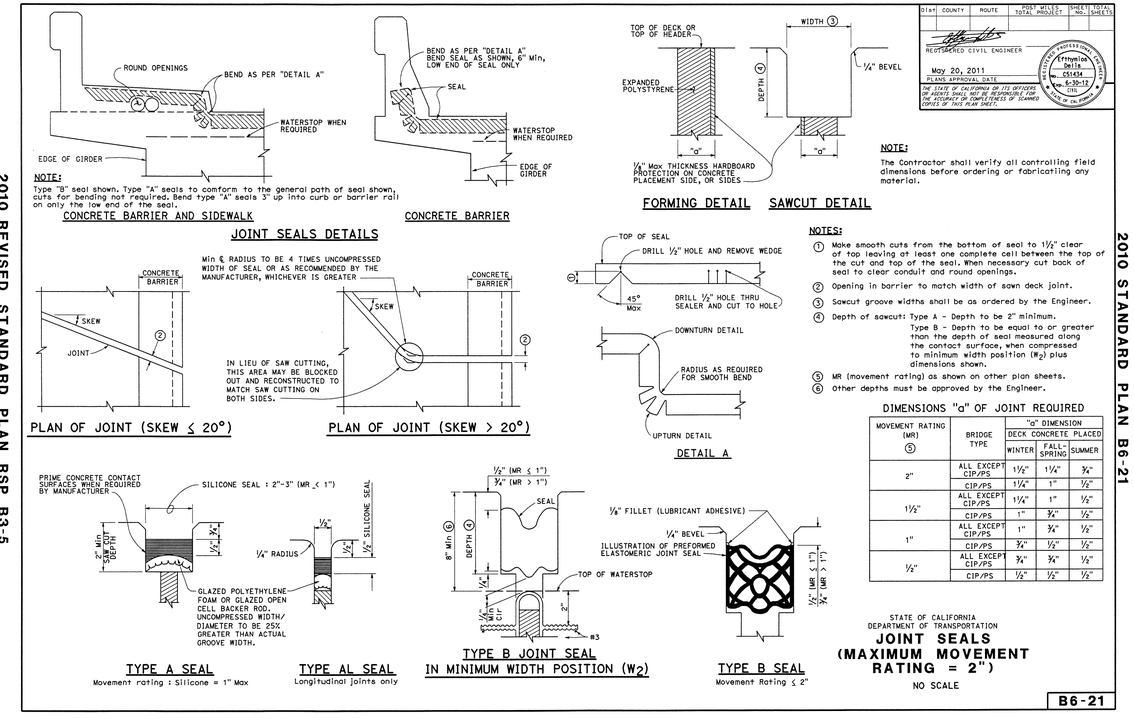

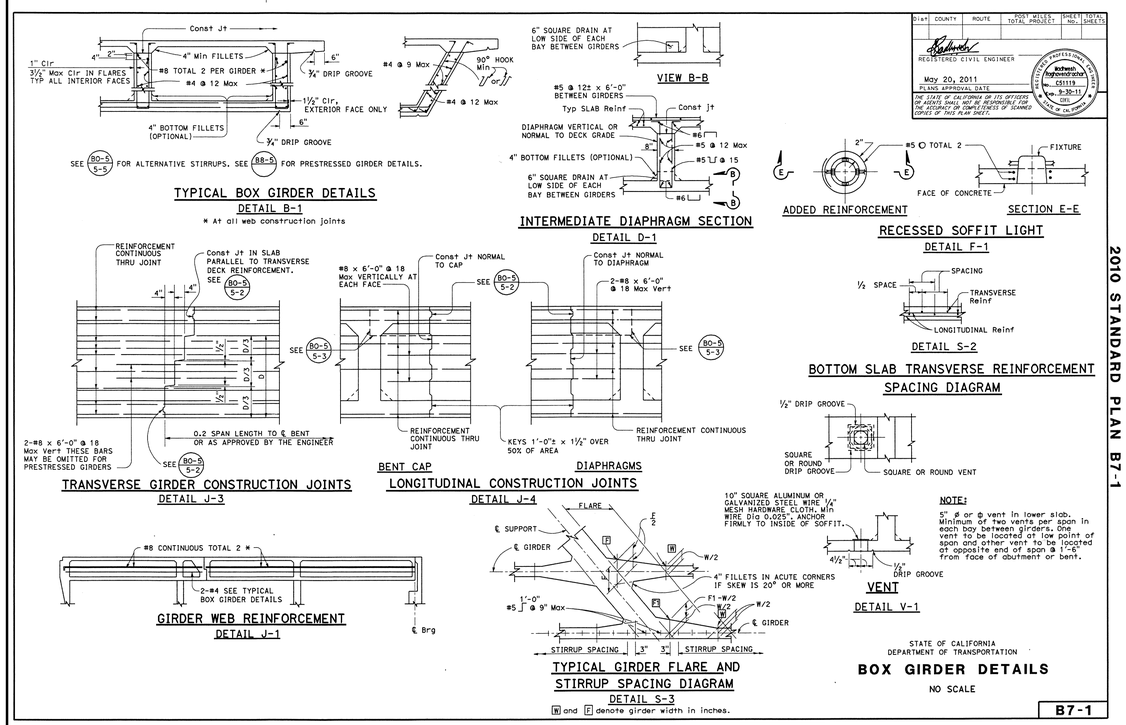

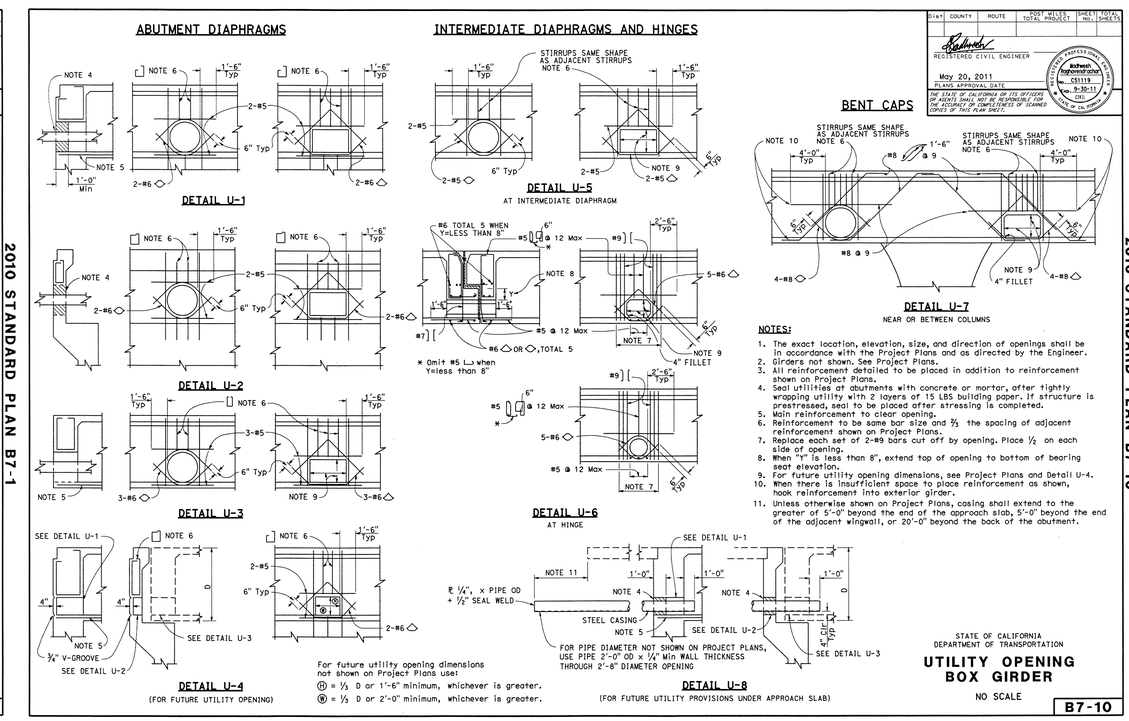

AS-BUILT

COUNTY OF ORANGE CALIFORNIA

MARK	DESCRIPTION	DATE	APPR.

PREPARED UNDER THE RESPONSIBLE CHARGE OF: REGISTERED PROFESSIONAL ENGINEER No.C71743 Exp.12/31/13 CIVIL STATE OF CALIFORNIA

D. NGUYEN
RCE C 71743 (EXP.12-31-13)
JULY 16, 2013
DATE

DESIGNED BY: CN
CHECKED BY: GR
DRAWN BY: NL
DRAWING CODE:
JOB NO. 11017
PLOT DATE: 09/01/2016
SCALE: AS SHOWN

COUNTY OF ORANGE
OC PUBLIC WORKS

TENGI Engineers Inc
10370 HEMET STREET, Suite 230
Tel: (951) 687-1005

LA PATA AVENUE GAP CLOSURE
BRIDGE NO. 4

CALTRANS STANDARD PLANS NO. 4

Sheet Reference Number

S4-24

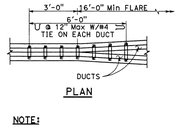

NOTE:
Place closed end of duct ties in direction of flare.

STIRRUP REINFORCEMENT AT FLARE OF GIRDER STEM

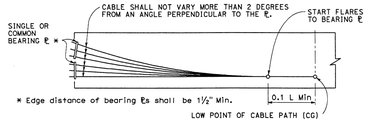

BEARING PLATE PRESTRESSING PATH

NOTES:
Girder stem may be flared near anchorage to provide clearances for the particular anchorage system.

Place duct ties, as shown for flared girder stem, at each location where ducts change horizontal direction.

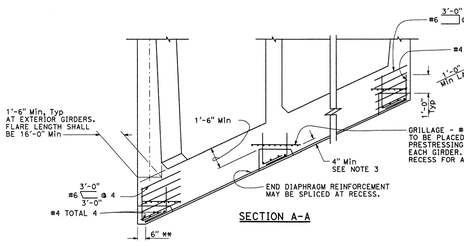

SECTION A-A

** Omit for skew < 20°

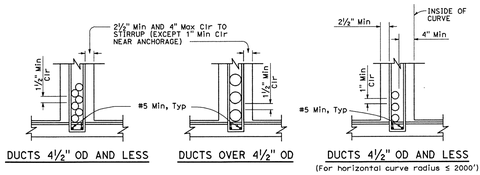

DUCTS 4½" OD AND LESS | DUCTS OVER 4½" OD | DUCTS 4½" OD AND LESS (For horizontal curve radius ≤ 2000')

CLEARANCE REQUIREMENTS FOR DUCTS

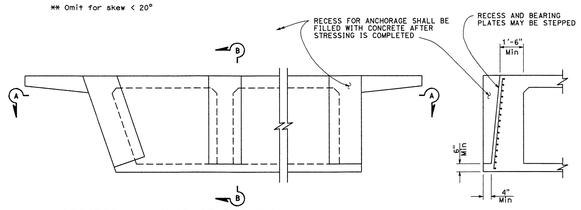

PRESTRESS ANCHORAGE DETAILS AT SEAT TYPE ABUTMENTS

SECTION B-B

NOTES:
1. Duct patterns shown are for a 1'-0" wide girder stem. For other widths, the minimum clearances must be maintained.
2. Stirrups may also be used. For continuous stirrups in girder stems greater than 1'-4" wide (lesser of flares) use 2-#5 minimum U or L.
3. 4" minimum is not required if this detail is used at hinge location.
4. For additional details, see Standard Plan B7-1.

STATE OF CALIFORNIA
DEPARTMENT OF TRANSPORTATION

CAST-IN-PLACE PRESTRESSED GIRDER DETAILS

NO SCALE

B8-5

2010 STANDARD PLAN B8-5

DIST	COUNTY	ROUTE	POST MILES TOTAL PROJECT	SHEET No.	TOTAL SHEETS

REGISTERED CIVIL ENGINEER
May 20, 2011
PLANS APPROVAL DATE
REGISTERED PROFESSIONAL ENGINEER Jun Wu C49369 Exp. 9-30-12 CIVIL STATE OF CALIFORNIA
THE STATE OF CALIFORNIA OR ITS OFFICERS OR AGENTS SHALL NOT BE RESPONSIBLE FOR THE ACCURACY OR COMPLETENESS OF SCANNED COPIES OF THIS PLAN SHEET.

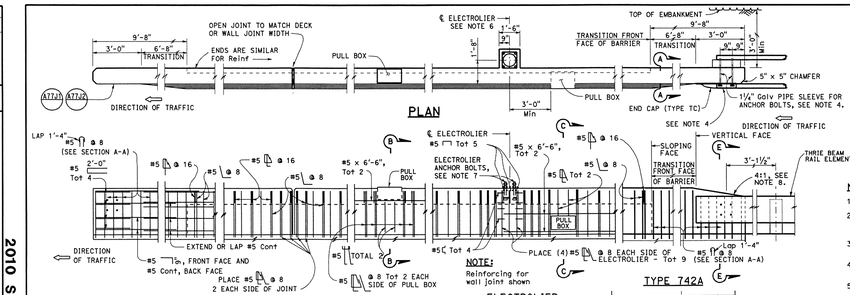

METAL RAILING CONNECTION | DECK OR WALL JOINT | ELEVATION | ELECTROLIER (See Note 5) | TYPE 742A

NOTE:
Reinforcing for wall joint shown

NOTES:
1. Walls are to be backfilled before barrier is placed.
2. Clearance to reinforcing steel in barrier to be 1", except as noted. Longitudinal reinforcement to stop at all expansion joints.
3. Dimensions may vary with roadway cross slope and with certain thickness of surfacing. See Project Plans.
4. For typical metal railing connection details not shown, see Standard Plans A77J1 and A77J2.
5. See Standard Plans ES-9A, ES-9B, ES-9C, ES-9D and ES-9E for electrical details. The maximum number of conduits in the barrier is limited to two 2" conduits along with one 3" conduit. When a 3" conduit is used, it is restricted to the base of the barrier.
6. For electrolier mounting details, See Standard Plans ES-6A and ES-6B.
7. Minimum concrete edge distance, to the reinforcing shown, shall be maintained. Edge distance may be adjusted to accommodate increase in concrete cover for architectural treatment.
8. Taper the top of the end of the bridge railing at 4:1 to match the top elevation of the thrie beam rail element.

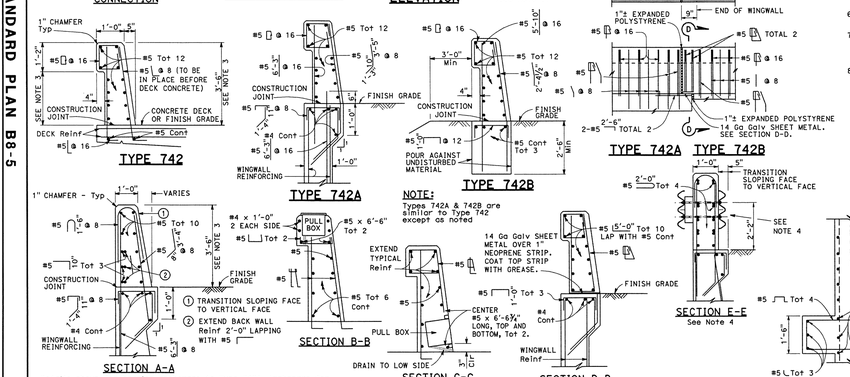

Details shown for barrier anchorage to Type 742A. Anchorage for barrier Types 742 and 742A are similar to their respective details.

STATE OF CALIFORNIA
DEPARTMENT OF TRANSPORTATION

CONCRETE BARRIER TYPE 742

NO SCALE

B11-57

2010 STANDARD PLAN B11-57

DIST	COUNTY	ROUTE	POST MILES TOTAL PROJECT	SHEET No.	TOTAL SHEETS

REGISTERED CIVIL ENGINEER
May 20, 2011
PLANS APPROVAL DATE
REGISTERED PROFESSIONAL ENGINEER Tilton Setter C62802 Exp. 3-31-12 CIVIL STATE OF CALIFORNIA
THE STATE OF CALIFORNIA OR ITS OFFICERS OR AGENTS SHALL NOT BE RESPONSIBLE FOR THE ACCURACY OR COMPLETENESS OF SCANNED COPIES OF THIS PLAN SHEET.

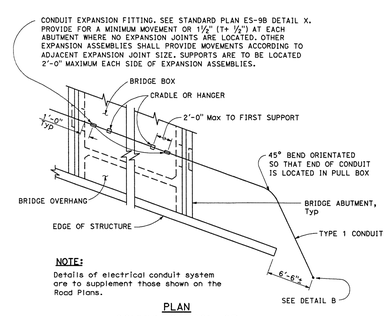

NOTE:
Details of electrical conduit system are to supplement those shown on the Road Plans.

PLAN
COMMUNICATION OR SPRINKLER CONTROL CONDUITS

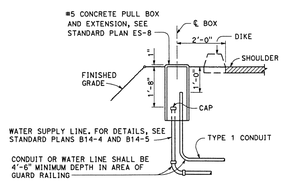

DETAIL B

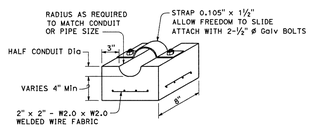

NOTES:
1. Cradles to be precast concrete.
2. Secure all cradles to bottom slab of bridge with epoxy adhesive, except as provided below.

CONCRETE CRADLE

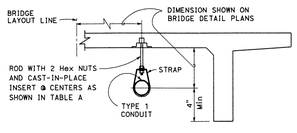

OTHER THAN BOX GIRDER
CONDUIT HANGER SUPPORT DETAILS

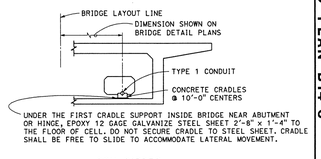

BOX GIRDER
CONDUIT SUPPORT DETAILS

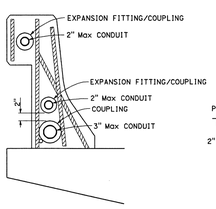

CONDUIT IN BRIDGE RAILING

NOTES:
1. The maximum conduit sizes shown are for a straight run across the bridge without pull boxes.
2. In a bridge railing with lighting standards or pull boxes, reduce size of affected conduits as needed.

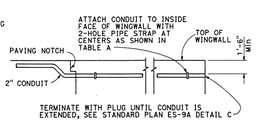

CONDUIT IN OVERHANG-WINGWALL DETAIL

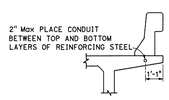

CONDUIT IN OVERHANG

CONDUIT LOCATIONS
(For 2" conduit only except as noted)
For location see Bridge Detail plans.

TABLE A

CONDUIT	2½" OR LESS	3"	3½"
ROD	⅜" ø	½" ø	⅝" ø
STRAP	0.090" x 1"	0.090" x 1"	0.105" x 1½"
SUPPORT SPACING	10'-0"	10'-0"	10'-0"

STATE OF CALIFORNIA
DEPARTMENT OF TRANSPORTATION

COMMUNICATION AND SPRINKLER CONTROL CONDUITS (CONDUIT LESS THAN 4")

NO SCALE

B14-3

2010 STANDARD PLAN B14-3

DIST	COUNTY	ROUTE	POST MILES TOTAL PROJECT	SHEET No.	TOTAL SHEETS

REGISTERED ELECTRICAL ENGINEER
May 20, 2011
PLANS APPROVAL DATE
REGISTERED PROFESSIONAL ENGINEER J.S. Sandoval E11803 Exp. 9-30-12 ELECTRICAL STATE OF CALIFORNIA
THE STATE OF CALIFORNIA OR ITS OFFICERS OR AGENTS SHALL NOT BE RESPONSIBLE FOR THE ACCURACY OR COMPLETENESS OF SCANNED COPIES OF THIS PLAN SHEET.

AS-BUILT

COUNTY OF ORANGE CALIFORNIA

MARK	DESCRIPTION	DATE	APPR.

PREPARED UNDER THE RESPONSIBLE CHARGE OF:
REGISTERED PROFESSIONAL ENGINEER No. C71743 Exp. 12/31/13 CIVIL STATE OF CALIFORNIA
O. NGUYEN
RCE C 71743 (EXP.12-31-13)
JULY 16, 2013
DATE

DESIGNED BY: ON
CHECKED BY: GR
DRAWN BY: NL
DRAWING CODE:
JOB NO. 11017
PLOT DATE: 09/01/2016
SCALE: AS SHOWN

COUNTY OF ORANGE
OC PUBLIC WORKS

TENG Engineers Inc
10370 HEMET STREET, Suite 230
RIVERSIDE, CA 92503
Tel: (951) 687-1005

LA PATA AVENUE GAP CLOSURE
BRIDGE NO. 4
CALTRANS STANDARD PLANS NO. 5

Sheet Reference Number
S4-25

W:\11017 La Pata Ave Gap Closure\Construction Supports\As-builts\Bridge No. 4\20160831\S4-21_25 Standard Plan.dwg, Layout: S4-25 – Caltrans Standard Plans No.5, Aug 24, 2016 3:12pm

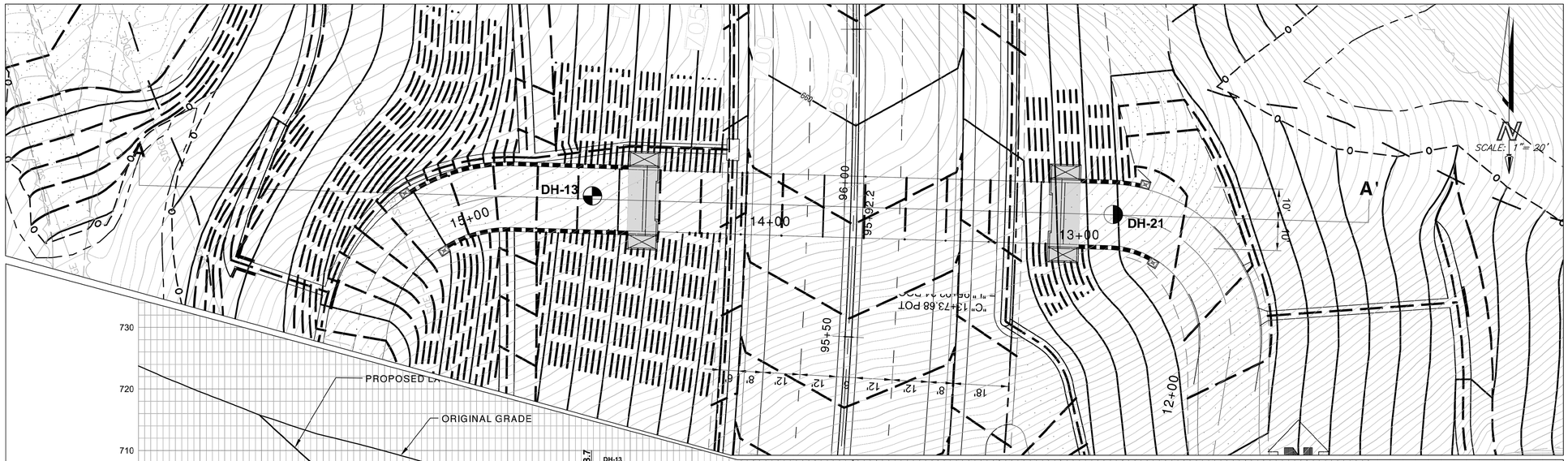

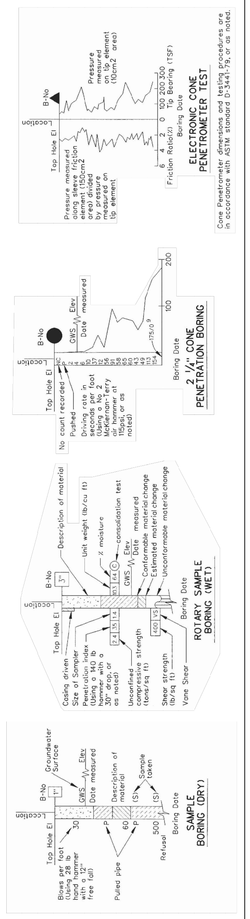

CONSISTENCY CLASSIFICATION FOR SOILS

According to the Standard Penetration Test (ASTM D-1586)

SPT N-Value/ feet	Granular	SPT N-Value/ feet	Cohesive
0-4	Very loose	<2	Very Soft
5-10	Loose	2-4	Soft
11-30	Medium Dense	5-9	Firm
31-50	Dense	9-15	Stiff
>50	Very Dense	16-30	Very Stiff
		>30	Hard

LEGEND OF EARTH MATERIALS (USCS) BASED ON ASTM D2487, D2488

CLAY; SILT; SAND; GRAVEL; SANDY CLAY / CLAYEY SAND; SANDY SILT / SILTY SAND; SILTY CLAY; CLAYEY SILT; ORGANIC MATTER AND/OR PEAT; SEDIMENTARY ROCK; METAMORPHIC ROCK; IGNEOUS ROCK

TYPES OF BORINGS

2/4" CONE PENETROMETER; SAMPLE BORING (DRY); ROTARY SAMPLE BORING (WET); AUGER BORING (DRY); TEST PIT; DIAMOND CORE BORING; JET BORING; ELECTRONIC CONE PENETROMETER

IN-SITU LAB & FIELD TEST DESIGNATIONS

AL	ATTERBERG LIMITS		
CA	CHEMICAL ANALYSIS		
CN	CONSOLIDATION		
CU	CONSOLIDATED UNDRAINED TRIAXIAL		
UU	UNCONSOLIDATED UNDRAINED TRIAXIAL		
UC	UNCONFINED COMPRESSION		
DS	DIRECT SHEAR		
MD	MAX. DRY DENSITY		
PP	POCKET PENETROMETER		
SA	SIEVE ANALYSIS		
PF	% FINER THAN #200 SIEVE		
TV	TORVANE		
P2	% Passing # 200 Sieve		
NSR	NO SOIL RECOVERY		

Note: Visual classifications of earth materials are based on field inspection and are confirmed or revised with laboratory test results as necessary.

COUNTY OF ORANGE CALIFORNIA

MARK	DESCRIPTION	DATE	APPR.

REGISTERED PROFESSIONAL ENGINEER GREGORY P. SILVER GE 2336 Exp. 12-31-13 GEOTECHNICAL STATE OF CALIFORNIA

PREPARED UNDER THE RESPONSIBLE CHARGE OF:

GREGORY P. SILVER
GE 2336 (Expiration 12-31-13)

April 10, 2013
DATE

DESIGNED BY: DS
DRAWN BY: DS
CHECKED BY: AT
DRAWING CODE:
JOB NO. 11017
PLOT DATE: 05/15/12
SCALE: AS SHOWN

COUNTY OF ORANGE
OC PUBLIC WORKS

GMU GEOTECHNICAL INC.
2324 Arroyo Vista
Rancho Santa Margarita, CA 92688

LA PATA AVENUE GAP CLOSURE
BRIDGE NO. 4

LOG OF TEST BORINGS

Sheet Reference Number

S4-26