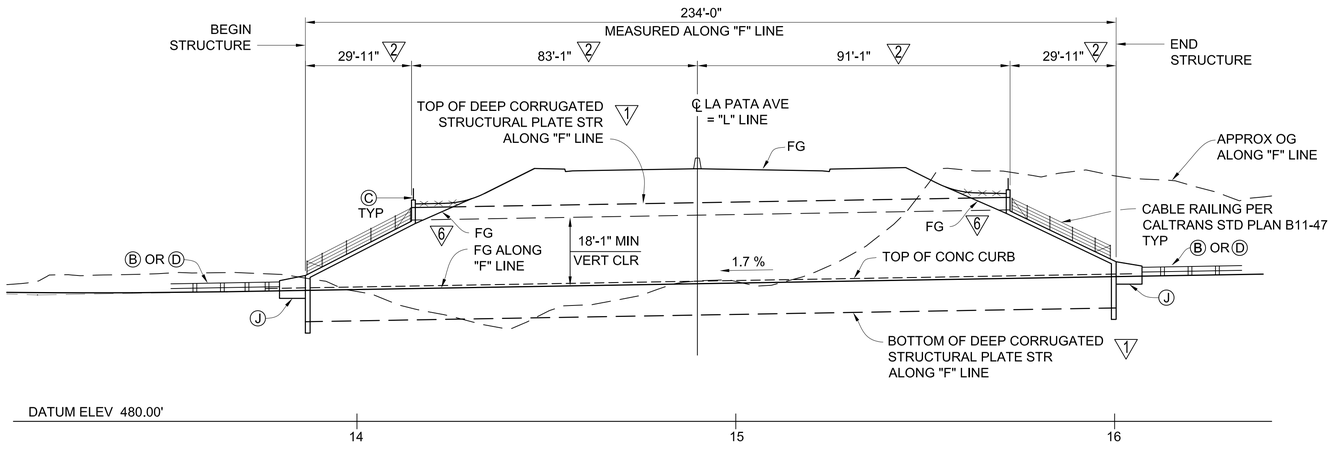

ELEVATION
NO SCALE

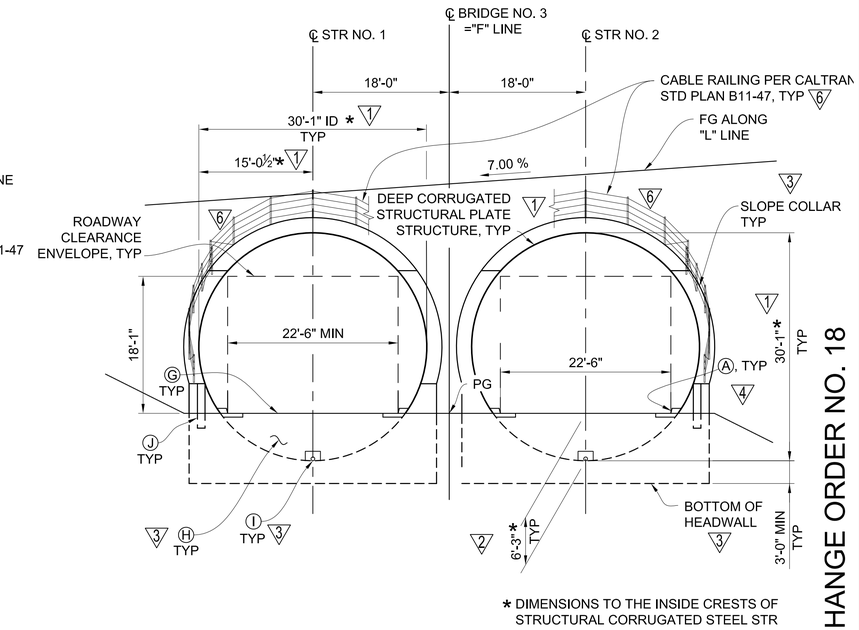

* DIMENSIONS TO THE INSIDE CRESTS OF STRUCTURAL CORRUGATED STEEL STR

TYPICAL SECTION
1" = 10'

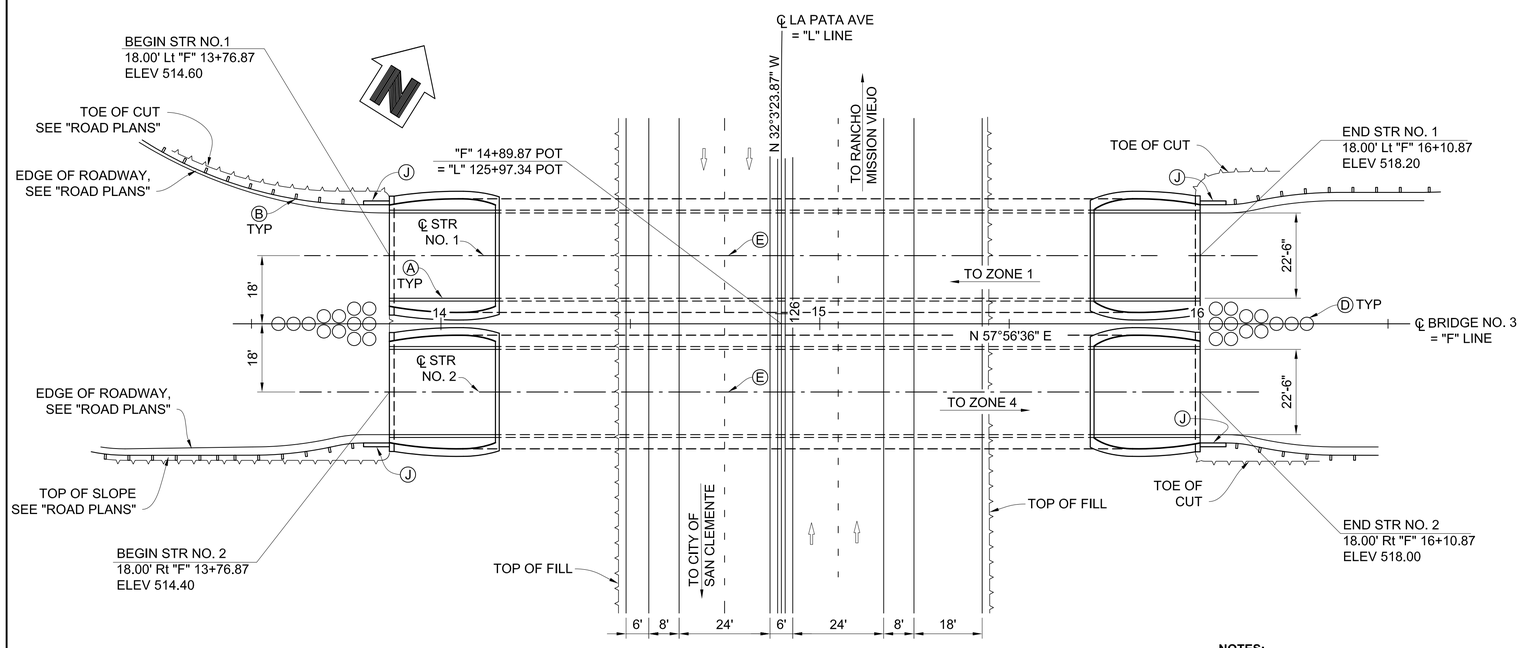

PLAN
NO SCALE

NOTES:

1. FOR "GENERAL NOTES", SEE SHEET S3-2
2. FOR ROADWAY CURVE DATA, SEE "ROADWAY PLANS"
3. REFER TO "EL" SHEETS FOR LIGHTING REQUIREMENTS

LEGEND:

INDICATES DIRECTION OF TRAFFIC

NOTES:

- (A) CONCRETE CURB, SEE "ROAD PLANS", SHEET ST-09
- (B) MBGR, SEE "ROAD PLANS", SHEET ST-09. REFER TO CALTRANS STANDARD PLAN A77J3 FOR STRUCTURAL CONNECTION DETAILS
- (C) CABLE RAILING, SEE "RETAINING WALL PLANS", SHEET RW-07
- (D) CRASH CUSHION SAND FILLED, SEE "ROAD PLANS", SHEET ST-09
- (E) 30'-1" ID DEEP CORRUGATED STRUCTURAL PLATE STRUCTURE, SEE "SHOP DRAWING PLANS"
- (G) AB SURFACING, SEE "ROAD PLANS", SHEET ST-09
- (H) ROADWAY FILL (CLEAN/NON-CORROSIVE) MATERIAL
- (I) 6" PERFORATED PIPE SUBDRAIN, SEE SHEET S3-4
- (J) CONCRETE WINGWALL

AS-BUILT
RE/SR: K. TRAN
Date: 01/21/2017

INDEX TO PLANS

CONTRACT CHANGE ORDER NO. 18

COUNTY OF ORANGE CALIFORNIA

MARK	DESCRIPTION	DATE	APPR.
6	RECORDED DRAWING	1-21-17	QN
5	ADDED NOTE	1-30-15	QN
4	MODIFIED CURB	1-30-15	QN
3	ADJUSTED ELEVATION	1-30-15	QN
2	ADJUSTED DIMENSION	1-30-15	QN
1	CHANGED STRUCTURE TYPE	1-30-15	QN

REGISTERED PROFESSIONAL ENGINEER QUYET TRONG NGUYEN No.C71743 Exp.12/31/13 CIVIL STATE OF CALIFORNIA

PREPARED UNDER THE RESPONSIBLE CHARGE OF:
Q. NGUYEN
RCE: C 71743 (EXP.12-31-13)
JULY 16, 2013
DATE

DESIGNED BY: BBB
CHECKED BY: GR
DRAWN BY: NL
DRAWING CODE:
JOB NO. 11017
PLOT DATE: 11/06/2017
SCALE: AS SHOWN

COUNTY OF ORANGE
OC PUBLIC WORKS

TENI Engineers
10270 HEMET STREET, Suite 230
RIVERSIDE, CA 92503
Tel: (951) 687-1005

LA PATA AVENUE GAP CLOSURE
BRIDGE NO. 3

GENERAL PLAN

Sheet Reference Number

S3-1R1

255R1 OF 492

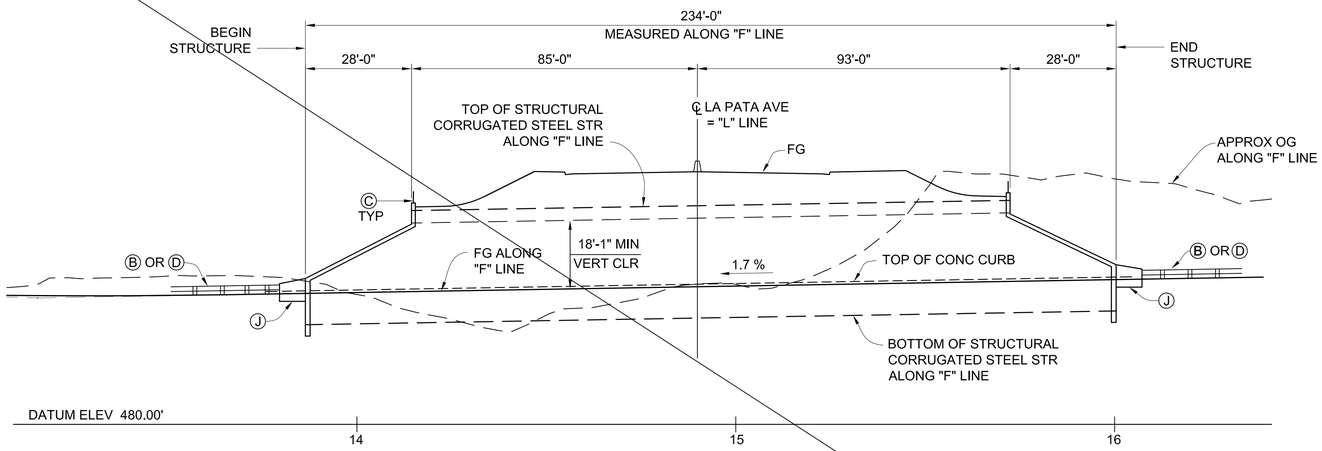

ELEVATION
NO SCALE

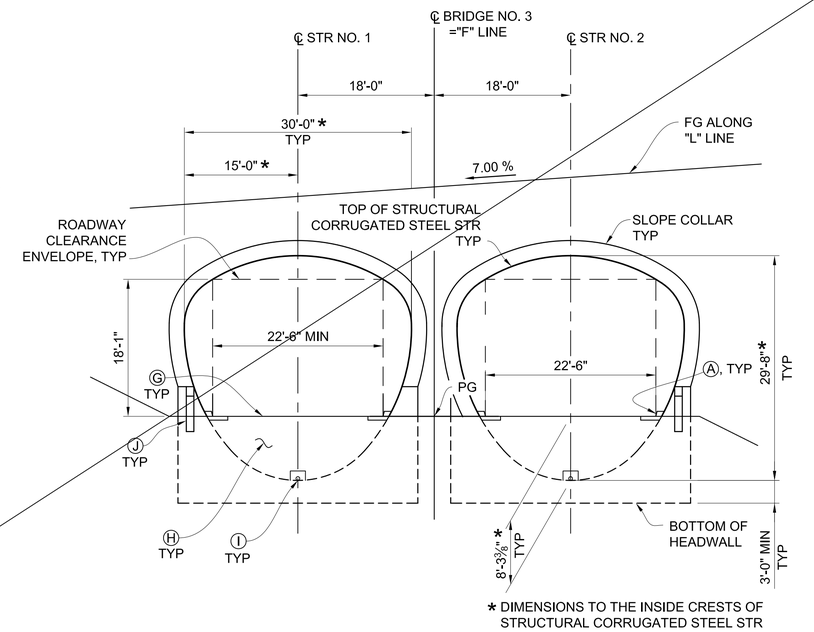

* DIMENSIONS TO THE INSIDE CRESTS OF STRUCTURAL CORRUGATED STEEL STR

TYPICAL SECTION
1" = 10'

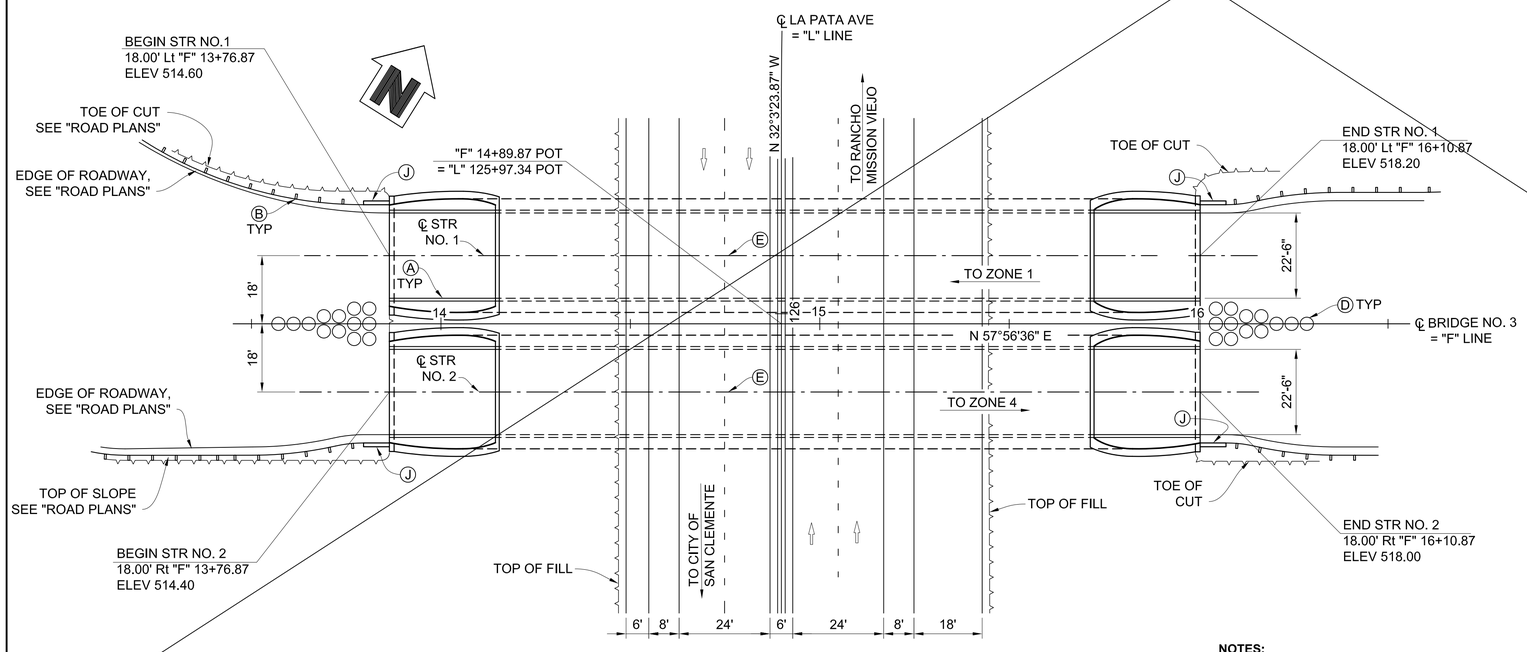

PLAN
NO SCALE

NOTES:

1. FOR "GENERAL NOTES", SEE SHEET S3-2
2. FOR ROADWAY CURVE DATA, SEE "ROADWAY PLANS"
3. REFER TO "EL" SHEETS FOR LIGHTING REQUIREMENTS

AS-BUILT
RE/SR: K. TRAN
Date: 01/21/2017

LEGEND:

⇨ INDICATES DIRECTION OF TRAFFIC

NOTES:

Ⓐ CONCRETE CURB, SEE "ROAD PLANS", SHEET ST-09

Ⓑ MBGR, SEE "ROAD PLANS", SHEET ST-09. REFER TO CALTRANS STANDARD PLAN A77J3 FOR STRUCTURAL CONNECTION DETAILS

Ⓒ CABLE RAILING, SEE "RETAINING WALL PLANS", SHEET RW-07

Ⓓ CRASH CUSHION SAND FILLED, SEE "ROAD PLANS", SHEET ST-09

Ⓔ AASHTO LONG-SPAN PEAR SHAPE STRUCTURAL PLATE CORRUGATED STEEL STRUCTURE WITH BITUMINOUS COATING INSIDE AND OUTSIDE WITH THE FOLLOWING DIMENSIONS:
SPAN: 30'-0"
RISE: 29'-8"

Ⓖ AB SURFACING, SEE "ROAD PLANS", SHEET ST-09

Ⓗ ROADWAY FILL (CLEAN/NON-CORROSIVE) MATERIAL

Ⓘ 6" PERFORATED PIPE SUBDRAIN, SEE SHEET S3-4

Ⓙ CONCRETE WINGWALL

INDEX TO PLANS

COUNTY OF ORANGE CALIFORNIA

MARK	DESCRIPTION	DATE	APPR.

PREPARED UNDER THE RESPONSIBLE CHARGE OF:
REGISTERED PROFESSIONAL ENGINEER — QUOC TRONG NGUYEN — No.C71743 Exp.12/31/13 — CIVIL — STATE OF CALIFORNIA
Q. NGUYEN
RCE: C 71743 (EXP.12-31-13)
JULY 16, 2013
DATE

DESIGNED BY: QN
CHECKED BY: GR
DRAWN BY: NL
DRAWING CODE:
JOB NO. 11017
SCALE: AS SHOWN
PLOT DATE: 11/06/2017

COUNTY OF ORANGE
OC PUBLIC WORKS

TENI Engineers
10270 HEMET STREET, Suite 230
RIVERSIDE, CA 92503
Tel: (951) 687-1005

LA PATA AVENUE GAP CLOSURE
BRIDGE NO. 3

GENERAL PLAN

Sheet Reference Number
S3-1

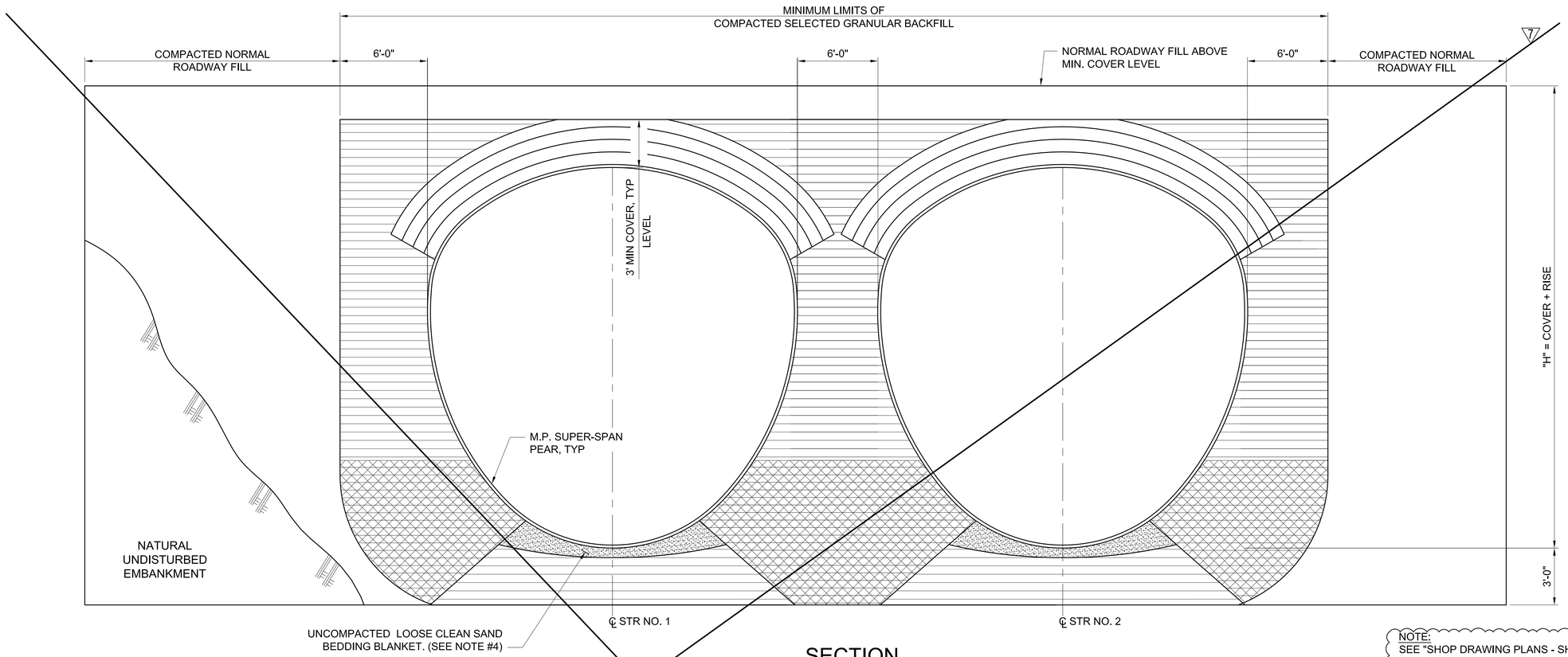

SECTION

LEGEND:

- SELECT GRANULAR STRUCTURAL BACKFILL; CRITICAL BACKFILL ZONE, PRESSURE ON SOIL GREATEST HERE.
- SELECT GRANULAR STRUCTURAL BACKFILL; INITIAL LIFTS OVER CROWN OF STRUCTURE AS INDICATED BY SHADED AREA TO BE COMPACTED TO REQUIRED DENSITY WITH HAND OPERATED EQUIPMENT OR WITH SMALL TRACTOR (D-4 OR SMALLER/LESS THAN 5 PSI) DRAWN EQUIPMENT.
- SELECT GRANULAR STRUCTURAL BACKFILL.

NOTES:

1. ALL SELECT GRANULAR BACKFILL TO BE PLACED IN A BALANCED FASHION IN THIN LIFTS (LOOSE TYPICALLY) AND COMPACTED TO 90 PERCENT DENSITY PER AASHTO T-180.
2. COMPLETE AND REGULAR MONITORING OF THE PEAR IS NECESSARY DURING ALL BACKFILLING STEPS.
3. PREVENT EXCESSIVE DISTORTION OF SHAPE AS NECESSARY BY VARYING COMPACTION METHODS AND EQUIPMENT.
4. SHAPED BED FOR A MINIMUM WIDTH OF TOP RADIUS/2. MINIMUM BEDDING THICKNESS IS 12 INCHES.

ADDITIONAL BACKFILL NOTES:

SATISFACTORY BACKFILL MATERIAL, PROPER PLACEMENT, AND COMPACTION ARE KEY FACTORS IN OBTAINING MAXIMUM STRENGTH AND STABILITY.

THE BACKFILL MATERIAL SHOULD BE FREE OF ROCKS, FROZEN LUMPS, AND FOREIGN MATERIAL THAT COULD CAUSE HARD SPOTS OR DECOMPOSE TO CREATE VOIDS. BACKFILL MATERIAL SHOULD BE WELL GRADED GRANULAR MATERIAL THAT MEETS THE REQUIREMENTS OF AASHTO M-145 FOR SOIL CLASSIFICATIONS A-1, A-2-4, A-2-5 MAXIMUM PARTICLE SIZE SHALL NOT EXCEED 3 INCHES.

BACKFILL MUST BE REPLACED SYMMETRICALLY ON EACH SIDE OF THE STRUCTURE IN 6" LOOSE LIFTS. EACH LIFT IS TO BE COMPACTED TO A MINIMUM OF 90% DENSITY PER AASHTO T-180 MODIFIED PROCTOR TEST.

A HIGH PERCENTAGE OF SILT OR FINE SAND IN THE NATIVE SOILS SUGGESTS THE NEED FOR A WELL GRADED GRANULAR BACKFILL MATERIAL TO PREVENT SOIL MIGRATION.

DURING BACKFILL, ONLY SMALL TRACKED VEHICLES (D-4 OR SMALLER) SHOULD BE NEAR THE STRUCTURE AS FILL PROGRESSES ABOVE THE CROWN AND TO THE FINISHED GRADE.

NOTE:
SEE "SHOP DRAWING PLANS - SHEET 7 OF 9" FOR REPLACEMENT DETAILS 5

GENERAL NOTES
LOAD AND RESISTANCE FACTOR DESIGN

DESIGN: AASHTO LRFD BRIDGE DESIGN SPECIFICATIONS, SIXTH EDITION WITH CALIFORNIA AMENDMENTS, PREFACE DATED JANUARY 2014. 6

SOIL: G = 140 pcf

SEISMIC LOADING:
SOIL PROFILE: TYPE D
SHEAR WAVE VELOCITY V_{S30} = 270 m/s
MOMENT MAGNITUDE: 7.2 MAX
PEAK GROUND ACCELERATION: 0.42g

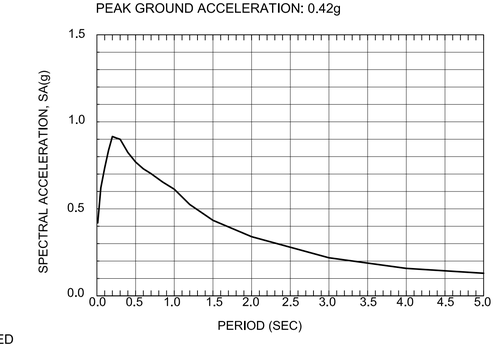

REINFORCED CONCRETE:
fy = 60 ksi
f'c = 3.6 ksi
n = 8

STRUCTURAL STEEL PLATE:
15" x 5½" CORRUGATIONS
fy = 44 ksi ASTM A 761
SEE "SHOP DRAWING PLANS". 1

AS-BUILT
RE/SR: K. TRAN
Date: 01/21/2017

COUNTY OF ORANGE CALIFORNIA

CONTRACT CHANGE ORDER NO. 18

MARK	DESCRIPTION	DATE	APPR.
7	DELETED DETAILS	1-30-15	QN
6	REVISED NOTE	1-30-15	QN
5	ADDED NOTE	1-30-15	QN
1	CHANGED STRUCTURE TYPE	1-30-15	QN

PREPARED UNDER THE RESPONSIBLE CHARGE OF:
REGISTERED PROFESSIONAL ENGINEER QUOC TRONG NGUYEN No.C71743 Exp.12/31/13 CIVIL STATE OF CALIFORNIA
Q. NGUYEN
RCE: C 71743 (EXP.12-31-13)
JULY 16, 2013
DATE

DESIGNED BY: QN
DRAWN BY: NL
CHECKED BY: JP
DRAWING CODE:
JOB NO. 11017
PLOT DATE: 11/06/2017
SCALE: AS SHOWN

COUNTY OF ORANGE
OC PUBLIC WORKS

TRC Engineers
10370 HEMET STREET, Suite 230
RIVERSIDE, CA 92503
Tel: (951) 687-1005

LA PATA AVENUE GAP CLOSURE
BRIDGE NO. 3

BACKFILL ZONE DETAIL

Sheet Reference Number
S3-2R1

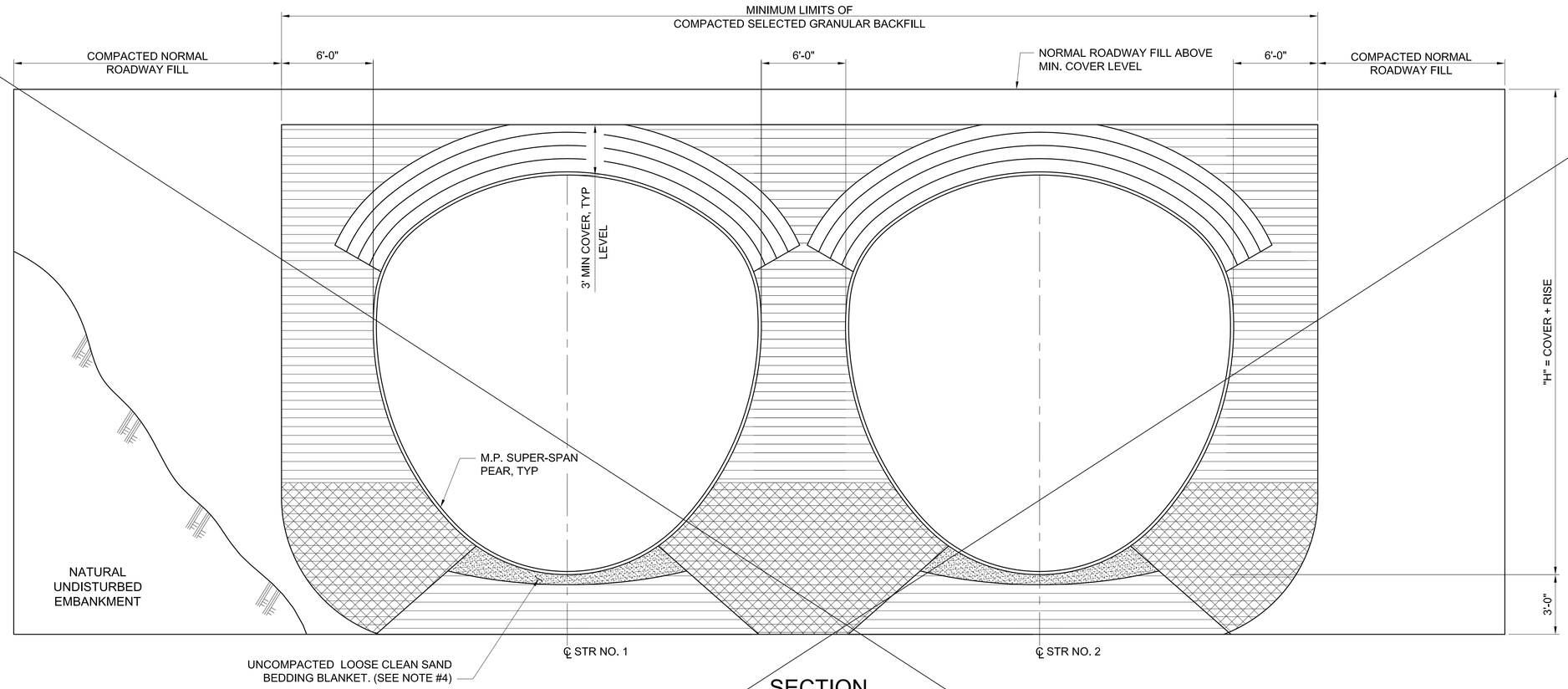

SECTION

LEGEND:

- SELECT GRANULAR STRUCTURAL BACKFILL; CRITICAL BACKFILL ZONE, PRESSURE ON SOIL GREATEST HERE.
- SELECT GRANULAR STRUCTURAL BACKFILL; INITIAL LIFTS OVER CROWN OF STRUCTURE AS INDICATED BY SHADED AREA TO BE COMPACTED TO REQUIRED DENSITY WITH HAND OPERATED EQUIPMENT OR WITH SMALL TRACTOR (D-4 OR SMALLER/LESS THAN 5 PSI) DRAWN EQUIPMENT.
- SELECT GRANULAR STRUCTURAL BACKFILL.

NOTES:

1. ALL SELECT GRANULAR BACKFILL TO BE PLACED IN A BALANCED FASHION IN THIN LIFTS (LOOSE TYPICALLY) AND COMPACTED TO 90 PERCENT DENSITY PER AASHTO T-180.
2. COMPLETE AND REGULAR MONITORING OF THE PEAR IS NECESSARY DURING ALL BACKFILLING STEPS.
3. PREVENT EXCESSIVE DISTORTION OF SHAPE AS NECESSARY BY VARYING COMPACTION METHODS AND EQUIPMENT.
4. SHAPED BED FOR A MINIMUM WIDTH OF TOP RADIUS/2. MINIMUM BEDDING THICKNESS IS 12 INCHES.

ADDITIONAL BACKFILL NOTES:

SATISFACTORY BACKFILL MATERIAL, PROPER PLACEMENT, AND COMPACTION ARE KEY FACTORS IN OBTAINING MAXIMUM STRENGTH AND STABILITY.

THE BACKFILL MATERIAL SHOULD BE FREE OF ROCKS, FROZEN LUMPS, AND FOREIGN MATERIAL THAT COULD CAUSE HARD SPOTS OR DECOMPOSE TO CREATE VOIDS. BACKFILL MATERIAL SHOULD BE WELL GRADED GRANULAR MATERIAL THAT MEETS THE REQUIREMENTS OF AASHTO M-145 FOR SOIL CLASSIFICATIONS A-1, A-2-4, A-2-5 MAXIMUM PARTICLE SIZE SHALL NOT EXCEED 3 INCHES.

BACKFILL MUST BE REPLACED SYMMETRICALLY ON EACH SIDE OF THE STRUCTURE IN 6" LOOSE LIFTS. EACH LIFT IS TO BE COMPACTED TO A MINIMUM OF 90% DENSITY PER AASHTO T-180 MODIFIED PROCTOR TEST.

A HIGH PERCENTAGE OF SILT OR FINE SAND IN THE NATIVE SOILS SUGGESTS THE NEED FOR A WELL GRADED GRANULAR BACKFILL MATERIAL TO PREVENT SOIL MIGRATION.

DURING BACKFILL, ONLY SMALL TRACKED VEHICLES (D-4 OR SMALLER) SHOULD BE NEAR THE STRUCTURE AS FILL PROGRESSES ABOVE THE CROWN AND TO THE FINISHED GRADE.

GENERAL NOTES
LOAD AND RESISTANCE FACTOR DESIGN

DESIGN: AASHTO LRFD BRIDGE DESIGN SPECIFICATIONS, FOURTH EDITION WITH CALIFORNIA AMENDMENTS, PREFACE DATED NOVEMBER 2011.

SOIL: G = 140 pcf

SEISMIC LOADING: SOIL PROFILE: TYPE D
SHEAR WAVE VELOCITY V_{S30} = 270 m/s
MOMENT MAGNITUDE: 7.2 MAX
PEAK GROUND ACCELERATION: 0.42g

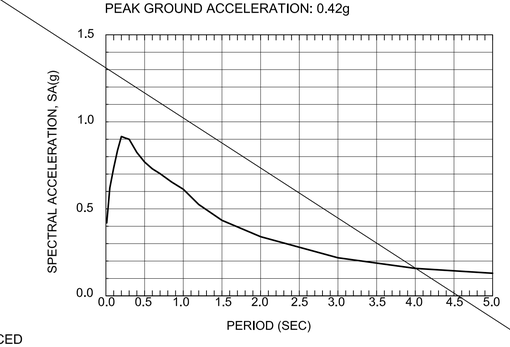

REINFORCED CONCRETE: fy = 60 ksi
f'c = 3.6 ksi
n = 8

STRUCTURAL STEEL PLATE: 6" x 2" ANNULAR CORRUGATIONS
fy = 33 ksi ASTM A 761
GAGE 1 INCLUDING GALVANIZATION

AS-BUILT
RE/SR: K. TRAN
Date: 01/21/2017

COUNTY OF ORANGE CALIFORNIA

MARK	DESCRIPTION	DATE	APPR.

PREPARED UNDER THE RESPONSIBLE CHARGE OF:

REGISTERED PROFESSIONAL ENGINEER QUYET TRONG NGUYEN No.C71743 Exp.12/31/13 CIVIL STATE OF CALIFORNIA

Q. NGUYEN
RCE: C 71743 (EXP.12-31-13)

JULY 16, 2013
DATE

DESIGNED BY: QN
DRAWN BY: NL
CHECKED BY: JP
DRAWING CODE:
JOB NO. 11017
PLOT DATE: 11/06/2017
SCALE: AS SHOWN

COUNTY OF ORANGE
OC PUBLIC WORKS

TENSI Engineers
10370 HEMET STREET, Suite 230
RIVERSIDE, CA 92503
Tel: (951) 687-1005

LA PATA AVENUE GAP CLOSURE
BRIDGE NO. 3

BACKFILL ZONE DETAIL

Sheet Reference Number

S3-2

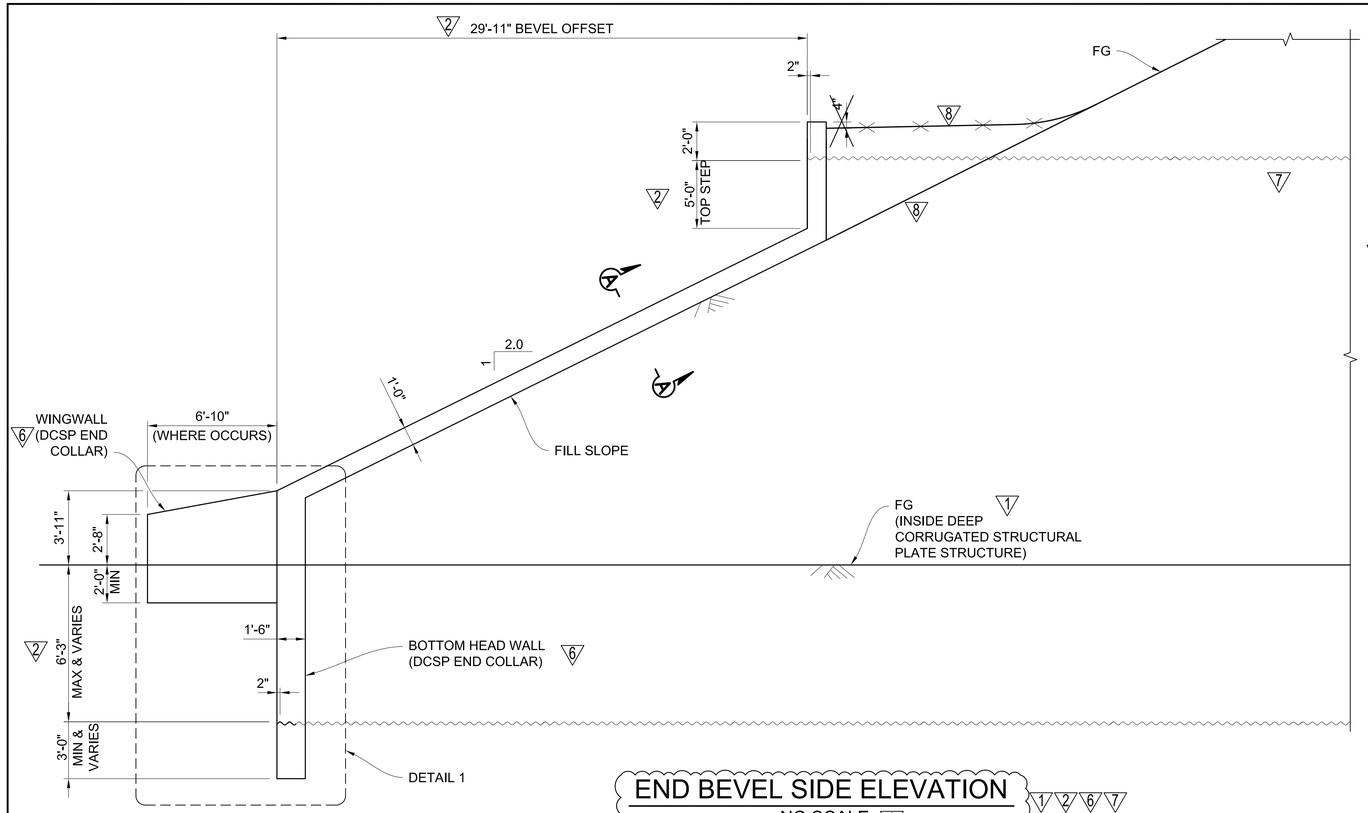

END BEVEL SIDE ELEVATION

NO SCALE

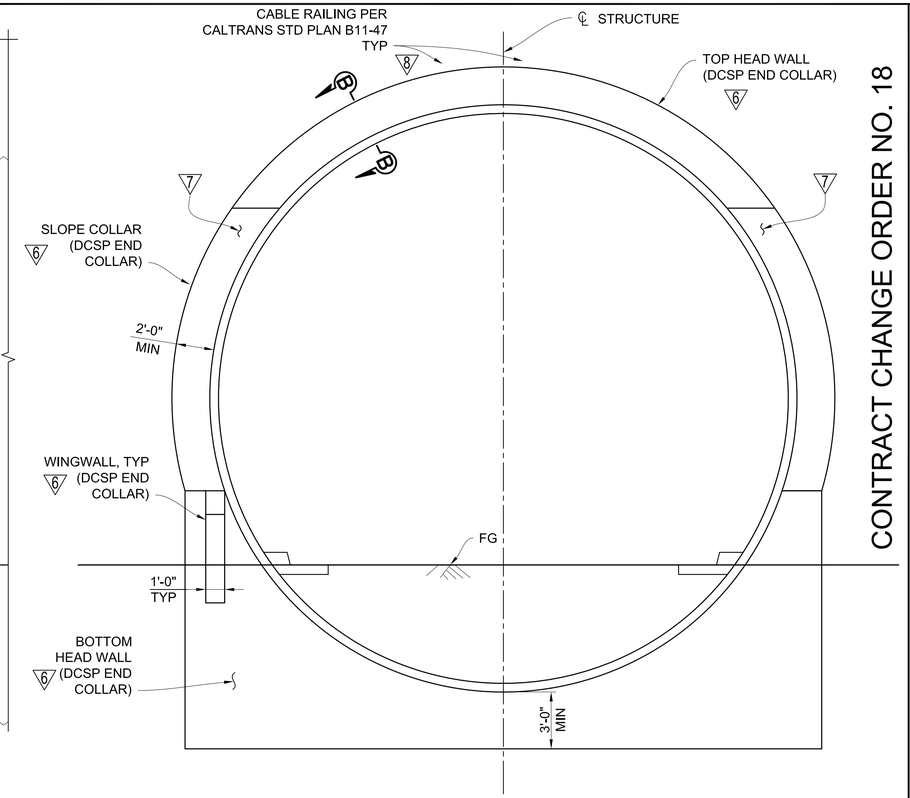

NOTE: STR NO.1 SHOWN, STR. NO.2 SIMILAR.

STRUCTURE END ELEVATION

1/4" = 1'-0"

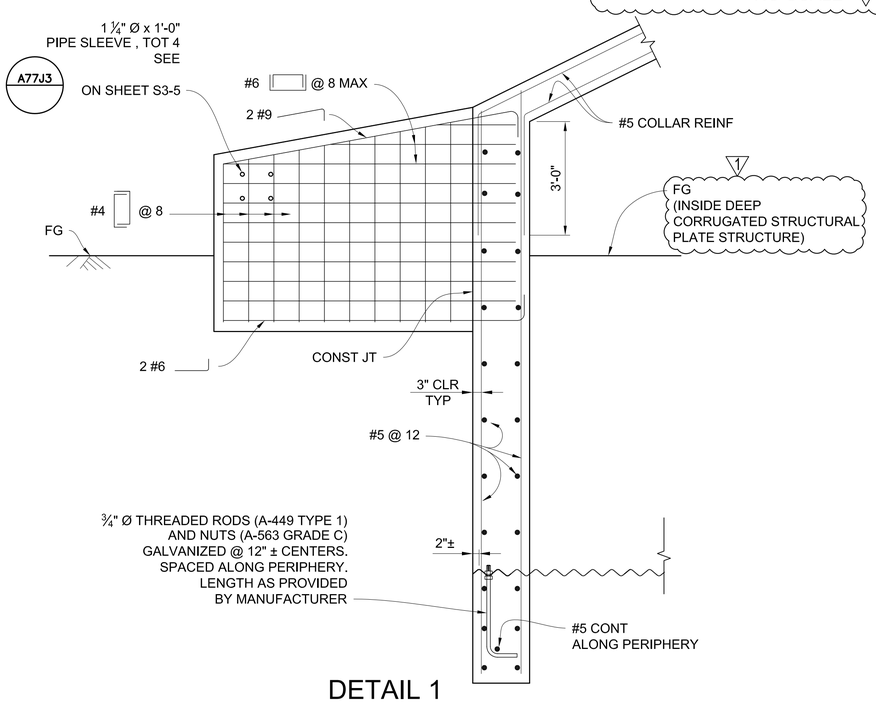

DETAIL 1

NO SCALE

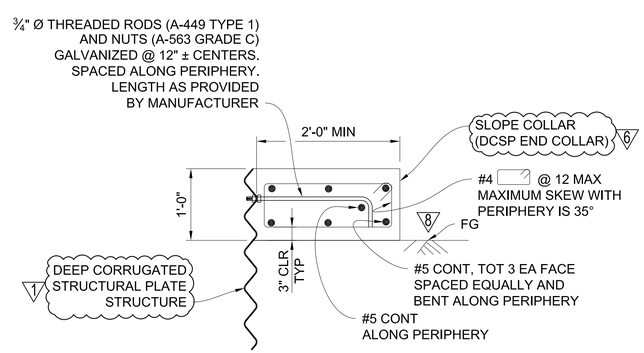

SECTION A-A

NO SCALE

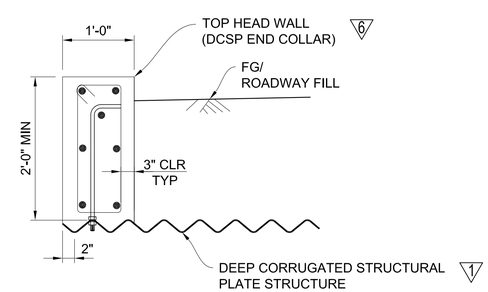

NOTE: FOR INFORMATION NOT SHOWN, SEE SECTION A-A.

SECTION B-B

NO SCALE

AS-BUILT
RE/SR: K. TRAN
Date: 01/21/2017

NOTES:
THE STRUCTURE END TREATMENT DETAILS ON THIS SHEET ARE COPIED AND MODIFIED FROM CALTRANS STANDARD PLANS A77J3 AND B14-1 FOR BIDING PURPOSE, THE CONTRACTOR SHALL PROVIDE THE STRUCTURE END TREATMENT DETAILS WITH SUPPORTING CALCULATIONS BASED ON THE ACTUAL STRUCTURAL CORRUGATED STEEL MATERIAL USED IN THE PROJECT.

CONTRACT CHANGE ORDER NO. 18

COUNTY OF ORANGE CALIFORNIA

MARK	DESCRIPTION	DATE	APPR.
8	RECORDED DRAWING	1-21-17	QN
7	DELETED DETAILS	1-30-15	QN
6	REVISED NOTE	1-30-15	QN
2	ADJUSTED DIMENSION	1-30-15	QN
1	CHANGED STRUCTURE TYPE	1-30-15	QN

REGISTERED PROFESSIONAL ENGINEER QUOC TRONG NGUYEN No.C71743 Exp.12/31/13 CIVIL STATE OF CALIFORNIA

PREPARED UNDER THE RESPONSIBLE CHARGE OF:
Q. NGUYEN
RCE: C 71743 (EXP.12-31-13)
JULY 16, 2013
DATE

DESIGNED BY: QN
CHECKED BY: JP
DRAWN BY: NL
DRAWING CODE:
JOB NO. 11017
SCALE: AS SHOWN
PLOT DATE: 11/06/2017

COUNTY OF ORANGE
OC PUBLIC WORKS

TCNST Engineers
10370 HEMET STREET, Suite 230
RIVERSIDE, CA 92503
Tel: (951) 687-1005

LA PATA AVENUE GAP CLOSURE
BRIDGE NO. 3

STRUCTURE END
TREATMENT DETAILS

Sheet
Reference
Number

S3-3R1

257R1 OF 492

W:\11017 La Pata Ave Gap Closure\Construction Support\As-builts\Bridge No. 3\as built 20150227 - Copy\S3-3 - End Structure Treatment Details.dwg, Layout: S3-3 - Structure End Treatment Details, Nov 06 2017 2:55pm

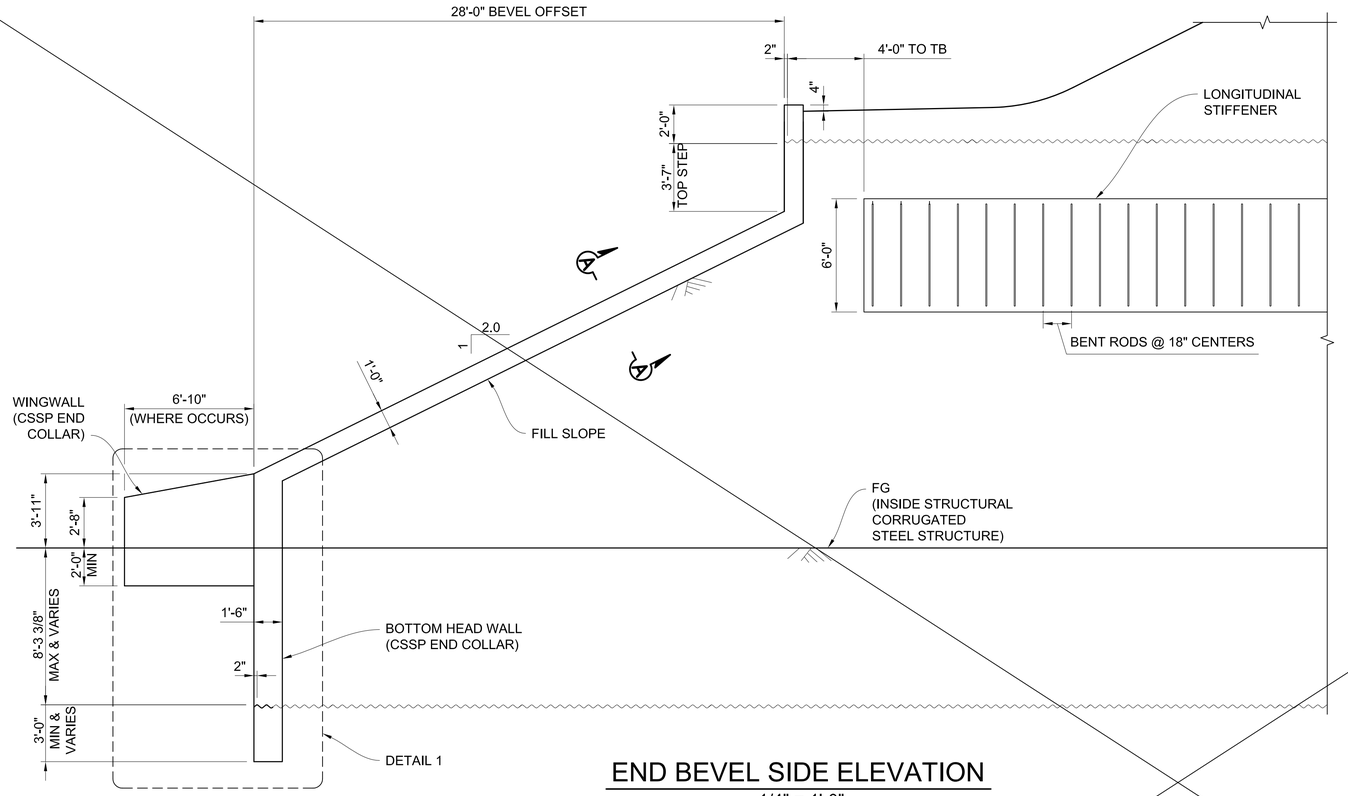

END BEVEL SIDE ELEVATION

1/4" = 1'-0"

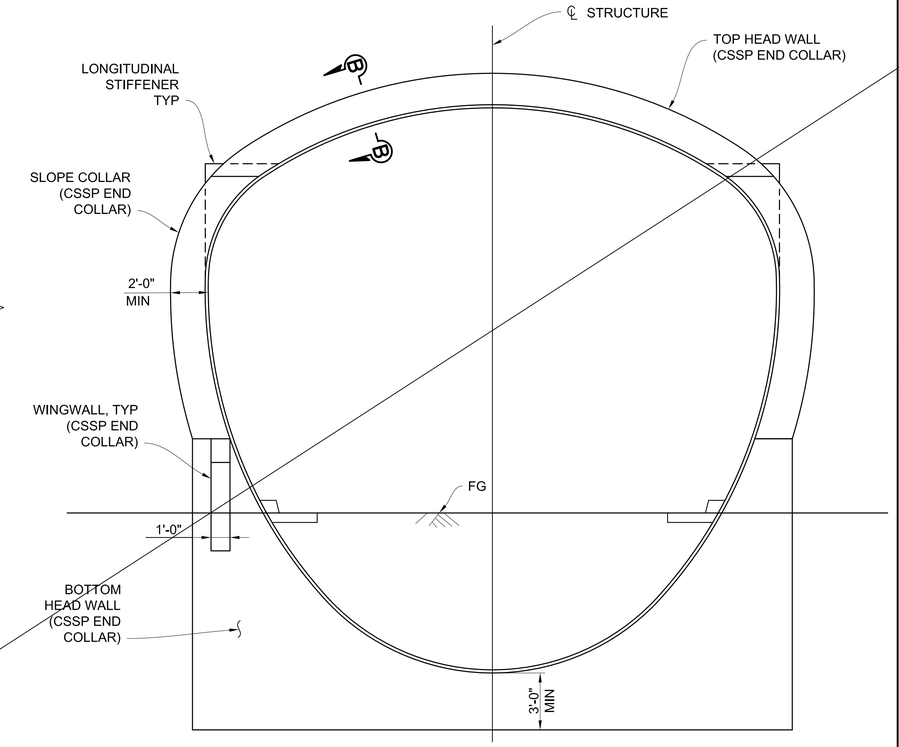

NOTE: STR NO.1 SHOWN, STR. NO.2 SIMILAR.

STRUCTURE END ELEVATION

1/4" = 1'-0"

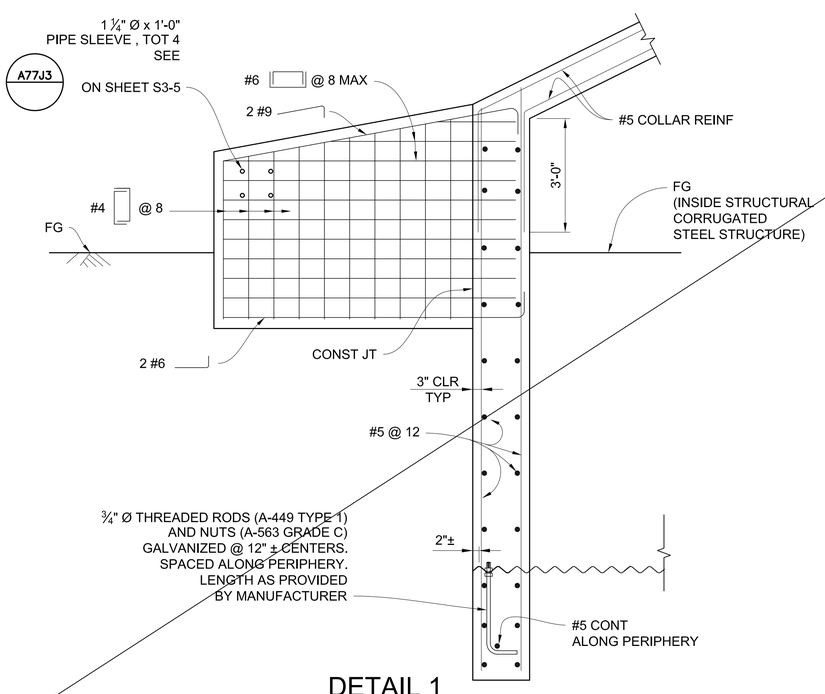

DETAIL 1

NO SCALE

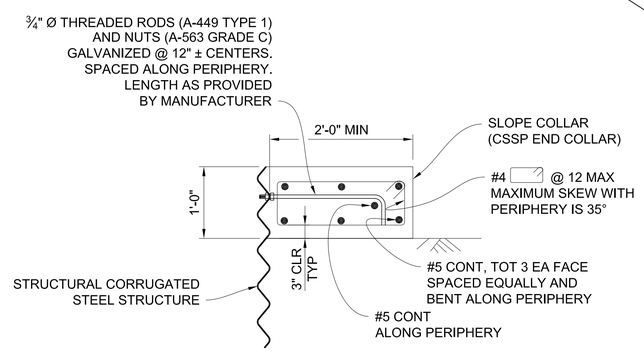

SECTION A-A

NO SCALE

AS-BUILT
RE/SR: K. TRAN
Date: 01/21/2017

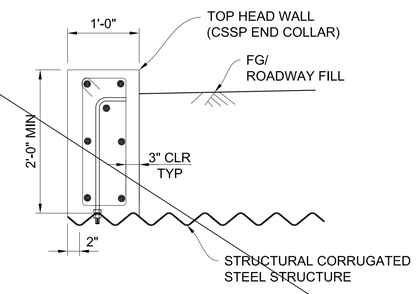

NOTE: FOR INFORMATION NOT SHOWN, SEE SECTION A-A.

SECTION B-B

NO SCALE

NOTES:
THE STRUCTURE END TREATMENT DETAILS ON THIS SHEET ARE COPIED AND MODIFIED FROM CALTRANS STANDARD PLANS A77J3 AND B14-1 FOR BIDING PURPOSE, THE CONTRACTOR SHALL PROVIDE THE STRUCTURE END TREATMENT DETAILS WITH SUPPORTING CALCULATIONS BASED ON THE ACTUAL STRUCTURAL CORRUGATED STEEL MATERIAL USED IN THE PROJECT.

COUNTY OF ORANGE CALIFORNIA

MARK	DESCRIPTION	DATE	APPR.

PREPARED UNDER THE RESPONSIBLE CHARGE OF:
REGISTERED PROFESSIONAL ENGINEER QUYET TRONG NGUYEN No.C71743 Exp.12/31/13 CIVIL STATE OF CALIFORNIA
Q. NGUYEN
RCE: C 71743 (EXP.12-31-13)
JULY 16, 2013
DATE

DESIGNED BY: QN
DRAWN BY: NL
CHECKED BY: JP
DRAWING CODE:
JOB NO. 11017
PLOT DATE: 11/06/2017
SCALE: AS SHOWN

COUNTY OF ORANGE
OC PUBLIC WORKS

TCNST Engineers Inc.
10370 HEMET STREET, RIVERSIDE, CA 92503, Suite 230
Tel: (951) 687-1005

LA PATA AVENUE GAP CLOSURE
BRIDGE NO. 3

STRUCTURE END TREATMENT DETAILS

Sheet Reference Number

S3-3

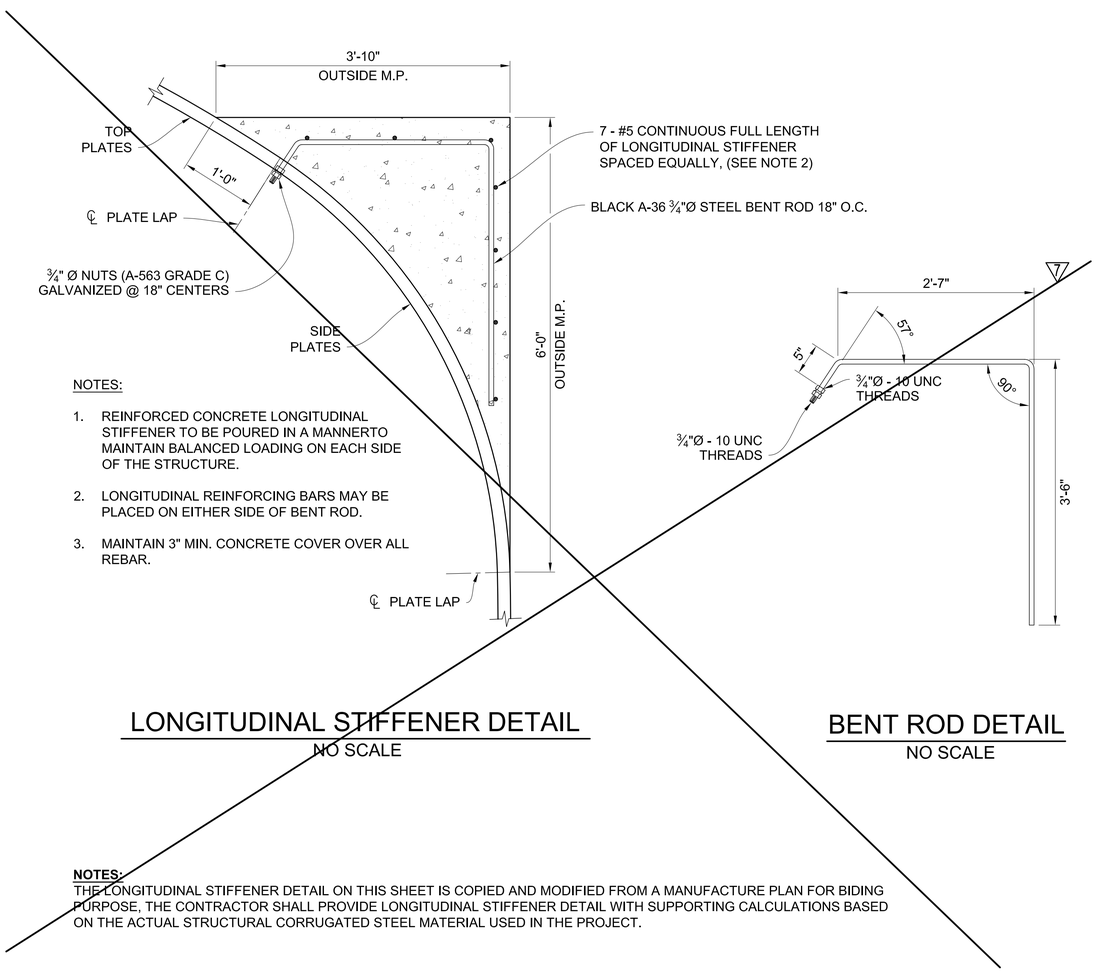

NOTES:

1. REINFORCED CONCRETE LONGITUDINAL STIFFENER TO BE POURED IN A MANNERTO MAINTAIN BALANCED LOADING ON EACH SIDE OF THE STRUCTURE.
2. LONGITUDINAL REINFORCING BARS MAY BE PLACED ON EITHER SIDE OF BENT ROD.
3. MAINTAIN 3" MIN. CONCRETE COVER OVER ALL REBAR.

LONGITUDINAL STIFFENER DETAIL

NO SCALE

BENT ROD DETAIL

NO SCALE

NOTES:
THE LONGITUDINAL STIFFENER DETAIL ON THIS SHEET IS COPIED AND MODIFIED FROM A MANUFACTURE PLAN FOR BIDING PURPOSE, THE CONTRACTOR SHALL PROVIDE LONGITUDINAL STIFFENER DETAIL WITH SUPPORTING CALCULATIONS BASED ON THE ACTUAL STRUCTURAL CORRUGATED STEEL MATERIAL USED IN THE PROJECT.

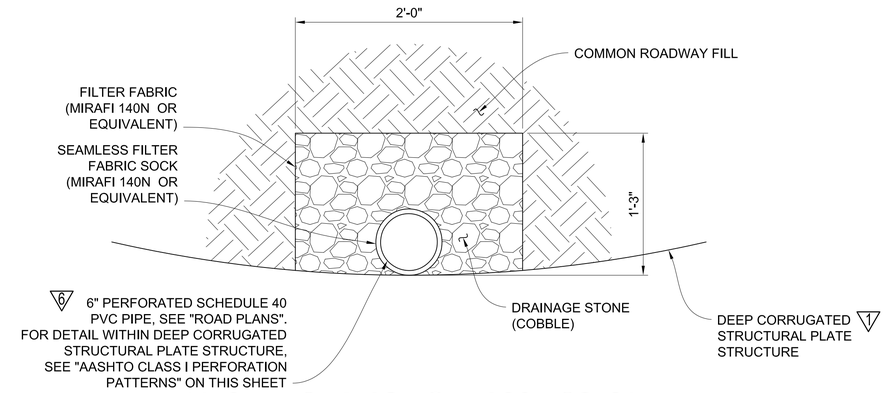

TYPICAL SUBDRAIN PILE SECTION

NO SCALE

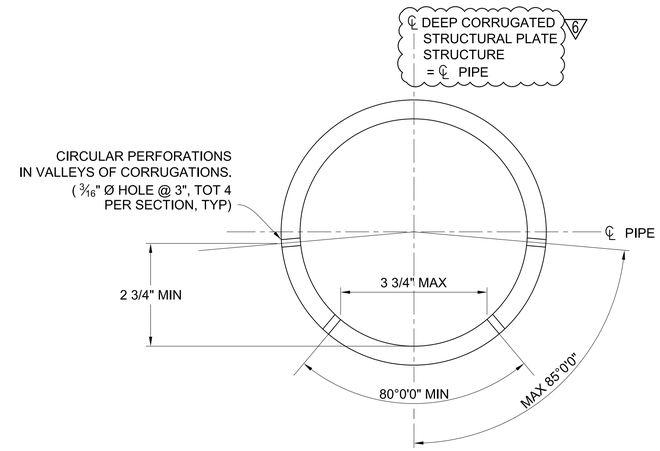

AASHTO CLASS I PERFORATION PATTERNS

6" = 1'-0"

AS-BUILT
RE/SR: K. TRAN
Date: 01/21/2017

COUNTY OF ORANGE CALIFORNIA

CONTRACT CHANGE ORDER NO. 18

MARK	DESCRIPTION	DATE	APPR.
7	DELETED DETAILS	1-30-15	QN
6	REVISED NOTE	1-30-15	QN
1	CHANGED STRUCTURE TYPE	1-30-15	QN

PREPARED UNDER THE RESPONSIBLE CHARGE OF:
Q. NGUYEN
RCE: C 71743 (EXP.12-31-13)
JULY 16, 2013
DATE

REGISTERED PROFESSIONAL ENGINEER QUYET TRONG NGUYEN No.C71743 Exp.12/31/13 CIVIL STATE OF CALIFORNIA

DESIGNED BY: QN
CHECKED BY: JP
DRAWN BY: NL
DRAWING CODE:
JOB NO. 11017
SCALE: AS SHOWN
PLOT DATE: 11/06/2017

COUNTY OF ORANGE
OC PUBLIC WORKS

TENSI Engineers
10370 HEMET STREET, Suite 230
RIVERSIDE, CA 92503
Tel: (951) 687-1005

LA PATA AVENUE GAP CLOSURE
BRIDGE NO. 3

MISCELLANEOUS DETAILS

Sheet Reference Number

S3-4R1

258R1 OF 492

M:\11017 La Pata Ave Gap Closure\Construction Supports\As-builts\Bridge No. 3\as built 20150217 - Copy\S3-4 - Miscellaneous Details.dwg, Layout: Miscellaneous Details, Nov 06 2017 2:53pm

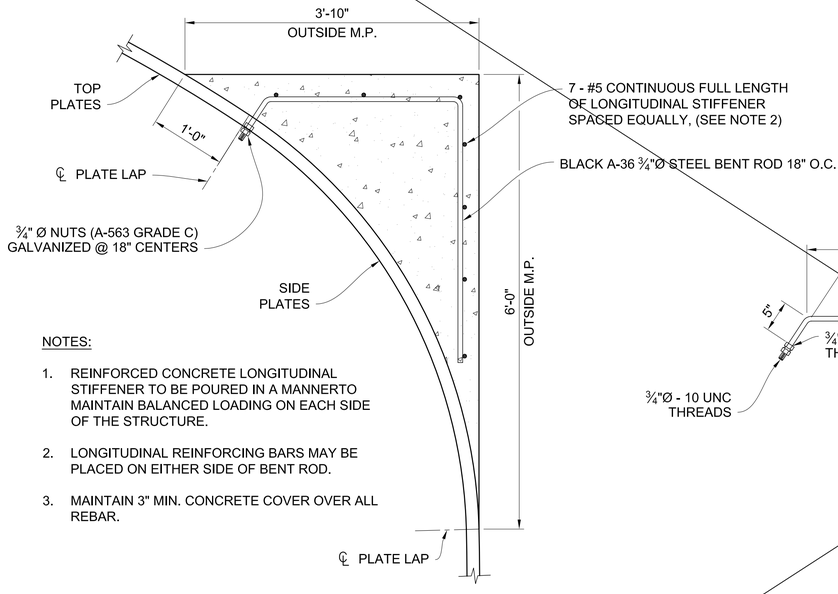

NOTES:

1. REINFORCED CONCRETE LONGITUDINAL STIFFENER TO BE POURED IN A MANNERTO MAINTAIN BALANCED LOADING ON EACH SIDE OF THE STRUCTURE.
2. LONGITUDINAL REINFORCING BARS MAY BE PLACED ON EITHER SIDE OF BENT ROD.
3. MAINTAIN 3" MIN. CONCRETE COVER OVER ALL REBAR.

LONGITUDINAL STIFFENER DETAIL

NO SCALE

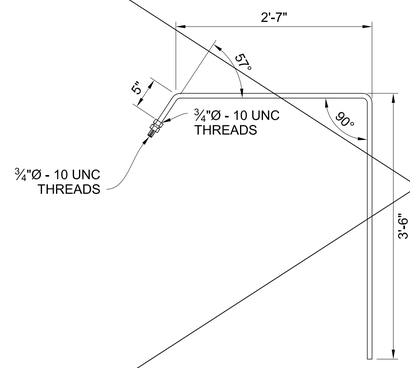

BENT ROD DETAIL

NO SCALE

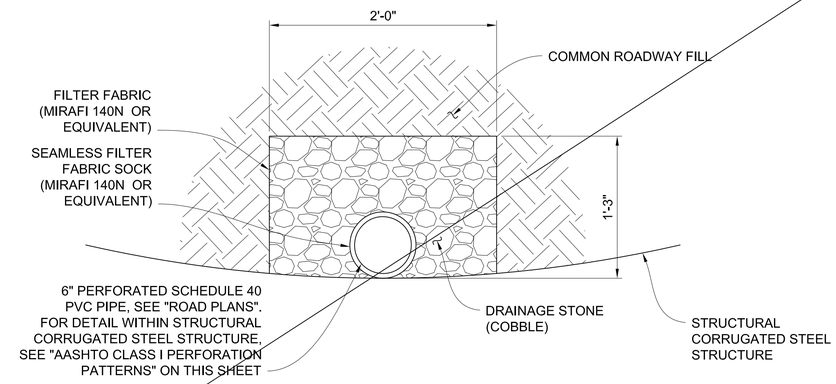

TYPICAL SUBDRAIN PILE SECTION

NO SCALE

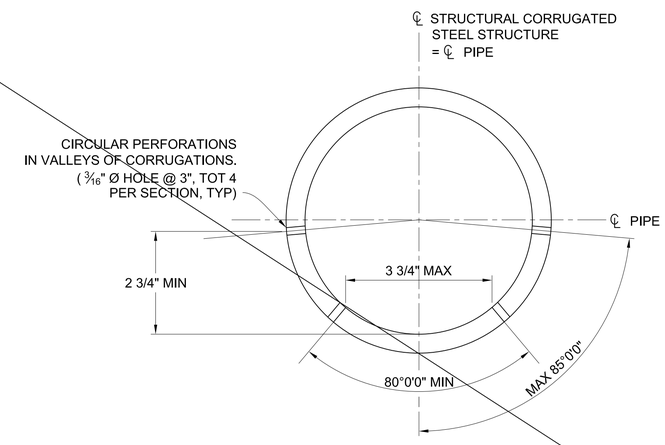

AASHTO CLASS I PERFORATION PATTERNS

6" = 1'-0"

NOTES:
THE LONGITUDINAL STIFFENER DETAIL ON THIS SHEET IS COPIED AND MODIFIED FROM A MANUFACTURE PLAN FOR BIDING PURPOSE, THE CONTRACTOR SHALL PROVIDE LONGITUDINAL STIFFENER DETAIL WITH SUPPORTING CALCULATIONS BASED ON THE ACTUAL STRUCTURAL CORRUGATED STEEL MATERIAL USED IN THE PROJECT.

AS-BUILT
RE/SR: K. TRAN
Date: 01/21/2017

COUNTY OF ORANGE CALIFORNIA

MARK	DESCRIPTION	DATE	APPR.

REGISTERED PROFESSIONAL ENGINEER QUYET TRONG NGUYEN No.C71743 Exp.12/31/13 CIVIL STATE OF CALIFORNIA

PREPARED UNDER THE RESPONSIBLE CHARGE OF:
Q. NGUYEN
RCE: C 71743 (EXP.12-31-13)
JULY 16, 2013
DATE

DESIGNED BY: QN
DRAWN BY: NL
CHECKED BY: JP
DRAWING CODE:
JOB NO. 11017
PLOT DATE: 11/06/2017
SCALE: AS SHOWN

COUNTY OF ORANGE
OC PUBLIC WORKS

TENSI Engineers
10370 HEMET STREET, Suite 230
RIVERSIDE, CA 92503
Tel: (951) 687-1005

LA PATA AVENUE GAP CLOSURE
BRIDGE NO. 3

MISCELLANEOUS DETAILS

Sheet Reference Number
S3-4

DIst.	COUNTY	ROUTE	POST MILES TOTAL PROJECT	SHEET No.	TOTAL SHEETS

REGISTERED CIVIL ENGINEER — May 20, 2011 — PLANS APPROVAL DATE

REGISTERED PROFESSIONAL ENGINEER — Randall D. Hiatt — No. C56000 — Exp. 6-30-11 — CIVIL — STATE OF CALIFORNIA

THE STATE OF CALIFORNIA OR ITS OFFICERS OR AGENTS SHALL NOT BE RESPONSIBLE FOR THE ACCURACY OR COMPLETENESS OF SCANNED COPIES OF THIS PLAN SHEET.

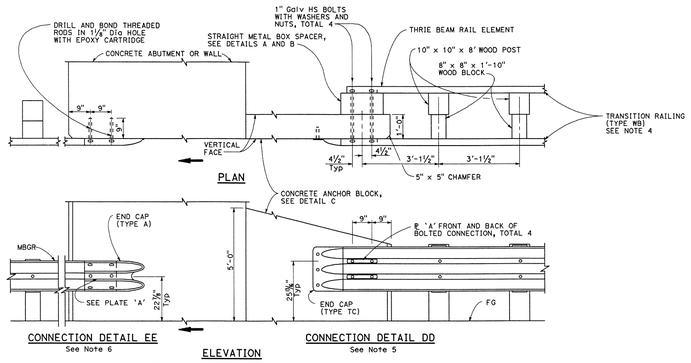

GUARD RAILING CONNECTION TO ABUTMENT OR WALL

NOTES:

1. These connection details apply to abutments and walls.
2. Additional details of posts, blocks and hardware are shown on Standard Plans A77B1, A77C1 and A77C2.
3. Direction of adjacent traffic indicated by ⟶.
4. For additional details of Transition Railing (Type WB), see Standard Plan A77J4 Transition Railing (Type WB) transitions the 12 gauge w-beam standard railing section of guard railing to a heavier gage nested thrie beam railing section which is connected to the concrete anchor block.
5. For typical use of Connection Details DD, See Layout Types 12A and 12B on Standard Plan A77F1 and Layout Types 12C and 12D on Standard Plan A77F2.
6. For typical use of Connection Detail EE, see Layout Type 12D on Standard Plan A77F2 and Layout Type 12DD on Standard Plan A77F5.

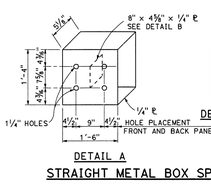

DETAIL A
STRAIGHT METAL BOX SPACER

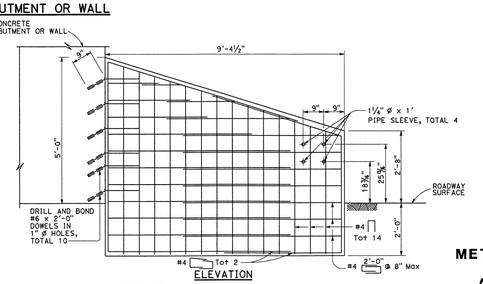

ANCHOR BLOCK FOR TRANSITION RAILING CONNECTION
DETAIL C

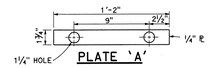

PLATE 'A'

STATE OF CALIFORNIA
DEPARTMENT OF TRANSPORTATION

METAL BEAM GUARD RAILING CONNECTIONS TO ABUTMENTS AND WALLS

NO SCALE

A77J3

2010 STANDARD PLAN A77J3

DIst.	COUNTY	ROUTE	POST MILES TOTAL PROJECT	SHEET No.	TOTAL SHEETS

REGISTERED CIVIL ENGINEER — May 20, 2011 — PLANS APPROVAL DATE

REGISTERED PROFESSIONAL ENGINEER — Dustin Forrester — No. C37765 — Exp. 12-31-12 — CIVIL — STATE OF CALIFORNIA

THE STATE OF CALIFORNIA OR ITS OFFICERS OR AGENTS SHALL NOT BE RESPONSIBLE FOR THE ACCURACY OR COMPLETENESS OF SCANNED COPIES OF THIS PLAN SHEET.

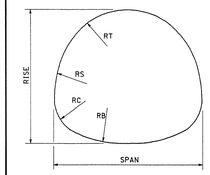

DESIGN NOTES:

Design: AASHTO LRFD Bridge Design Specifications, 4th edition with California Amendments.

Soil: γ = 140 pcf

Reinforced Concrete: f'_c = 60 ksi; n = 8; f'_c = 3.6 ksi

Structural Steel Plate: 6" x 2" Annular Corrugations; f_y = 33 ksi; Specified thickness includes galvanization

NOTES:

A. For strutting requirements of structural steel plate vehicular undercrossing during construction, see Standard Plan D88A.

B. Minimum cover from crown to shoulder hinge point = 5'-0".

C. Backfill shall be brought up uniformly on both sides of the structure.

D. Minimum cover for construction loading, see Standard Plan D88.

MAXIMUM HEIGHT OF FILL										LAYOUT DATA			
GAGE		12	10	12	10	8	5	3	1				
THICKNESS		0.110"	0.140"	0.110"	0.140"	0.170"	0.218"	0.249"	0.280"				
SPAN	RISE	SOIL PRESSURE 6.0 ksf		FOR SOIL PRESSURES SEE TABLE A						RT	RS	RC	RB
12'-2"	11'-0"	14.0'	14.0'	14.0'	25.0'	31.0'	44.0'	53.0'	58.0'	5'-8"	7'-9"	3'-2"	11'-2"
12'-11"	11'-3"	13.0'	13.0'	13.0'	24.0'	29.0'	42.0'	49.0'	55.0'	6'-1"	7'-11"	3'-2"	12'-0"
13'-2"	11'-11"	13.0'	13.0'	13.0'	23.0'	28.0'	41.0'	48.0'	54.0'	6'-1"	8'-7"	3'-2"	13'-3"
13'-10"	12'-3"	12.0'	12.0'	12.0'	22.0'	27.0'	39.0'	46.0'	51.0'	6'-5"	9'-0"	3'-2"	13'-8"
14'-1"	12'-10"	12.0'	12.0'	12.0'	21.0'	26.0'	38.0'	45.0'	50.0'	6'-5"	9'-7"	3'-2"	15'-2"
14'-6"	13'-6"	11.0'	11.0'	11.0'	20.0'	25.0'	37.0'	44.0'	48.0'	6'-6"	10'-11"	3'-2"	14'-6"
14'-10"	14'-0"	11.0'	11.0'	11.0'	20.0'	24.0'	36.0'	42.0'	47.0'	6'-7"	11'-4"	3'-2"	16'-0"
15'-6"	14'-4"	10.0'	10.0'	10.0'	19.0'	23.0'	34.0'	40.0'	45.0'	7'-0"	11'-6"	3'-2"	16'-9"
15'-9"	15'-1"	10.0'	10.0'	10.0'	18.0'	22.0'	33.0'	40.0'	44.0'	6'-11"	12'-6"	3'-2"	17'-8"
16'-4"	15'-5"	9.0'	9.0'	9.0'	18.0'	22.0'	32.0'	38.0'	42.0'	7'-2"	13'-1"	3'-2"	17'-11"
16'-5"	16'-1"	8.0'	8.0'	8.0'	17.0'	21.0'	31.0'	37.0'	41.0'	7'-4"	13'-2"	3'-2"	22'-7"
16'-9"	16'-3"	8.0'	8.0'	9.0'	17.0'	20.0'	30.0'	36.0'	40.0'	7'-5"	13'-11"	3'-2"	20'-7"
17'-3"	17'-0"	11.0'	11.0'	8.0'	16.0'	20.0'	29.0'	36.0'	39.0'	7'-6"	14'-6"	3'-11"	17'-11"
18'-4"	16'-11"	10.0'	10.0'	6.0'	15.0'	19.0'	28.0'	33.0'	37.0'	8'-3"	13'-1"	3'-11"	20'-9"
19'-2"	17'-2"		9.0'		14.0'	18.0'	26.0'	32.0'	35.0'	8'-9"	13'-0"	3'-11"	22'-0"
19'-6"	17'-7"		9.0'		14.0'	17.0'	25.0'	31.0'	34.0'	8'-11"	13'-2"	3'-11"	24'-9"
20'-4"	17'-10"		9.0'		13.0'	16.0'	24.0'	29.0'	32.0'	9'-5"	13'-0"	3'-11"	26'-2"

Structures require strutting for fill heights below heavy lines. See Note A.

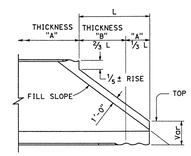

SIDE ELEVATION

NOTE:

Thickness "B" two thicknesses greater than thickness "A" except for 0.249" and 0.280" thicknesses.

Skew-bevels not permitted with Alternative 1. Cutoff dimensions are approximate only and may be varied by fabricator to suit plate layout.

ALTERNATIVE 1

TABLE A						
GAGE	12	10	8	5	3	1
THICKNESS	0.110"	0.140"	0.170"	0.218"	0.249"	0.280"
SPANS	STRENGTH I SOIL PRESSURE (ksf)					
12'-2" TO 16'-9"	6.0	10.0	12.0	17.0	20.0	22.0
17'-3" TO 20'-4"	4.9	8.1	9.7	13.7	16.2	17.8

¾" ø HOOK BOLTS @ 2'-0"± CENTERS. LENGTH AS PROVIDED BY MANUFACTURER.

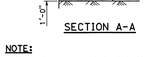

SECTION A-A

NOTE:

Reinforce both faces of concrete collar with #4 @ 12 both ways. Maximum skew is 35°.

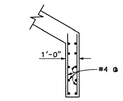

DETAIL B

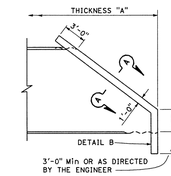

SIDE ELEVATION

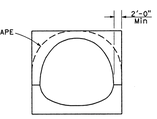

END ELEVATION

ALTERNATIVE 2

END BEVELS

STATE OF CALIFORNIA
DEPARTMENT OF TRANSPORTATION

STRUCTURAL STEEL PLATE VEHICULAR UNDERCROSSING

NO SCALE

B14-1

2010 STANDARD PLAN B14-1

AS-BUILT
RE/SR: K. TRAN
Date: 01/21/2017

COUNTY OF ORANGE
CALIFORNIA

MARK	DESCRIPTION	DATE	APPR.

REGISTERED PROFESSIONAL ENGINEER — QUOC TRUNG NGUYEN — No. C71743 — Exp. 12/31/13 — CIVIL — STATE OF CALIFORNIA

PREPARED UNDER THE RESPONSIBLE CHARGE OF:

Q. NGUYEN
RCE C 71743 (EXP.12-31-13)
JULY 16, 2013
DATE

DESIGNED BY: GNG
DRAWN BY: NL
CHECKED BY: GR
DRAWING CODE:
JOB NO. 11017
PLOT DATE: 11/06/2017
SCALE: AS SHOWN

COUNTY OF ORANGE
OC PUBLIC WORKS

TetraTech Engineers
10370 HEMET STREET, Suite 230
RIVERSIDE, CA 92503
Tel: (951) 687-1005

LA PATA AVENUE GAP CLOSURE
BRIDGE NO. 3

CALTRANS STANDARD PLANS

Sheet Reference Number

S3-5

w:\11017 La Pata Ave Gap Closure\Construction Supports\As-builts\Bridge No. 3\as built 07152013 - Copy\S3-5 - Standard Plans.dwg, Layout: Standard Plans, Nov 06 2017 3:07pm

N:\CACADD\O\ORANGE COUNTY\ORANGE COUNTY-HG1315_GROUND\FDR_B3\1315FDR3-I1-1.dwg 7/12/13 12:08

CONSISTENCY CLASSIFICATION FOR SOILS

ACCORDING TO THE STANDARD PENETRATION TEST (ASTM D-1586)

SPT N-VALUE / BLOWS / FEET		GRANULAR	SPT N-VALUE / BLOWS / FEET	COHESIVE
0 - 4	VERY LOOSE		< 2	VERY SOFT
5 - 10	LOOSE		2 - 4	SOFT
11 - 30	MEDIUM DENSE		5 - 9	FIRM
31 - 50	DENSE		9 - 15	STIFF
> 50	VERY DENSE		16 - 30	VERY STIFF
			> 30	HARD

NOTE: VISUAL CLASSIFICATIONS OF EARTH MATERIALS ARE BASED ON FIELD INSPECTION AND ARE CONFIRMED OR REVISED WITH LABORATORY TEST RESULTS AS NECESSARY.

LEGEND OF EARTH MATERIALS (USCS) BASED ON ASTM D2487, D2488

CLAY; SILT; SAND; GRAVEL; SILTY CLAY; CLAYEY SILT; PEAT; SEDIMENTARY ROCK; CLAYEY SAND; METAMORPHIC ROCK; SILTY SAND; GNEOUS ROCK; ORGANIC SOIL

TYPES OF BORINGS

- 2 1/4" CONE PENETROMETER
- SONIC CORE
- ROTARY SAMPLE BORING (DRY)
- ROTARY SAMPLE BORING (WET)
- AUGER BORING (DRY)
- TEST PIT
- DIAMOND CORE BORING
- JET BORING
- FLAT CONE CORE PENETROMETER

IN-STU, LAB & FIELD TEST DESIGNATIONS

C	CONSOLIDATION (ASTM D 2435)
CL	COLLAPSE POTENTIAL (ASTM D 5333)
CR	CORROSIVITY TESTING (CTM 643, CTM 422, CTM 417)
CU	CHEMICAL SUITE (MINERAL AND SOIL)
DS	DIRECT SHEAR (ASTM D 3080)
EI	EXPANSION INDEX (ASTM D 4829)
M	MOISTURE CONTENT (ASTM D 2216)
PA	PARTICLE SIZE ANALYSIS (ASTM D 422)
PI	PLASTICITY INDEX (AASHTO T 90) LIQUID LIMIT (AASHTO T 89)
R	R-VALUE (CTM 301)
SE	SAND EQUIVALENT (CTM 217)
SG	SPECIFIC GRAVITY (AASHTO T 100)
SL	SHRINKAGE LIMIT (ASTM D 427)
SW	SWELL POTENTIAL (ASTM D 4546)
UC	UNCONFINED COMPRESSIVE STRENGTH (ASTM D 2166)
UU	UNCONSOLIDATED UNDRAINED TRIAXIAL (ASTM D 2850)

ROTARY BORING

Hole I.D. | Location | Top Hole El. | Description of material (Using 28 lb hand hammer with 12 in. drop or as noted) | Blows per 12 in. (Using 28 lb hand hammer with 12 in. drop or as noted) | Pulled Pipe | Refusal | Boring Date | Terminated at Elev | Hammer Drop (lb) | Casing driven to (Size or Diameter (Inches)) | SPT N-Value (per ASTM 1586-99) | Field & Lab Tests | Water encountered | Estimated material change | Soil/Rock boundary

HAND BORING

Hole I.D. | Location | Top Hole El. | Grand water depth | Date Measured | Elev. | Sample | Sample depth | Description of material | Blows per 12 in. (Using 28 lb hand hammer with 12 in. drop or as noted) | Pushed | Refusal | Boring Date | Terminated at Elev

DYNAMIC CONE PENETRATION BORING

Hole I.D. | Location | Top Hole El. | Grand water depth | Date Measured | Elev. | Date Measured | No count recorded | Pushed | Driving rate in. (using a 2 in. diameter cone with a 2 in. hammer drop of 22 in. cone, or as noted) | Refusal | Boring Date | Terminated at Elev

CONE PENETRATION TEST (CPT) BORING

Hole I.D. | Location | Top Hole El. | Pressure measured during sleeve friction element (34.85 in. area) divided by pressure measured on tip element. | Friction Ratio (%) | Tip Bearing (MPa) | Pressure measured on tip element (2.33 in. area) | Boring Date | Terminated at Elev

BENCHMARK

GPS USED FOR ELEVATION NVGD 29

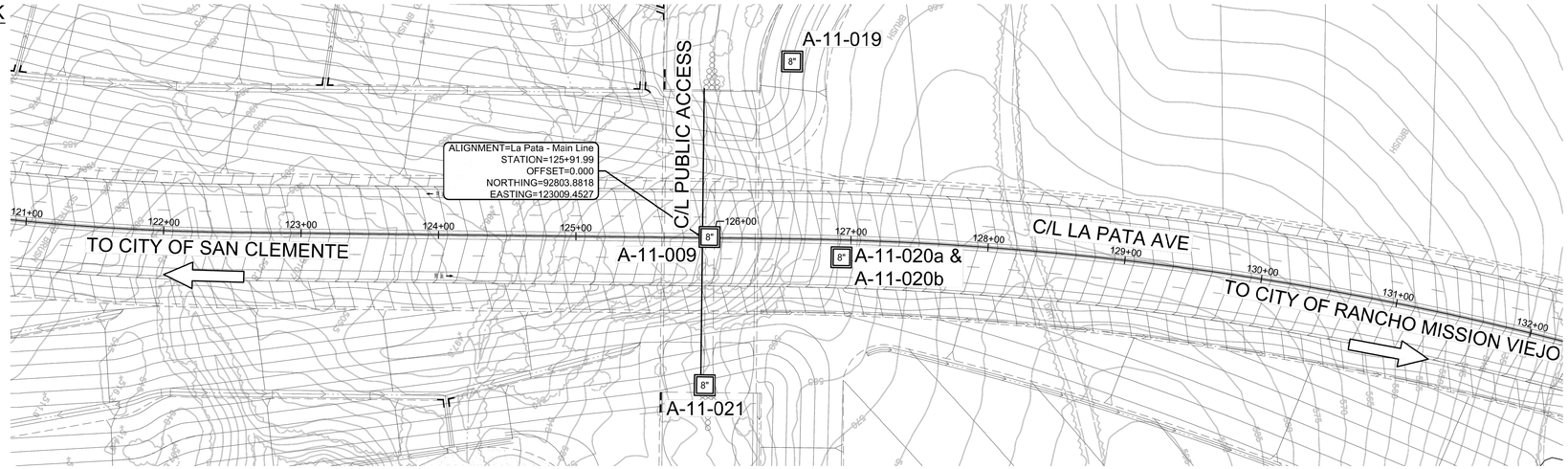

PLAN

1" = 50'

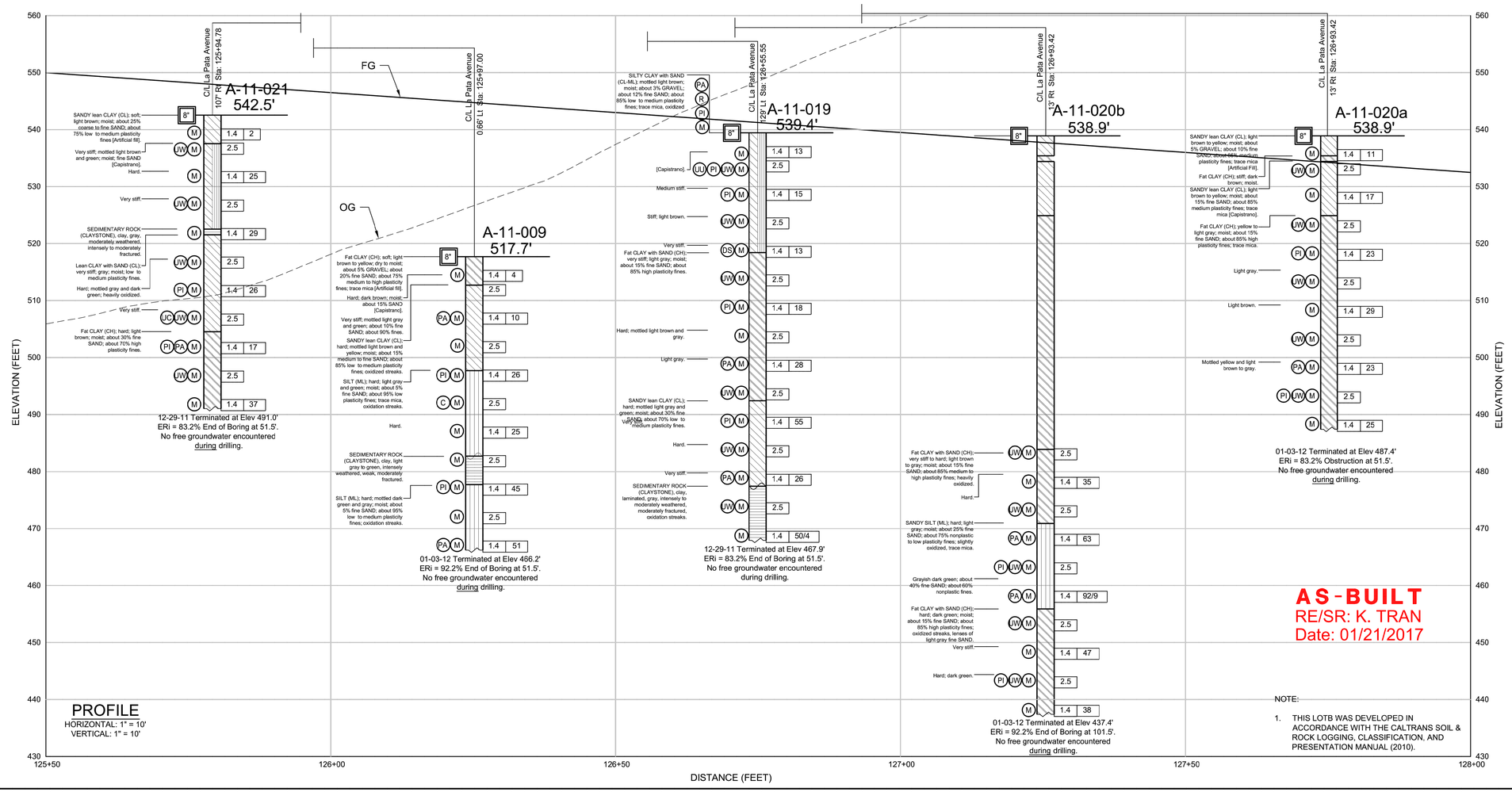

PROFILE

HORIZONTAL: 1" = 10'
VERTICAL: 1" = 10'

NOTE:

1. THIS LOTB WAS DEVELOPED IN ACCORDANCE WITH THE CALTRANS SOIL & ROCK LOGGING, CLASSIFICATION, AND PRESENTATION MANUAL (2010).

COUNTY OF ORANGE CALIFORNIA

MARK	DESCRIPTION	DATE	APPR.

PREPARED UNDER THE RESPONSIBLE CHARGE OF:

PROFESSIONAL GEOLOGIST — Saverio Siciliano No. 2409 — CERTIFIED ENGINEERING GEOLOGIST — Exp.6/30/15 — STATE OF CALIFORNIA

SAVERIO SICILIANO

JULY 12, 2013
DATE

FIELD INVESTIGATION BY: ALEXANDER STERN
DRAWN BY: SLB
CHECKED BY: SS
DRAWING CODE:
JOB NO. HG1315-2B
PLOT DATE: MARCH 29, 2013
SCALE: AS SHOWN

COUNTY OF ORANGE
OC PUBLIC WORKS

Geosyntec consultants
2100 MAIN STREET, SUITE 150
HUNTINGTON BEACH, CALIFORNIA 92648 USA
PHONE: 714.969.0800

LA PATA AVENUE GAP CLOSURE
BRIDGE NO. 3

LOG OF TEST BORING
No. 1: LONGITUDINAL

Sheet Reference Number

S3-6

N:\CACADD\OJ\ORANGE COUNTY\ORANGE COUNTY~HG1315 GROUND\FDR_B3\1315FDR3-II-2.dwg 7/12/13 12:10

CONSISTENCY CLASSIFICATION FOR SOILS

ACCORDING TO THE STANDARD PENETRATION TEST (ASTM D-1586)

SPT N-VALUE / BLOWS PER FOOT	GRANULAR	SPT N-VALUE / BLOWS PER FOOT	COHESIVE
0 - 4	VERY LOOSE	< 2	VERY SOFT
5 - 10	LOOSE	2 - 4	SOFT
11 - 30	MEDIUM DENSE	5 - 9	FIRM
31 - 50	DENSE	9 - 15	STIFF
> 50	VERY DENSE	16 - 30	VERY STIFF
		> 30	HARD

LEGEND OF EARTH MATERIALS (USCS) BASED ON ASTM D2487, D2488

- CLAY
- SILT
- SAND
- GRAVEL
- SILTY CLAY
- CLAYEY SILT
- PEAT
- SEDIMENTARY ROCK
- CLAYEY SAND
- METAMORPHIC ROCK
- SILTY SAND
- IGNEOUS ROCK
- ORGANIC SOIL

TYPES OF BORINGS

- 2 1/4" CONE PENETROMETER
- SAMPLE BORING (DRY)
- ROTARY SAMPLE BORING (WET)
- AUGER BORING (DRY)
- TEST PIT
- DIAMOND CORE BORING
- JET BORING
- DYNAMIC CONE PENETROMETER

IN-STU, LAB & FIELD TEST DESIGNATIONS

C	CONSOLIDATION (ASTM D 2435)
CL	COLLAPSE POTENTIAL (ASTM D5333)
CP	COMPACTION (ASTM D698 & D1557)
CR	CORROSIVITY TESTING (CTM 643, CTM 422, CTM 417)
DS	CONSOLIDATED UNDRAINED TRIAXIAL (ASTM D 4767)
DU	DIRECT SHEAR (ASTM D3080)
EI	EXPANSION INDEX (ASTM D 4829)
M	MOISTURE CONTENT (ASTM D 2216)
PA	PARTICLE SIZE ANALYSIS (ASTM D 422)
PI	PLASTICITY INDEX (AASHTO T 90) LIQUID LIMIT (AASHTO T 89)
R	R-VALUE (CTM 301)
SE	SAND EQUIVALENT (CTM 217)
SG	SPECIFIC GRAVITY (AASHTO T 100)
SL	SHRINKAGE LIMIT (ASTM D 427)
SW	SWELL POTENTIAL (ASTM D 427)
UC	UNCONFINED COMPRESSIVE STRENGTH (ASTM D 2166)
UU	UNCONSOLIDATED UNDRAINED TRIAXIAL (ASTM D 2850)
WA	WASH ANALYSIS (ASTM D 1140)

NOTE: VISUAL CLASSIFICATIONS OF EARTH MATERIALS ARE BASED ON FIELD INSPECTION AND ARE CONFIRMED OR REVISED WITH LABORATORY TEST RESULTS AS NECESSARY.

ROTARY BORING

Hole I.D. | Location | Top Hole El. | Description of material (Using Unified Soil Classification) | Field & Lab Tests | Water measured | Estimated material change | Soil/Rock boundary | Blows per 12 in.—30 (Using 28 lb hammer with 3 in. drop or as noted) | Pulled Pipe | Casing driven (Size of Sampler—(Inches)) | SPT N-Value (Blows per foot of ASTM 1586-99) | Boring Date | Terminated at Elev | Hammer efficiency (%) | Pr

HAND BORING

Hole I.D. | Location | Top Hole El. | Blows per 12 in.—30 (Using 28 lb hammer with 3 in. drop or as noted) | Pulled Pipe | Refusal | Ground water | Date Measured | Elev. | Description of material | Sample | Sample taken | Boring Date | Terminated at Elev

DYNAMIC CONE PENETRATION BORING

Hole I.D. | Location | Top Hole El. | Driving note in parentheses per 12 in. (using a Stanley Hammer weighing 22 lb. cone, or as noted) | Pushed | No count recorded | Elev. | Date Measured | Boring Date | Terminated at Elev

CONE PENETRATION TEST (CPT) BORING

Hole I.D. | Location | Top Hole El. | Pressure measured during driving (Friction element (34.88 in. area) divided by pressure measured on tip element) | Friction Ratio (%) | Tip Bearing (MPa) | Pressure measured on tip element (2.33 in. area) | Boring Date | Terminated at Elev

BENCHMARK

GPS USED FOR ELEVATION NVGD 29

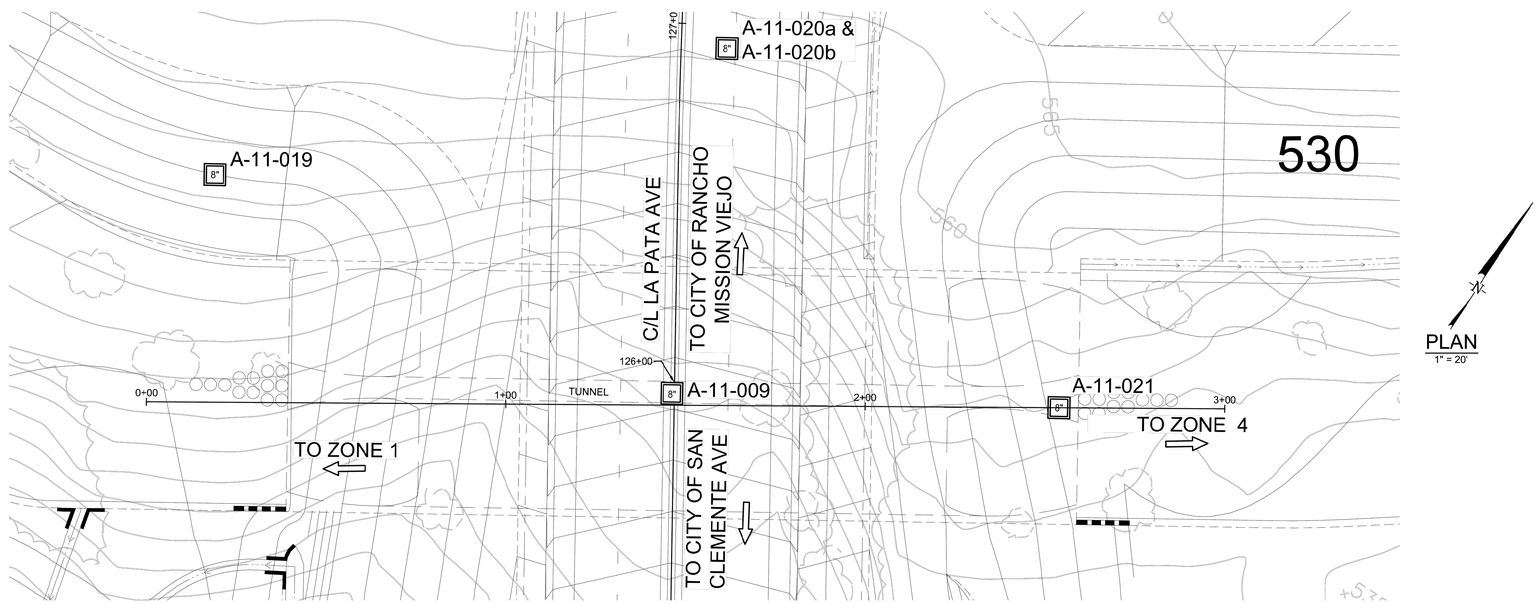

PLAN

1" = 20'

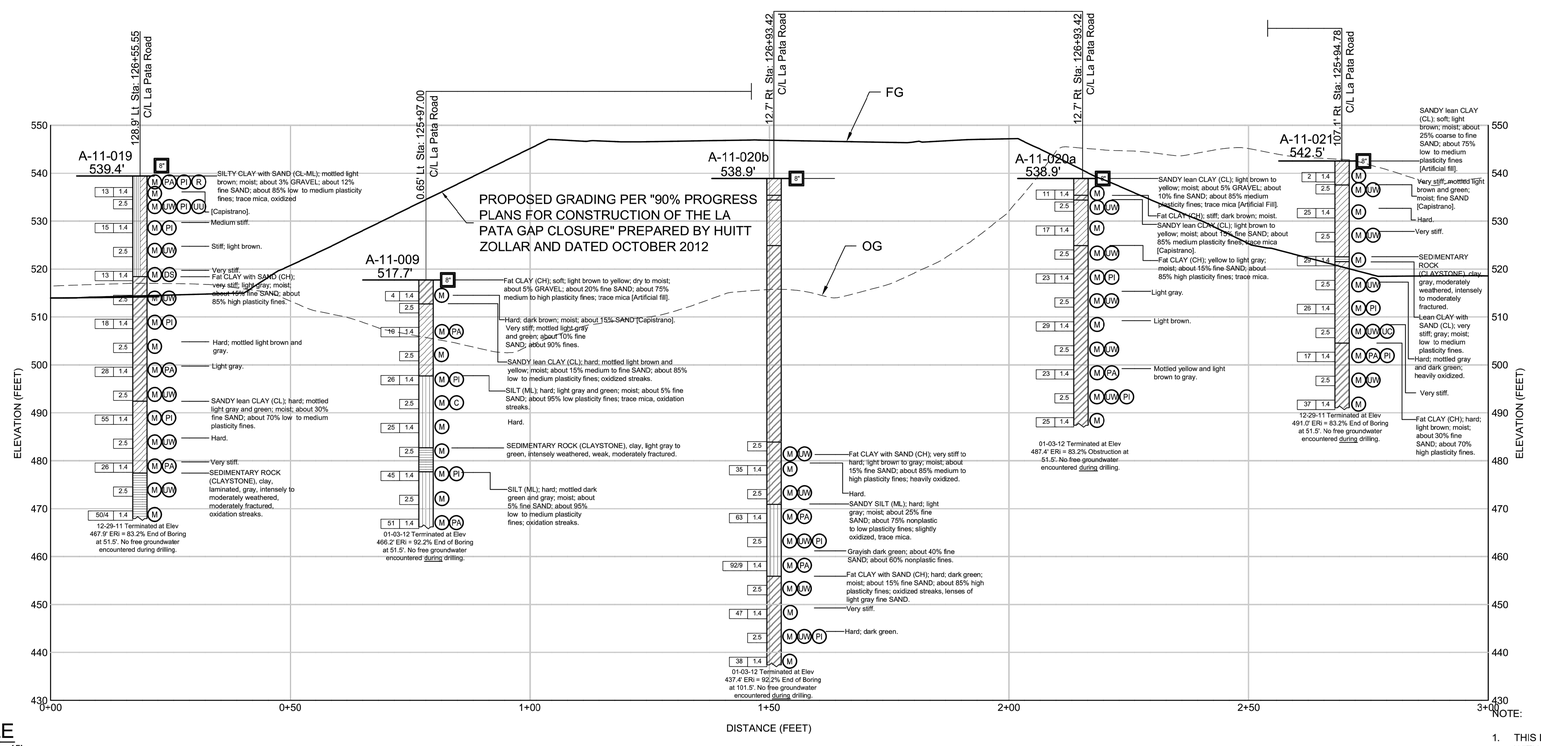

PROFILE

HORIZONTAL: 1" = 15'
VERTICAL: 1" = 15'

NOTE:

1. THIS LOTB WAS DEVELOPED IN ACCORDANCE WITH THE CALTRANS SOIL & ROCK LOGGING, CLASSIFICATION, AND PRESENTATION MANUAL (2010).

AS-BUILT
RE/SR: K. TRAN
Date: 01/21/2017

COUNTY OF ORANGE CALIFORNIA

MARK	DESCRIPTION	DATE	APPR.

PREPARED UNDER THE RESPONSIBLE CHARGE OF:

FIGHT SESSIONAL GEOLOGIST — Saverio Siciliano No. 2409 CERTIFIED ENGINEERING GEOLOGIST Exp.6/30/15 — STATE OF CALIFORNIA

SAVERIO SICILIANO

JULY 12, 2013
DATE

FIELD INVESTIGATION BY:
ALEXAMDER STERN

DRAWN BY:	CHECKED BY:
SLB	SS

DRAWING CODE:

JOB NO. HG1315-2B
PLOT DATE: MARCH 29, 2013
SCALE: AS SHOWN

COUNTY OF ORANGE
OC PUBLIC WORKS

Geosyntec consultants
2100 MAIN STREET, SUITE 150
HUNTINGTON BEACH, CALIFORNIA 92648 USA
PHONE: 714.969.0800

LA PATA AVENUE GAP CLOSURE
BRIDGE NO. 3

LOG OF TEST BORING No. 2: TRANSVERSE

Sheet Reference Number

S3-7

CONTECH®
ENGINEERED SOLUTIONS LLC

BRIDGECOR PLATE

SAN CLEMENTE, CA

447263-INDEX	
PAGE NUMBER	PAGE TITLE
	COVER SHEET
1	PROFILES/SHAPES
2-4	PLATE LAYOUTS
5-9	DETAILS

CNS ENGINEERS, INC.

☒ Approved ☐ Approved as Corrected
☐ Rejected ☐ Revise and Resubmit
☐ Submit Specified Item

This review is only for general conformance with the design concept of the project and general compliance with the information given in the Contract Documents. Corrections or comments made on the shop drawings during this review do not relieve contractor from compliance with the requirements of the plans and specifications. Approval of a specific item shall not include approval of an assembly of which the item is a component. Contractor is responsible for: dimensions to be confirmed and correlated at the jobsite; information that pertains solely to the fabrication processes or to the means, methods, techniques, sequences and procedures of construction; coordination of the Work of all trades; and for performing all work in a safe and satisfactory manner.

Date 3/23/2015 By

(10 sheets)

THE UNDERSIGNED HEREBY APPROVES THE ATTACHED (9) PAGES.

CUSTOMER DATE

GALVANIZED STEEL STRUCTURAL PLATE SPECIFICATIONS

SCOPE

THIS SPECIFICATION COVERS THE MANUFACTURE AND INSTALLATION OF THE GALVANIZED STEEL STRUCTURAL PLATE STRUCTURE DETAILED IN THE PLANS.

MATERIALS

THE GALVANIZED STEEL STRUCTURAL PLATE STRUCTURE SHALL CONSIST OF PLATES AND APPURTENANT ITEMS AS SHOWN ON THE PLANS AND SHALL CONFORM TO THE REQUIREMENTS OF AASHTO M 167/ASTM A 761. ALL MANUFACTURING PROCESSES INCLUDING CORRUGATING, PUNCHING, CURVING AND GALVANIZING SHALL BE PERFORMED WITHIN THE UNITED STATES USING RAW MATERIALS MADE IN THE UNITED STATES. ASSEMBLY BOLTS AND NUTS SHALL BE GALVANIZED AND MEET THE PROVISIONS OF ASTM A 449, TYPE 1,AND ASTM A-563, GRADE C, RESPECTIVELY.

ASSEMBLY

THE STRUCTURE SHALL BE ASSEMBLED IN ACCORDANCE WITH THE SHOP DRAWINGS PROVIDED BY THE MANUFACTURER AND PER THE MANUFACTURER'S RECOMMENDATIONS. BOLTS SHALL BE TIGHTENED USING AN APPLIED TORQUE OF BETWEEN 100 AND 300 FT.-LBS.

INSTALLATION

THE STRUCTURE SHALL BE INSTALLED IN ACCORDANCE WITH THE PLANS AND SPECIFICATIONS, THE MANUFACTURER'S RECOMMENDATIONS, AND THE AASHTO STANDARD SPECIFICATIONS FOR HIGHWAY BRIDGES, SECTION 26 (DIVISION II).

BACKFILL

THE STRUCTURE SHALL BE BACKFILLED USING CLEAN WELL GRADED GRANULAR MATERIAL THAT MEETS THE REQUIREMENTS OF AASHTO M 145 FOR SOIL CLASSIFICATION A-1, A-2-4, A-2-5 AND A-3. BACKFILL MUST BE PLACED SYMMETRICALLY ON EACH SIDE OF THE STRUCTURE IN 6 TO 8 INCH LIFTS. EACH LIFT SHALL BE COMPACTED TO A MINIMUM OF 90 PERCENT DENSITY PER AASHTO T-180.

NOTE

CONSTRUCTION LOADS THAT EXCEED HIGHWAY LOAD LIMITS ARE NOT ALLOWED ON THE STRUCTURE WITHOUT APPROVAL FROM THE ENGINEER.

AS-BUILT

REGISTERED PROFESSIONAL ENGINEER DENNIS L. SCHANEIDER CIVIL STATE OF CALIFORNIA 12/31/12 3/16/15

AS-BUILT
RE/SR: K. TRAN
Date: 01/21/2017

PRE-447263-001-BCORR-PRE-F-PROFILE END PLAN LINE WORK DWG

CONTECH PROJECT ID # 447263

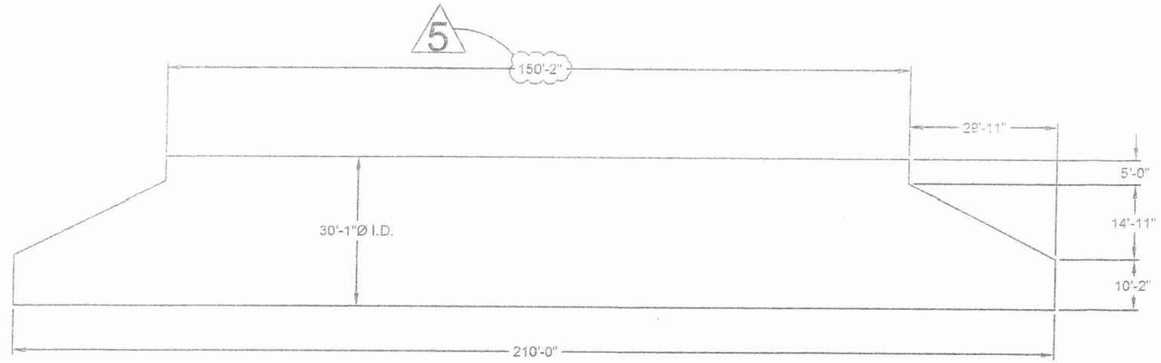

PROFILE #1 (QTY. OF 1)

SCALE: 1" = 30'-0"

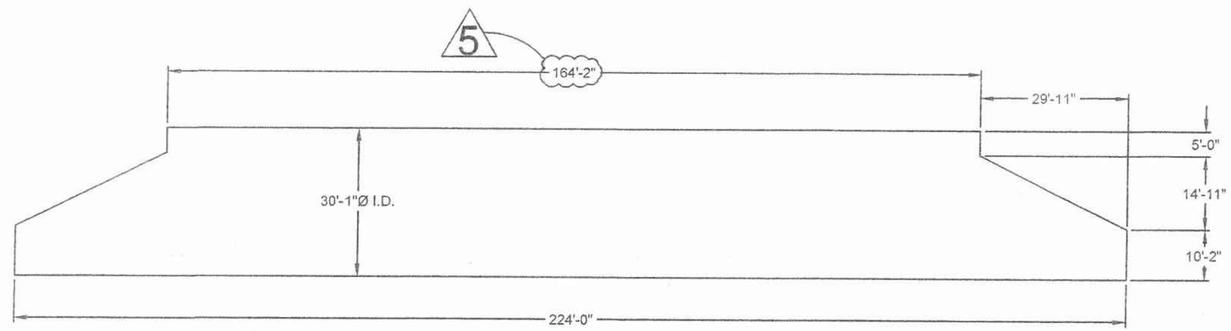

PROFILE #2 (QTY. OF 2)

SCALE: 1" = 30'-0"

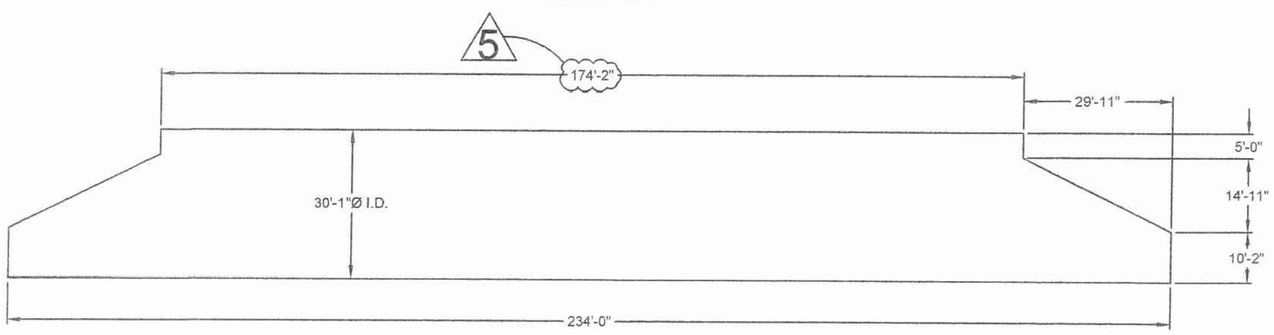

PROFILE #3 (QTY. OF 2)

SCALE: 1" = 30'-0"

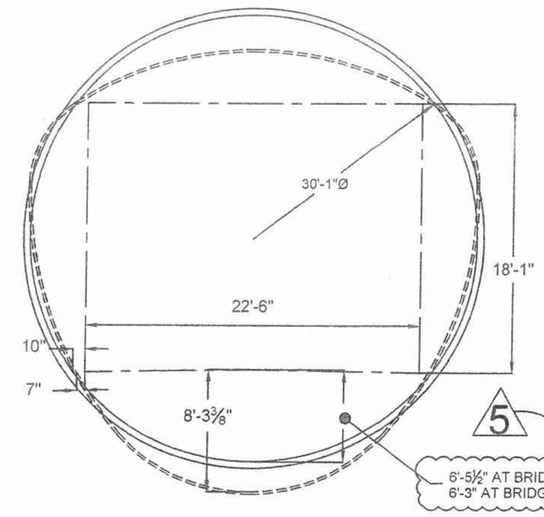

APPROX AREA = 711.6 SQ. FT.
PLATE MAKE UP: 8 @ 9 S
TOTAL= 72 S

5 ACTUAL ELEVATIONS TO BE VERIFIED AND STAKED BY ORANGE COUNTY SURVEY PRIOR TO INSTALLATIONS.

NOTES:

1) MEASUREMENTS ARE TO THE INSIDE CRESTS OF THE CORRUGATIONS.
2) DIMENSIONS ARE SUBJECT TO MANUFACTURING TOLERANCES.
3) CIRCUMFERENTIAL PLATE LENGTHS ARE IN TERMS OF S = 16 INCHES.

30'-1"Ø BRIDGECOR ROUND PIPE

SCALE: 1" = 10'-0"

REGISTERED PROFESSIONAL ENGINEER
DAVIS L. SCHNEIDER
67393
12/31/16
CIVIL
STATE OF CALIFORNIA
3/11/15

AS-BUILT

AS-BUILT
RE/SR: K. TRAN
Date: 01/21/2017

BridgeCor

PRE-447263-001-BCORR-PRE-F-PROFILE END PLAN LINE WORK DWG

MARK	DATE	REVISION DESCRIPTION	BY
5	2/24/2015	REVISIONS PER EOR COMMENTS	SCC
4	1/29/2015	ADD. BACKFILL ZONE DETAIL.	SCC
3	1/7/2015	REVISED PLATE LAYOUT AND NOTATIONS	SCC
2	12/9/2014	REVISED NOTES	SCC
1	12/8/2014	REVISED PROFILES/ELEVATIONS	SCC

CONTECH ENGINEERED SOLUTIONS LLC
www.ContechES.com
9025 Centre Pointe Dr., Suite 400, West Chester, OH 45069
800-338-1122 513-645-7000 513-645-7993 FAX

CONTECH STRUCTURAL PLATE

LA PATA AVENUE GAP

SAN CLEMENTE, CA

PROJECT No.: 447263	SEQ. No.: 001	DATE: 11/6/2014
DESIGNED: XXX		DRAWN: SCC
CHECKED: SRT		APPROVED: XXX
SHEET NO.: 1 OF 9		

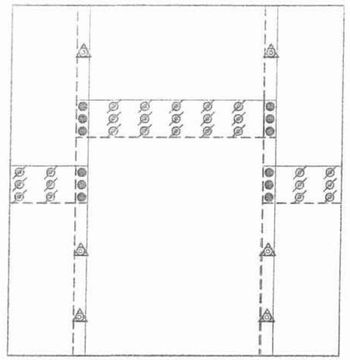

DETAIL "A"
SCALE: N.T.S.

LEGEND: (TYPICAL FOR ALL LOCATIONS)

⌀ = LONGITUDINAL-INTERNAL 1 3/4" LONG BOLT

● = 3-PLATE LAP JOINT 3" LONG

△ = CIRCUMFERENTIAL 2" LONG

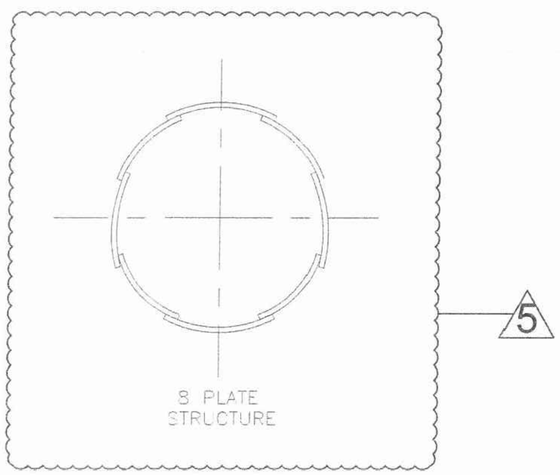

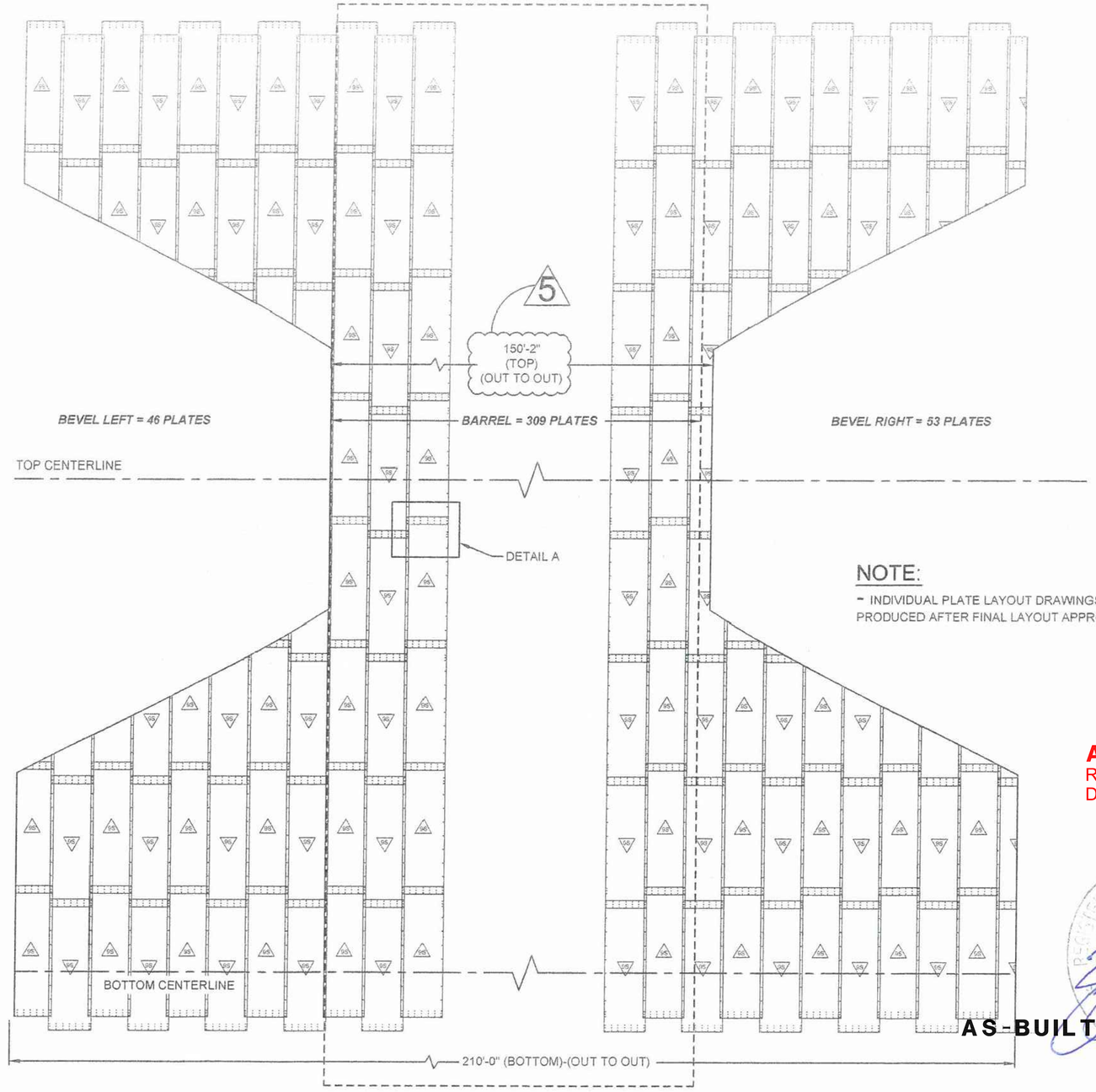

NOTE:
- INDIVIDUAL PLATE LAYOUT DRAWINGS TO BE PRODUCED AFTER FINAL LAYOUT APPROVAL.

AS-BUILT
RE/SR: K. TRAN
Date: 01/21/2017

REGISTERED PROFESSIONAL ENGINEER
LOUIS L. SCHNEIDER
64393
12/11/16
CIVIL
STATE OF CALIFORNIA
3/11/15

AS-BUILT

BridgeCor

(PROFILE #1) BRIDGECOR 30'-1"Ø ROUND PLATE LAYOUT (INSIDE VIEW)
SCALE: N.T.S. PRE-447263-001-BCORR-PRE-F-PROFILE END PLAN LINE WORK DWG

MARK	DATE	REVISION DESCRIPTION	BY
5	2/24/2015	REVISIONS PER EOR COMMENTS	SCC
4	1/29/2015	ADD. BACKFILL ZONE DETAIL.	SCC
3	1/7/2015	REVISED PLATE LAYOUT AND NOTATIONS	SCC
2	12/9/2014	REVISED NOTES	SCC
1	12/8/2014	REVISED PROFILES/ELEVATIONS	SCC

CONTECH ENGINEERED SOLUTIONS LLC
www.ContechES.com
9025 Centre Pointe Dr., Suite 400, West Chester, OH 45069
800-338-1122 513-645-7000 513-645-7993 FAX

CONTECH STRUCTURAL PLATE

LA PATA AVENUE GAP

SAN CLEMENTE, CA

PROJECT No.: 447263	SEQ. No.: 001	DATE: 11/6/2014
DESIGNED: XXX		DRAWN: SCC
CHECKED: SRT		APPROVED: XXX
SHEET NO.: 2 OF 9		

I:\MERLIN\PROJECTS\ACTIVE\447200\447263\447263-1-5\PERSPATH\DRAWINGS\PROPOSAL\PRE-447263-001-BCORR-PRE-F-PROFILE END PLAN LINE WORK DWG.DWG 2/24/2015 10:14 AM

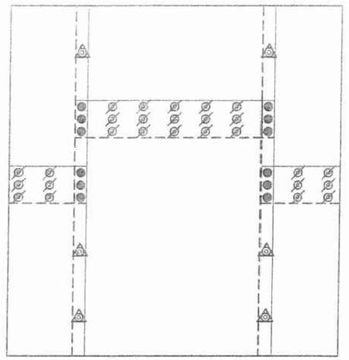

DETAIL "A"
SCALE: N.T.S.

LEGEND: (TYPICAL FOR ALL LOCATIONS)

⌀ = LONGITUDINAL-INTERNAL 1 3/4" LONG BOLT

● = 3-PLATE LAP JOINT 3" LONG

△ = CIRCUMFERENTIAL 2" LONG

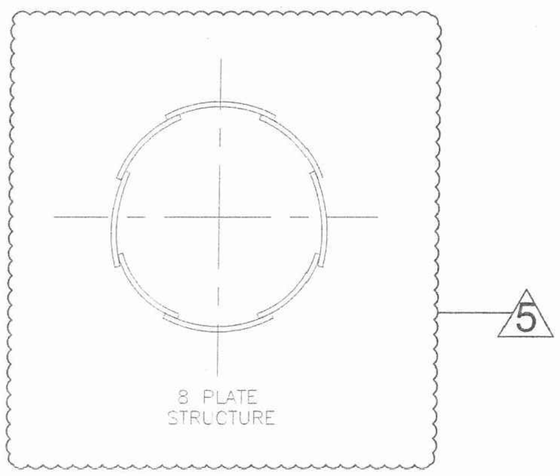

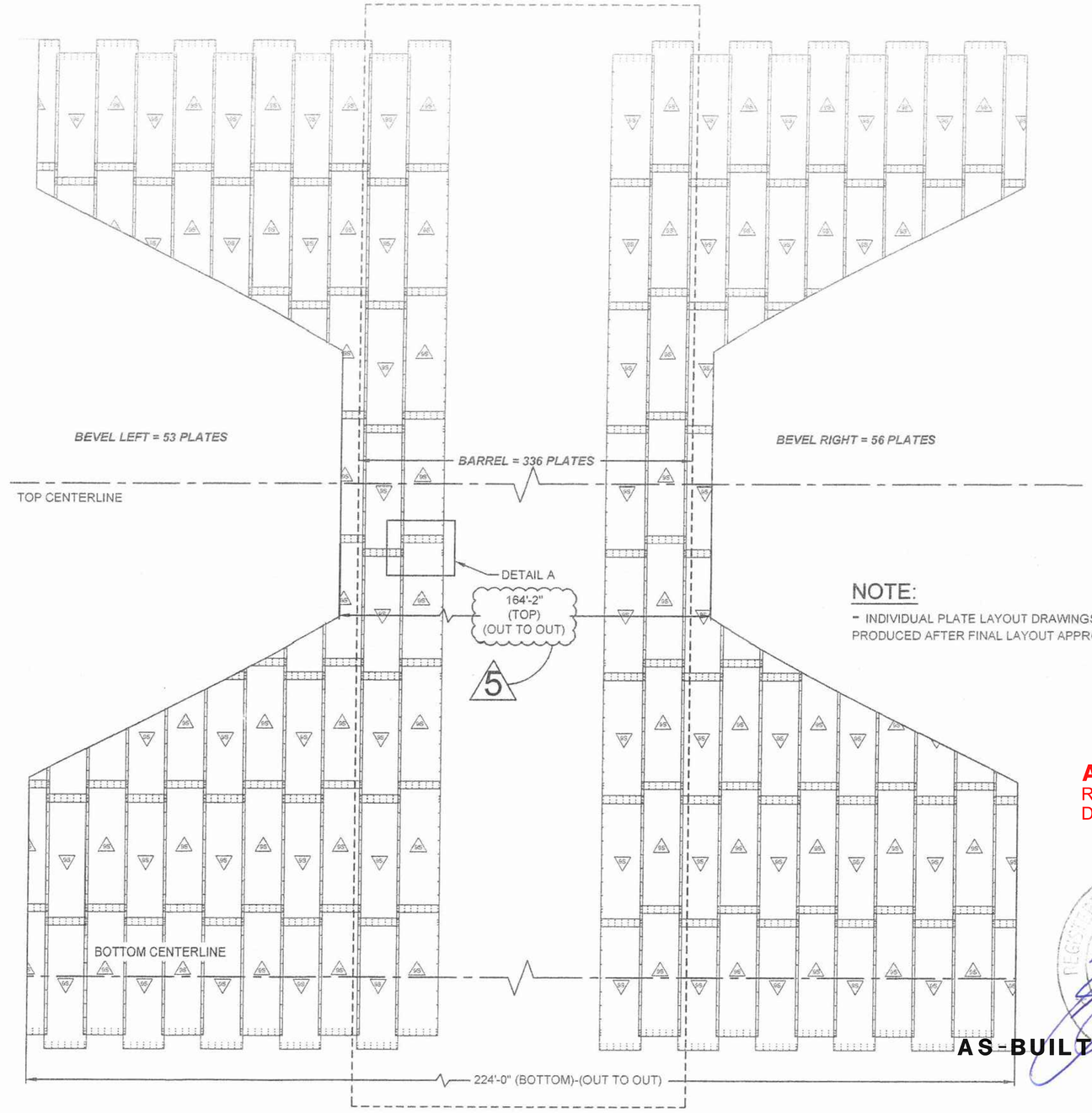

NOTE:

- INDIVIDUAL PLATE LAYOUT DRAWINGS TO BE PRODUCED AFTER FINAL LAYOUT APPROVAL.

AS-BUILT
RE/SR: K. TRAN
Date: 01/21/2017

AS-BUILT

REGISTERED PROFESSIONAL ENGINEER
DENNIS L. SCHNEIDER
67393
12/31/17
CIVIL
STATE OF CALIFORNIA
3/11/15

BridgeCor

(PROFILE #2) BRIDGECOR 30'-1"Ø ROUND PLATE LAYOUT (INSIDE VIEW) SCALE: N.T.S. PRE-447263-001-BCORR-PRE-F-PROFILE END PLAN LINE WORK DWG

MARK	DATE	REVISION DESCRIPTION	BY
5	2/24/2015	REVISIONS PER EOR COMMENTS	SCC
4	1/29/2015	ADD. BACKFILL ZONE DETAIL.	SCC
3	1/7/2015	REVISED PLATE LAYOUT AND NOTATIONS	SCC
2	12/9/2014	REVISED NOTES	SCC
1	12/8/2014	REVISED PROFILES/ELEVATIONS	SCC

CONTECH ENGINEERED SOLUTIONS LLC
www.ContechES.com
9025 Centre Pointe Dr., Suite 400, West Chester, OH 45069
800-338-1122 513-645-7000 513-645-7993 FAX

CONTECH STRUCTURAL PLATE

LA PATA AVENUE GAP

SAN CLEMENTE, CA

PROJECT No.: 447263	SEQ. No.: 001	DATE: 11/6/2014
DESIGNED: XXX	DRAWN: SCC	
CHECKED: SRT	APPROVED: XXX	
SHEET NO.: 3 OF 9		

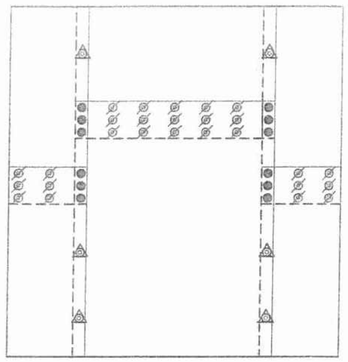

DETAIL "A"
SCALE: N.T.S.

LEGEND: (TYPICAL FOR ALL LOCATIONS)

⌀ = LONGITUDINAL-INTERNAL 1 3/4" LONG BOLT

● = 3-PLATE LAP JOINT 3" LONG

△ = CIRCUMFERENTIAL 2" LONG

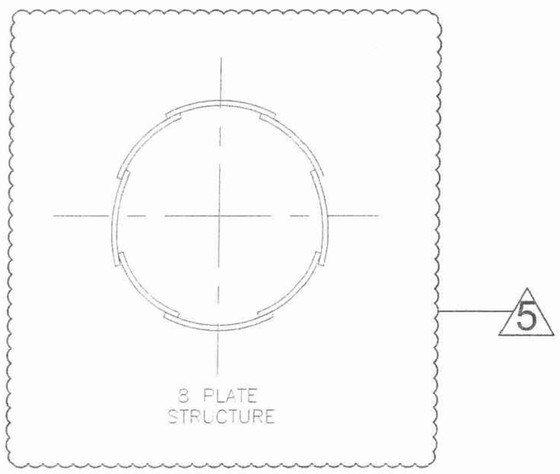

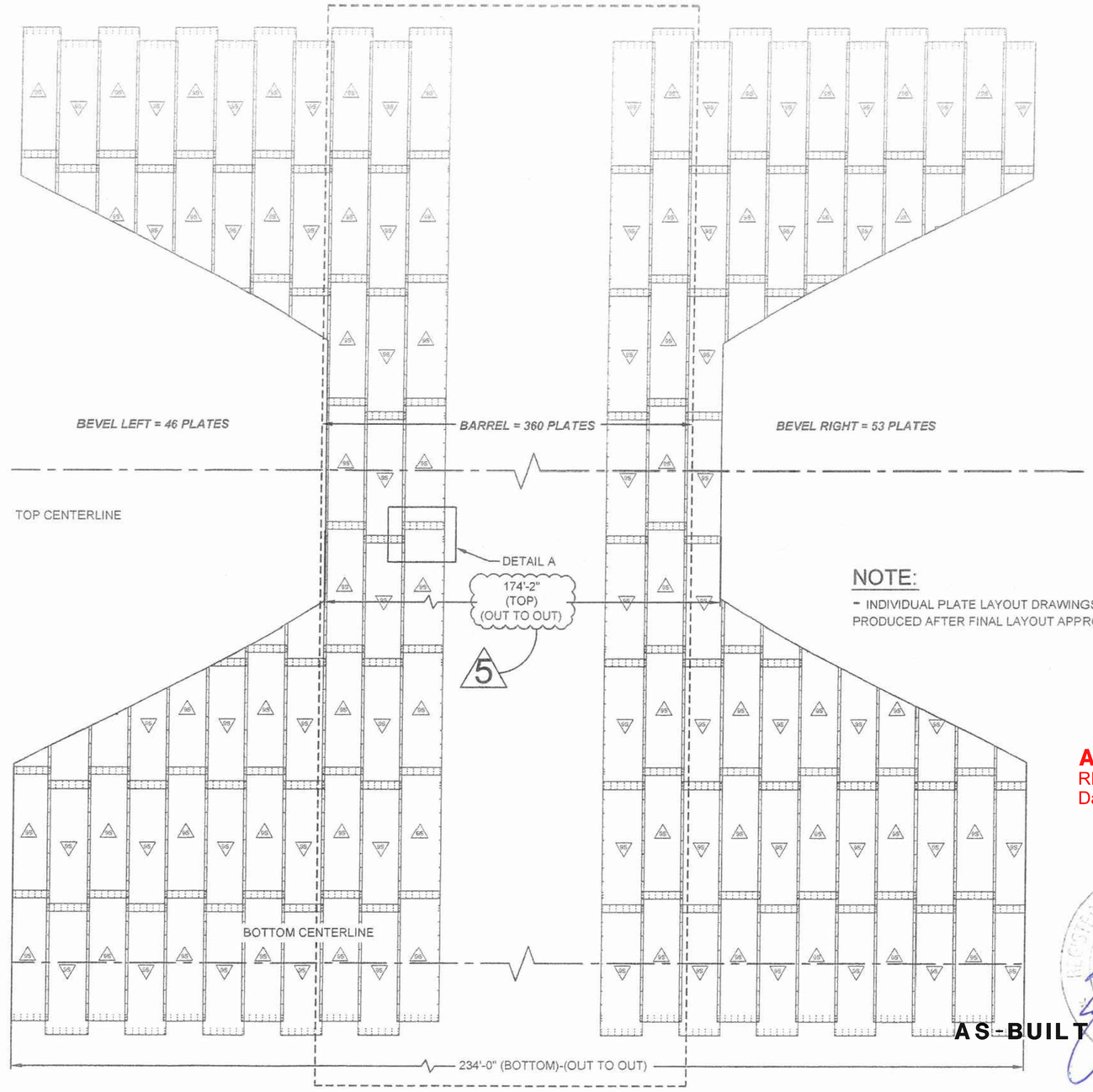

NOTE:
- INDIVIDUAL PLATE LAYOUT DRAWINGS TO BE PRODUCED AFTER FINAL LAYOUT APPROVAL.

AS-BUILT
RE/SR: K. TRAN
Date: 01/21/2017

LICENSED PROFESSIONAL ENGINEER
DAVID L. SCHNEIDER
67393
12/31/14
CIVIL
STATE OF CALIFORNIA
3/11/15

AS-BUILT

BridgeCor

(PROFILE #3) BRIDGECOR 30'-1"Ø ROUND PLATE LAYOUT (INSIDE VIEW)

SCALE: N.T.S. PRE-447263-001-BCORR-PRE-F-PROFILE END PLAN LINE WORK DWG

MARK	DATE	REVISION DESCRIPTION	BY
5	2/24/2015	REVISIONS PER EOR COMMENTS	SCC
4	1/29/2015	ADD. BACKFILL ZONE DETAIL.	SCC
3	1/7/2015	REVISED PLATE LAYOUT AND NOTATIONS	SCC
2	12/9/2014	REVISED NOTES	SCC
1	12/8/2014	REVISED PROFILES/ELEVATIONS	SCC

CONTECH ENGINEERED SOLUTIONS LLC
www.ContechES.com
9025 Centre Pointe Dr., Suite 400, West Chester, OH 45069
800-338-1122 513-645-7000 513-645-7993 FAX

CONTECH STRUCTURAL PLATE

LA PATA AVENUE GAP

SAN CLEMENTE, CA

PROJECT No.: 447263	SEQ. No.: 001	DATE: 11/6/2014
DESIGNED: XXX		DRAWN: SCC
CHECKED: SRT		APPROVED: XXX
SHEET NO.: 4 OF 9		

I:\MERLIN\PROJECTS\ACTIVE\447263\447263-1-SUPERS\ANDRAWINGS\PROPOSAL\PRE-447263-001-BCORR-PRE-F-PROFILE END PLAN LINE WORK DWG.DWG 2/24/2015 10:15 AM

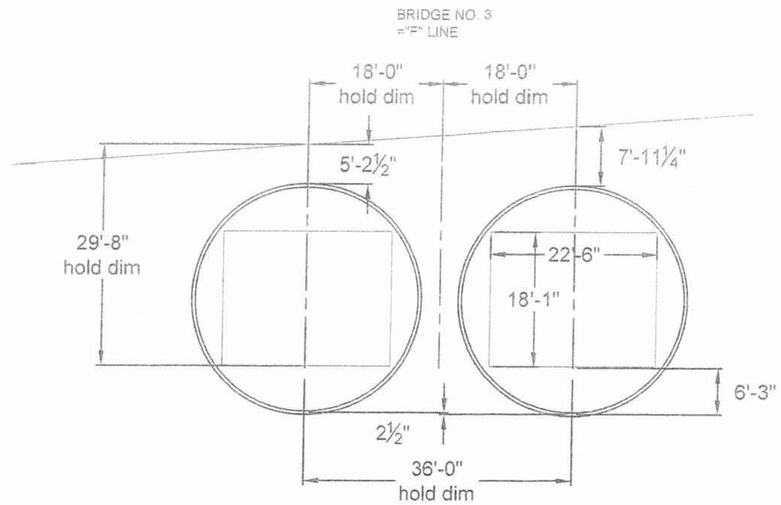

NOTES:

1) FOR DETAILS NOT SHOWN, SEE CONTRACT PLAN SHEET 255.
2) ADJUST CONCRETE HEADWALL, COLLAR, WINGWALLS, CURBS, ROADWAY FILL, PERFORATED PIPE DRAIN AND OTHER ELEMENTS NOT SHOWN TO FIT THE DCSP STRUCTURE.
3) FOR DETAILS OF CONCRETE COLLAR AND HEADWALL, SEE SHEET 257.
4) CONSTRUCTION SEQUENCING TO BE COVERED IN PRECONSTRUCTION MEETINGS.
5) ROADWAY ELEVATIONS FOR THE SOUTHERLY OPERATIONS EQUIPMENT ACCESS ROAD ARE FROM PLAN SHEET ST-34.

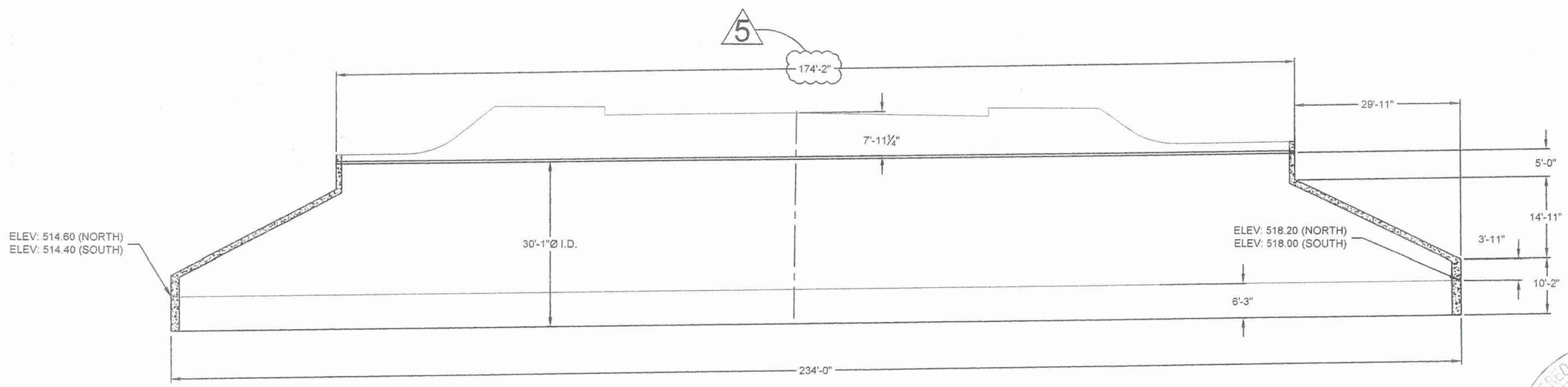

AS-BUILT
RE/SR: K. TRAN
Date: 01/21/2017

PROFILE STA 126+15.34 (XS-37)
SCALE: 1" = 20'-0"

AS-BUILT

REGISTERED PROFESSIONAL ENGINEER
DAVIS L. SCHANE
67703
12/31/16
CIVIL
STATE OF CALIFORNIA
3/11/15

BridgeCor

PRE-447263-001-BCORR-PRE-F-PROFILE END PLAN LINE WORK DWG

MARK	DATE	REVISION DESCRIPTION	BY
5	2/24/2015	REVISIONS PER EOR COMMENTS	SCC
4	1/29/2015	ADD. BACKFILL ZONE DETAIL.	SCC
3	1/7/2015	REVISED PLATE LAYOUT AND NOTATIONS	SCC
2	12/9/2014	REVISED NOTES	SCC
1	12/8/2014	REVISED PROFILES/ELEVATIONS	SCC

CONTECH ENGINEERED SOLUTIONS LLC
www.ContechES.com
9025 Centre Pointe Dr., Suite 400, West Chester, OH 45069
800-338-1122 513-645-7000 513-645-7993 FAX

CONTECH STRUCTURAL PLATE

LA PATA AVENUE GAP

SAN CLEMENTE, CA

PROJECT No.: 447263	SEQ. No. 001	DATE: 11/6/2014
DESIGNED: XXX	DRAWN: SCC	
CHECKED: SRT	APPROVED: XXX	
SHEET NO.: 5 OF 9		

I:\MERLIN\PROJECT\ACTIVE\447263\447263-1-SUPERSPAN\DRAWINGS\PROPOSAL\PRE-447263-001-BCORR-PRE-F-PROFILE END PLAN LINE WORK DWG.DWG 2/24/2015 10:15 AM

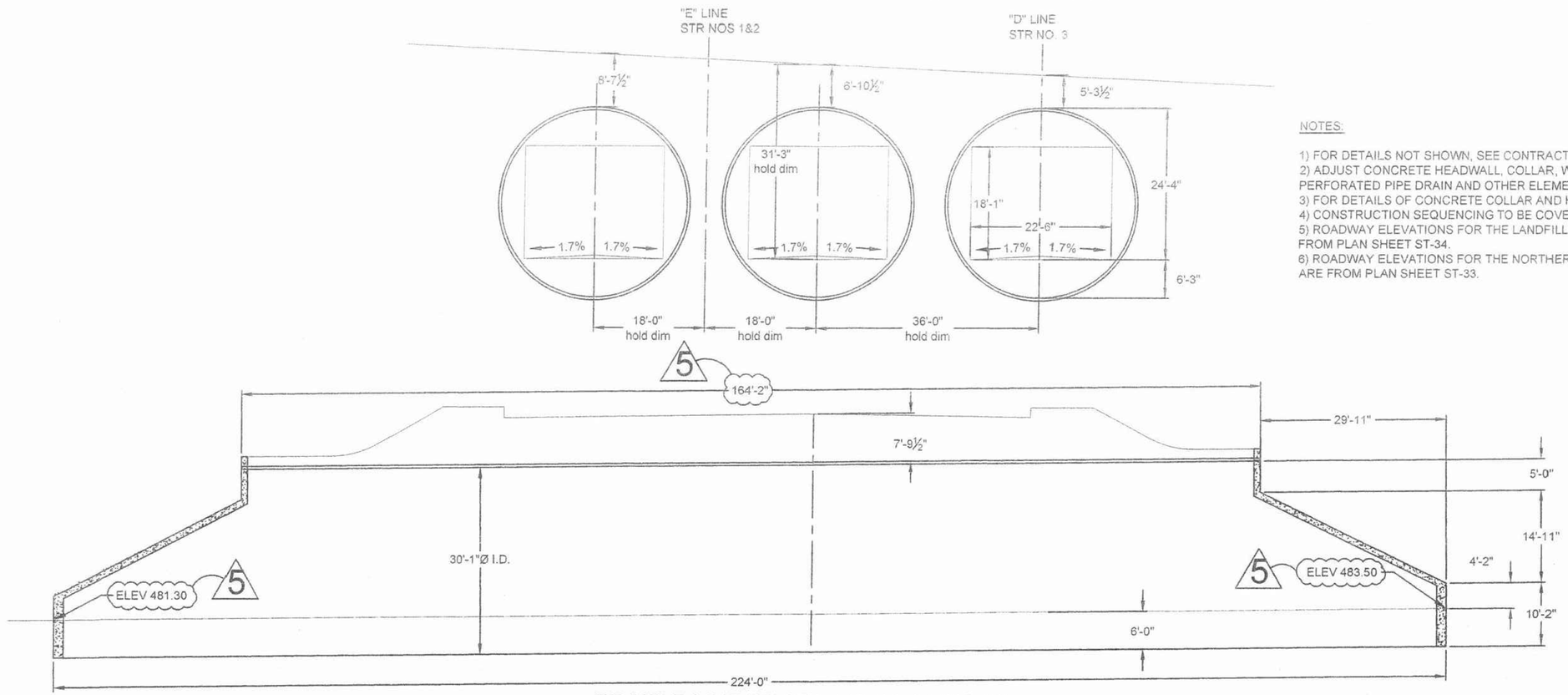

PROFILE LINE "E" STA 147+93.07 (XS-48)

SCALE: 1" = 20'-0"

NOTES:

1) FOR DETAILS NOT SHOWN, SEE CONTRACT PLAN SHEET 248 .
2) ADJUST CONCRETE HEADWALL, COLLAR, WINGWALLS, CURBS, ROADWAY FILL, PERFORATED PIPE DRAIN AND OTHER ELEMENTS NOT SHOWN TO FIT THE DCSP STRUCTURE.
3) FOR DETAILS OF CONCRETE COLLAR AND HEADWALL, SEE SHEET 250.
4) CONSTRUCTION SEQUENCING TO BE COVERED IN PRECONSTRUCTION MEETINGS.
5) ROADWAY ELEVATIONS FOR THE LANDFILL AND REFUSE TRUCK ACCESS ROAD ARE FROM PLAN SHEET ST-34.
6) ROADWAY ELEVATIONS FOR THE NORTHERLY OPERATIONS EQUIPMENT ACCESS ROAD ARE FROM PLAN SHEET ST-33.

5 ACTUAL ELEVATIONS TO BE VERIFIED AND STAKED BY ORANGE COUNTY SURVEY PRIOR TO INSTALLATIONS.

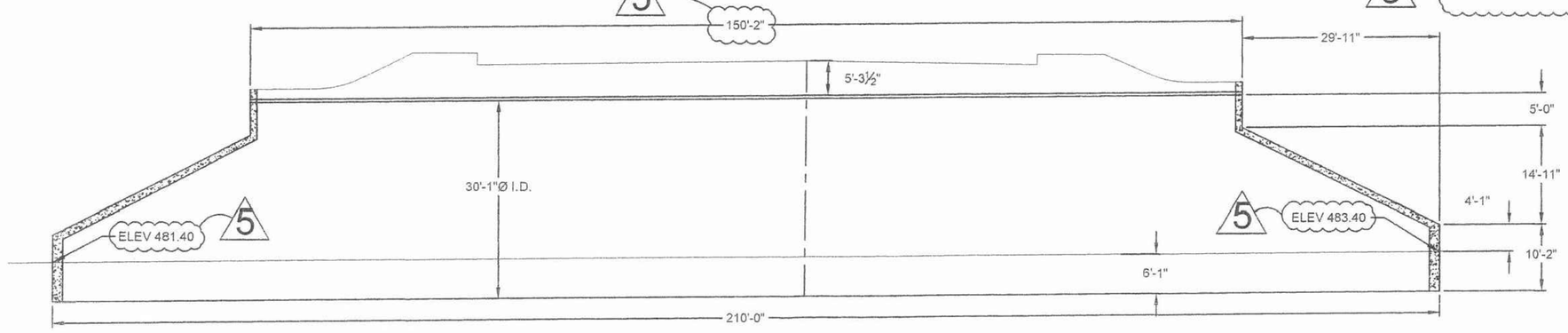

5 PROFILE LINE "D" STA 147+39.07 (XS-48)

SCALE: 1" = 20'-0"

AS-BUILT
RE/SR: K. TRAN
Date: 01/21/2017

REGISTERED PROFESSIONAL ENGINEER TRAVIS L. SCHNEIDER 67693 CIVIL STATE OF CALIFORNIA 12/30/16 3/11/15

BridgeCor

PRE-447263-001-BCORR-PRE-F-PROFILE END PLAN LINE WORK DWG

MARK	DATE	REVISION DESCRIPTION	BY
5	2/24/2015	REVISIONS PER EOR COMMENTS	SCC
4	1/29/2015	ADD. BACKFILL ZONE DETAIL.	SCC
3	1/7/2015	REVISED PLATE LAYOUT AND NOTATIONS	SCC
2	12/9/2014	REVISED NOTES	SCC
1	12/8/2014	REVISED PROFILES/ELEVATIONS	SCC

CONTECH ENGINEERED SOLUTIONS LLC
www.ContechES.com
9025 Centre Pointe Dr., Suite 400, West Chester, OH 45069
800-338-1122 513-645-7000 513-645-7993 FAX

CONTECH STRUCTURAL PLATE

LA PATA AVENUE GAP

SAN CLEMENTE, CA

PROJECT No.: 447263	SEQ. No.: 001	DATE: 11/6/2014
DESIGNED: XXX		DRAWN: SCC
CHECKED: SRT		APPROVED: XXX
SHEET NO.: 6 OF 9		

I:\WERLIN\PROJECT\ACTIVE\447260\447263\447263-1-SUPERSPAN\DRAWINGS\PROPOSAL\PRE-447263-001-BCORR-PRE-F-PROFILE END PLAN LINE WORK DWG.DWG 2/24/2015 10:15 AM

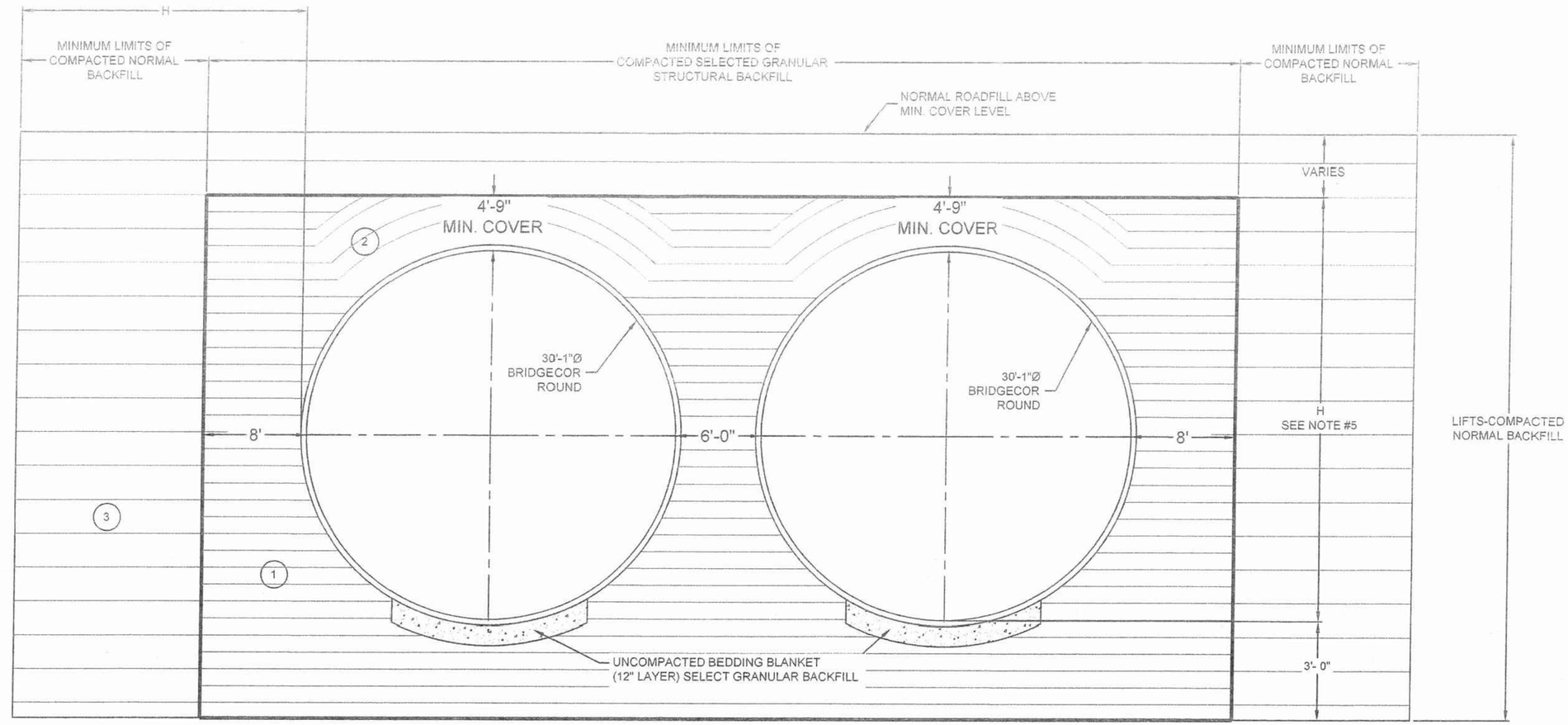

SECTION

1 SELECT GRANULAR STRUCTURAL BACKFILL LIMITS.

2 INITIAL LIFTS OVER CROWN OF STRUCTURE AS INDICATED BY SHADED AREA TO BE COMPACTED TO REQUIRED DENSITY WITH HAND OPERATED EQUIPMENT OR WITH SMALL TRACTOR (D-4 OR SMALLER) DRAWN EQUIPMENT.

3 EMBANKMENT FILL

OUTLINES LIMITS OF STRUCTURAL BACKFILL

NOTES:

1. ALL SELECT GRANULAR BACKFILL TO BE PLACED IN A BALANCED FASHION IN THIN LIFTS (6"-8" LOOSE TYPICALLY) AND COMPACTED TO 90 PERCENT DENSITY PER AASHTO T-180.
2. CONTRACTOR IS RESPONSIBLE TO PROVIDE COMPLETE AND REGULAR MONITORING OF THE BRIDGECOR SHAPE DURING ALL BACKFILLING STEPS.
3. PREVENT EXCESSIVE DISTORTION OF SHAPE AS NECESSARY BY VARYING COMPACTION METHODS AND EQUIPMENT.
4. MINIMUM TRENCH WIDTH IS BASED ON AASHTO LRFD SECTION 12 SPECIFICATIONS.
5. H = STRUCTURE RISE + COVER.
6. SETTLEMENTS AT THE BRIDGE LOCATIONS SHALL BE MONITORED BY THE CONTRACTOR. PLACEMENT OF UNCOMPACTED BEDDING BLANKET SHALL NOT BEGIN UNTIL THE ENGINEER HAS MADE THE SETTLEMENT RELATED DETERMINATIONS DESCRIBED IN THE GEOTECHNICAL DESIGN REPORT.

BACKFILL ZONE DETAIL

SCALE: 1" = 10'-0"

ADDITIONAL BACKFILL NOTES:

SATISFACTORY BACKFILL MATERIAL, PROPER PLACEMENT, AND COMPACTION ARE KEY FACTORS IN OBTAINING MAXIMUM STRENGTH AND STABILITY.

THE BACKFILL MATERIAL SHOULD BE FREE OF ROCKS, FROZEN LUMPS, AND FOREIGN MATERIAL THAT COULD CAUSE HARD SPOTS OR DECOMPOSE TO CREATE VOIDS. BACKFILL MATERIAL SHOULD BE WELL GRADED GRANULAR MATERIAL THAT MEETS THE REQUIREMENTS OF AASHTO M-145 FOR SOIL CLASSIFICATION A-1. MAXIMUM PARTICLE SIZE OF THE SELECT MATERIAL NOT EXCEED 3 INCHES. BACKFILL MUST BE PLACED SYMMETRICALLY ON EACH SIDE OF THE STRUCTURE IN 6" LOOSE LIFTS. EACH LIFT IS TO BE COMPACTED TO A MINIMUM OF 90% DENSITY PER AASHTO T-180.

A HIGH PERCENTAGE OF SILT OR FINE SAND IN THE NATIVE SOILS SUGGESTS THE NEED FOR A WELL GRADED GRANULAR BACKFILL MATERIAL TO PREVENT SOIL MIGRATION.

DURING BACKFILL, ONLY SMALL TRACKED VEHICLES (D-4 OR SMALLER) SHOULD BE NEAR THE STRUCTURE AS FILL PROGRESSES ABOVE THE CROWN AND TO THE FINISHED GRADE. THE ENGINEER AND CONTRACTOR ARE CAUTIONED THAT THE MINIMUM COVER MAY NEED TO BE INCREASED TO HANDLE TEMPORARY CONSTRUCTION VEHICLE LOADS. (LARGER THAN D-4)

AS-BUILT
RE/SR: K. TRAN
Date: 01/21/2017

REGISTERED PROFESSIONAL ENGINEER DAVIS L. SCHAEFER C 47393 CIVIL STATE OF CALIFORNIA 12/31/16 7/16/15

PRE-447263-001-BCORR-PRE-F-PROFILE END PLAN LINE WORK DWG

BridgeCor

MARK	DATE	REVISION DESCRIPTION	BY
5	2/24/2015	REVISIONS PER EOR COMMENTS	SCC
4	1/29/2015	ADD. BACKFILL ZONE DETAIL.	SCC
3	1/7/2015	REVISED PLATE LAYOUT AND NOTATIONS	SCC
2	12/9/2014	REVISED NOTES	SCC
1	12/8/2014	REVISED PROFILES/ELEVATIONS	SCC

CONTECH ENGINEERED SOLUTIONS LLC
www.ContechES.com
9025 Centre Pointe Dr., Suite 400, West Chester, OH 45069
800-338-1122 513-645-7000 513-645-7993 FAX

CONTECH STRUCTURAL PLATE

LA PATA AVENUE GAP

SAN CLEMENTE, CA

PROJECT No.: 447263	SEQ. No.: 001	DATE: 11/6/2014
DESIGNED: XXX		DRAWN: SCC
CHECKED: SRT		APPROVED: XXX
SHEET NO.: 7 OF 9		

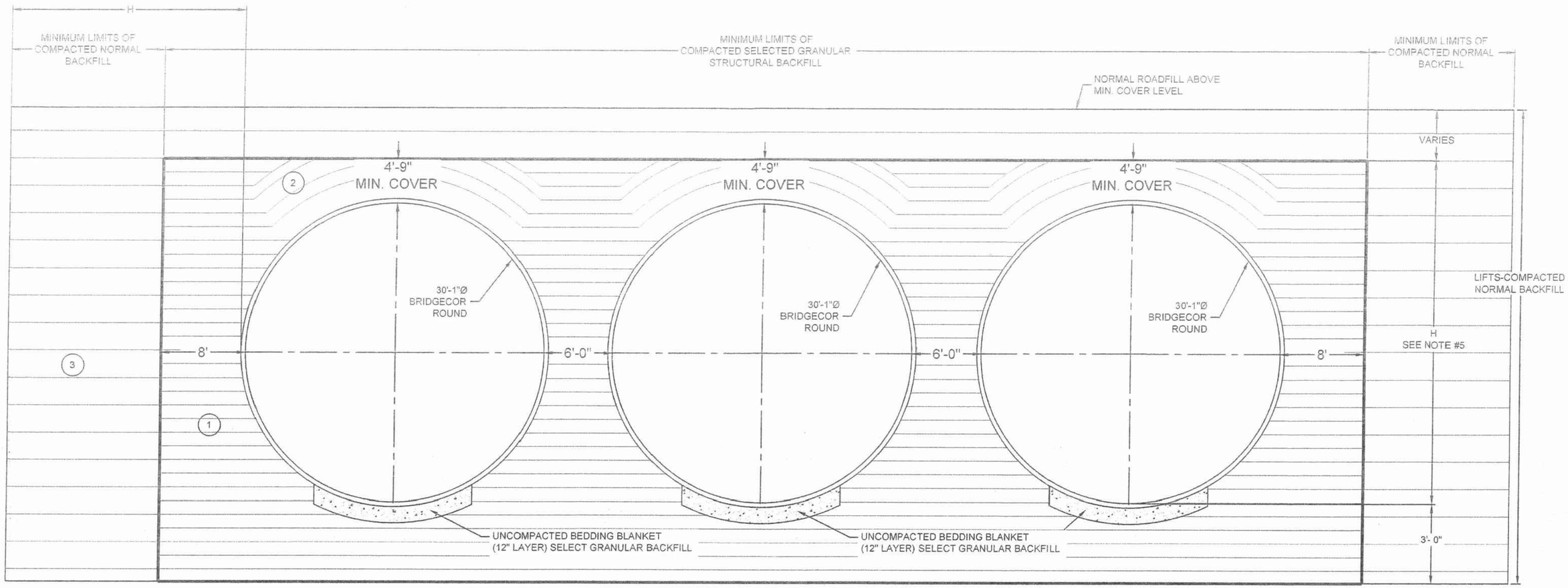

1 SELECT GRANULAR STRUCTURAL BACKFILL LIMITS.

2 INITIAL LIFTS OVER CROWN OF STRUCTURE AS INDICATED BY SHADED AREA TO BE COMPACTED TO REQUIRED DENSITY WITH HAND OPERATED EQUIPMENT OR WITH SMALL TRACTOR (D-4 OR SMALLER) DRAWN EQUIPMENT.

3 EMBANKMENT FILL

OUTLINES LIMITS OF STRUCTURAL BACKFILL

NOTES:

1. ALL SELECT GRANULAR BACKFILL TO BE PLACED IN A BALANCED FASHION IN THIN LIFTS (6"-8" LOOSE TYPICALLY) AND COMPACTED TO 90 PERCENT DENSITY PER AASHTO T-180.
2. CONTRACTOR IS RESPONSIBLE TO PROVIDE COMPLETE AND REGULAR MONITORING OF THE BRIDGECOR SHAPE DURING ALL BACKFILLING STEPS.
3. PREVENT EXCESSIVE DISTORTION OF SHAPE AS NECESSARY BY VARYING COMPACTION METHODS AND EQUIPMENT.
4. MINIMUM TRENCH WIDTH IS BASED ON AASHTO LRFD SECTION 12 SPECIFICATIONS.
5. H = STRUCTURE RISE + COVER.
6. SETTLEMENTS AT THE BRIDGE LOCATIONS SHALL BE MONITORED BY THE CONTRACTOR. PLACEMENT OF UNCOMPACTED BEDDING BLANKET SHALL NOT BEGIN UNTIL THE ENGINEER HAS MADE THE SETTLEMENT RELATED DETERMINATIONS DESCRIBED IN THE GEOTECHNICAL DESIGN REPORT.

ADDITIONAL BACKFILL NOTES:

SATISFACTORY BACKFILL MATERIAL, PROPER PLACEMENT, AND COMPACTION ARE KEY FACTORS IN OBTAINING MAXIMUM STRENGTH AND STABILITY.

THE BACKFILL MATERIAL SHOULD BE FREE OF ROCKS, FROZEN LUMPS, AND FOREIGN MATERIAL THAT COULD CAUSE HARD SPOTS OR DECOMPOSE TO CREATE VOIDS. BACKFILL MATERIAL SHOULD BE WELL GRADED GRANULAR MATERIAL THAT MEETS THE REQUIREMENTS OF AASHTO M-145 FOR SOIL CLASSIFICATION A-1. MAXIMUM PARTICLE SIZE OF THE SELECT MATERIAL NOT EXCEED 3 INChES. BACKFILL MUST BE PLACED SYMMETRICALLY ON EACH SIDE OF THE STRUCTURE IN 6" LOOSE LIFTS. EACH LIFT IS TO BE COMPACTED TO A MINIMUM OF 90% DENSITY PER AASHTO T-180.

A HIGH PERCENTAGE OF SILT OR FINE SAND IN THE NATIVE SOILS SUGGESTS THE NEED FOR A WELL GRADED GRANULAR BACKFILL MATERIAL TO PREVENT SOIL MIGRATION.

DURING BACKFILL, ONLY SMALL TRACKED VEHICLES (D-4 OR SMALLER) SHOULD BE NEAR THE STRUCTURE AS FILL PROGRESSES ABOVE THE CROWN AND TO THE FINISHED GRADE. THE ENGINEER AND CONTRACTOR ARE CAUTIONED THAT THE MINIMUM COVER MAY NEED TO BE INCREASED TO HANDLE TEMPORARY CONSTRUCTION VEHICLE LOADS. (LARGER THAN D-4)

AS-BUILT
RE/SR: K. TRAN
Date: 01/21/2017

REGISTERED PROFESSIONAL ENGINEER TRAVIS L. SCHNEIDER 47293 EXP. 12/31/16 STATE OF CALIFORNIA
3/11/15

BridgeCor

BACKFILL ZONE DETAIL

SCALE: 1" = 10'-0"

PRE-447263-001-BCORR-PRE-F-PROFILE END PLAN LINE WORK DWG

MARK	DATE	REVISION DESCRIPTION	BY
5	2/24/2015	REVISIONS PER EOR COMMENTS	SCC
4	1/29/2015	ADD. BACKFILL ZONE DETAIL.	SCC
3	1/7/2015	REVISED PLATE LAYOUT AND NOTATIONS	SCC
2	12/9/2014	REVISED NOTES	SCC
1	12/8/2014	REVISED PROFILES/ELEVATIONS	SCC

CONTECH ENGINEERED SOLUTIONS LLC
www.ContechES.com
9025 Centre Pointe Dr., Suite 400, West Chester, OH 45069
800-338-1122 513-645-7000 513-645-7993 FAX

CONTECH STRUCTURAL PLATE

LA PATA AVENUE GAP

SAN CLEMENTE, CA

PROJECT No.	SEQ. No.	DATE
447263	001	11/6/2014
DESIGNED: XXX		DRAWN: SCC
CHECKED: SRT		APPROVED: XXX
SHEET NO. 8 OF 9		

SPECIFICATIONS FOR MANUFACTURE AND INSTALLATION OF CONTECH BRIDGECOR ROUND STRUCTURE

I - GENERAL

1.0 STANDARDS AND DEFINITIONS

1.1 STANDARDS - All standards refer to latest edition unless otherwise noted.

1.1.1 ASTM A-761 "Corrugated Steel Structural Plate, Zinc Coated for Field-Bolted Pipe, Pipe-Arches and Arches" (AASHTO Designation M-167).

1.1.2 AASHTO LRFD Design Specification for Highway Bridges - Section 12.

1.1.3 AASHTO LRFD Construction Specification for Highway Bridges - Section 26.

1.2 DEFINITIONS

1.2.1 Engineer - In these specifications the word "Engineer" shall mean the Engineer of Record or Owner's designated engineering representative.

1.2.2 Manufacturer - In these specifications the word "Manufacturer" shall mean CONTECH Engineered Solutions. LLC 800-338-1122

1.2.3 Contractor - In these specifications the word "Contractor" shall mean the firm or corporation undertaking the execution of any installation work under the terms of these specifications.

1.2.4 Approved - In these specifications the word "approved" shall refer to the approval of the Engineer or his designated representative.

1.2.5 As Directed - In these specifications the words "as directed" shall refer to the directions to the Contractor from the Owner or his designated representative.

2.0 GENERAL CONDITIONS

2.1 The Contractor shall furnish all labor, material and equipment and perform all work and services except those set out and furnished by the Owner, necessary to complete in a satisfactory manner the site preparation, excavation, filling, compaction, grading as shown on the plans and as described therein. This work shall consist of all mobilization clearing and grading, grubbing, stripping, removal of existing material unless otherwise stated, preparation of the land to be filled, filling of the land, spreading and compaction of the fill, and all subsidiary work necessary to complete the grading of the cut and fill areas to conform with the lines, grades, slopes, and specifications. This work is to be accomplished under the observation of the Owner or his designated representative.

2.2 Prior to bidding the work, the Contractor shall examine, investigate and inspect the construction site as to the nature and location of the work, and the general and local conditions at the construction site, including without limitation, the character of surface or subsurface conditions and obstacles to be encountered on and around the construction site and shall make such additional investigation as he may deem necessary for the planning and proper execution of the work.

If conditions other than those indicated are discovered by the Contractor, the Owner shall be notified immediately. The material which the Contractor believes to be a changed condition shall not be disturbed so that the owner can investigate the condition.

2.3 The construction shall be performed under the direction of the Engineer.

2.4 All aspects of the structure design and site layout including foundations, backfill, end treatments and necessary scour consideration shall be performed by the Engineer.

Any installation guidance provided herein shall be endorsed by the Engineer or superceded by the Engineer's plans and specifications.

II - CONTECH BRIDGECOR ROUND PIPE STRUCTURE

1.0 GENERAL

1.1 Manufacturer shall fabricate the Round Pipe as shown on the plans. Fabrication shall conform to the requirements of ASTM A-761 and shall consist of plates, fasteners, and appurtenant items.

Plate thickness, end treatment and type of invert and foundation shall be as indicated on the plans. All manufacturing processes including corrugating, punching, curving and required galvanizing shall be performed within the United States of America .

1.2 The contractor shall verify all field dimensions and conditions prior to ordering materials.

2.0 DIMENSIONS

2.1 The proposed structure shall be a CONTECH BRIDGECOR (72) with the following dimensions:

Span (Diameter): 30'-1"
Gage: 8

2.2 All plan dimensions on the contract drawings are measured in a true horizontal plan unless otherwise noted.

3.0 ASSEMBLY AND INSTALLATION

3.1 Bolts and nuts shall conform to the requirements of ASTM A-449. The CONTECH BRIDGECOR Round Pipe shall be assembled in accordance with the plate layout drawings provided by the manufacturer and per the manufacturer's recommendations.

Bolts shall be tightened using an applied torque of between 100 and 300 ft.-lbs.

3.2 The 72S Round Pipe shall be installed in accordance with the plans and specifications, special provisions, the manufacturer's recommendations, and AASHTO LRFD Specification for Highway Bridges - Section 26.

3.3 Trench excavation shall be made in embankment material that is structurally adequate. The trench width shall be shown on the plans. Poor quality in situ embankment material must be removed and replaced with suitable backfill as directed by the Engineer.

3.4 Bedding preparation is critical to both structure performance and service life. The bed should be constructed to uniform line and grade to avoid distortions that may create undesirable stresses in the structure and/or rapid deterioration of the roadway. The bed should be free of rock formations, protruding stones, frozen lumps, roots, and other foreign matter that may cause unequal settlement.

3.5 Adequate soil bearing capacity or strength shall be provided to the Engineer. Foundation details shall be provided by the Engineer.

3.6 The structure shall be assembled in accordance with the Manufacturer's instructions. All plates shall be unloading and handled with reasonable care. Plates shall not be rolled or dragged over gravel rock and shall be prevented from striking rock or other hard objects during placement in trench or on bedding.

The structure shell shall be assembled on the invert starting at the outlet end. Circumferential seams shall be installed with the plate laps shingled downstream as viewed from the inside of the structure.

The structure shall be backfilled using clean well graded granular material that meets the requirements of AASHTO M-145 for soil classifications A-1.

Backfill must be placed symmetrically on each side of the structure in 6 to 8 inch loose lifts. Each lift shall be compacted to a minimum of 90 percent density per AASHTO T-180

3.7 Construction loads that exceed highway load limits are not allowed to cross the structure without approval from the Engineer.

Normal highway traffic is not allowed to cross the structure until the structure has been backfilled and paved. If the road is unpaved, cover allowance to accommodate rutting shall be as directed by the Engineer.

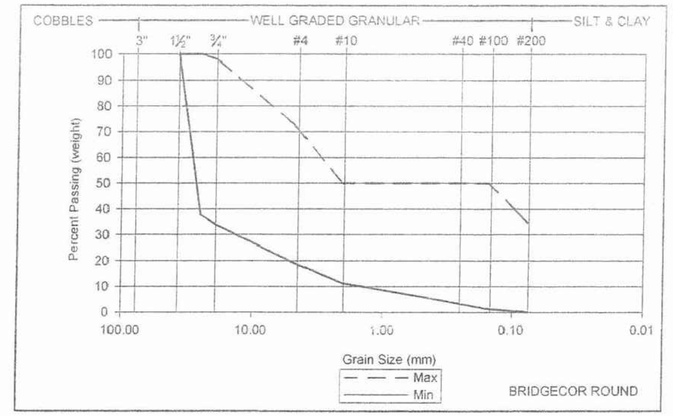

GROUP CLASSIFICATION	A-1-a	A-1-b
Sieve Analysis Percent Passing		
No. 10 (2.000 mm)	50 max.	----
No. 40 (0.425 mm)	30 max.	50 max.
No. 100 (0.150 mm)	----	----
No. 200 (0.075 mm)	15 max.	25 max.
Atterberg Limits for Fraction Passing No., 40 (0.425 mm)		
Liquid Limits	----	----
Plasticity Index	6 max.	6 max.
Usual Materials	Stone Fragment, Gravel and Sand	

NOTE: Atterberg Limits are modified to provide material that are primarily granular
* Fine beach sands, windblown sands, stream deposited sands, etc., exhibiting fine, rounded particles excluded.

AS-BUILT
RE/SR: K. TRAN
Date: 01/21/2017

REGISTERED PROFESSIONAL ENGINEER
DAVID L. SCHNEIDER
67393
EXP. 12/31/16
CIVIL
STATE OF CALIFORNIA
3/11/15

BridgeCor

MARK	DATE	REVISION DESCRIPTION	BY
5	2/24/2015	REVISIONS PER EOR COMMENTS	SCC
4	1/29/2015	ADD. BACKFILL ZONE DETAIL.	SCC
3	1/7/2015	REVISED PLATE LAYOUT AND NOTATIONS	SCC
2	12/9/2014	REVISED NOTES	SCC
1	12/8/2014	REVISED PROFILES/ELEVATIONS	SCC

CONTECH ENGINEERED SOLUTIONS LLC
www.ContechES.com
9025 Centre Pointe Dr., Suite 400, West Chester, OH 45069
800-338-1122 513-645-7000 513-645-7993 FAX

CONTECH STRUCTURAL PLATE

LA PATA AVENUE GAP

SAN CLEMENTE, CA

PRE-447263-001-BCORR-PRE-F-PROFILE END PLAN LINE WORK DWG

PROJECT No.	SEQ. No.	DATE
447263	001	11/6/2014
DESIGNED: XXX		DRAWN: SCC
CHECKED: SRT		APPROVED: XXX
SHEET NO. 9 OF 9		

I:\MERLIN\PROJECTS\CTIVE\447260\447263\447263-1\SUPERSPANDRAWINGS\PROPOSAL\PRE-447263-001-BCORR-PRE-F-PROFILE END PLAN LINE WORK DWG.DWG 2/24/2015 10:15 AM