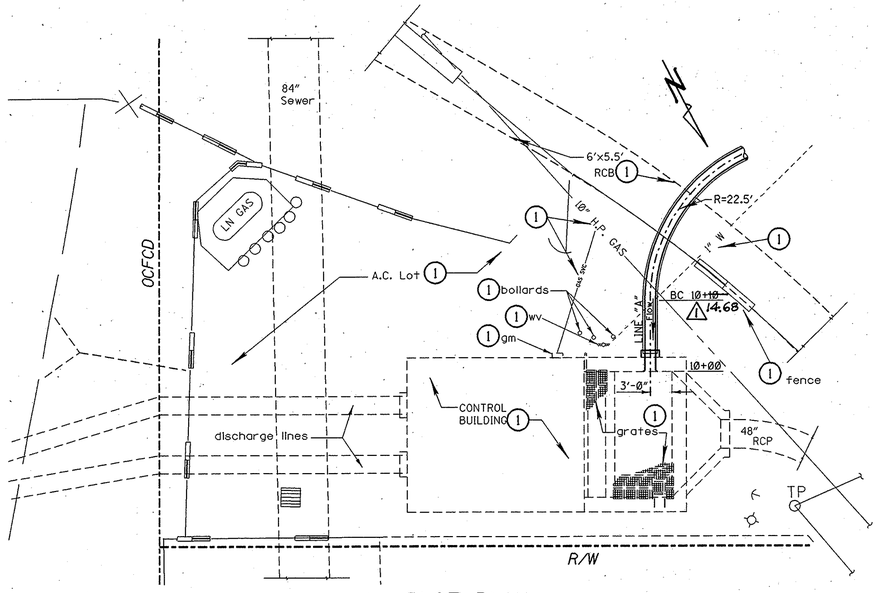

PLOT PLAN

Scale: 1" = 10'

LEGEND

1. Protect in place
2. To be removed
3. To be relocated by others
4. Remove and salvage
5. Sawcut
6. Join existing and feather to satisfaction of Engineer.
7. Remove interfering portions.
8. Match exist. edge of pavement.
9. Join existing
10. Adjust to grade
11. Relocate

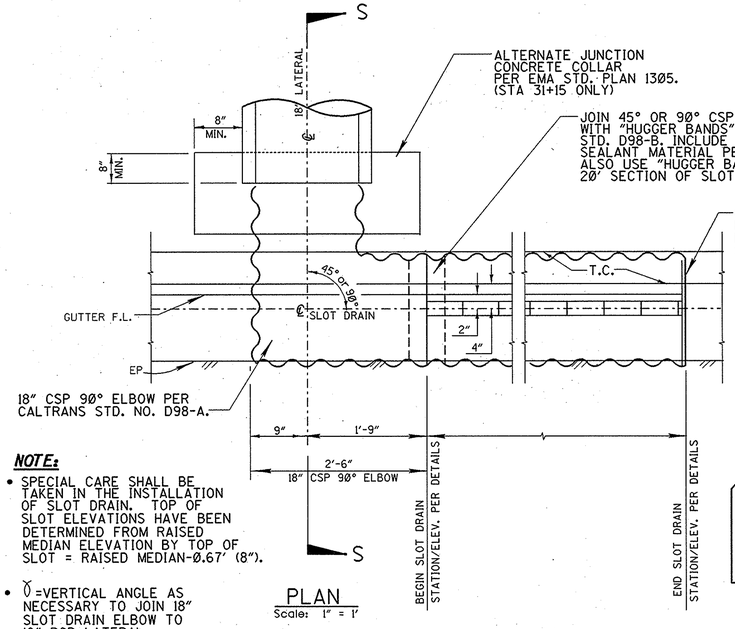

NOTE:

- SPECIAL CARE SHALL BE TAKEN IN THE INSTALLATION OF SLOT DRAIN. TOP OF SLOT ELEVATIONS HAVE BEEN DETERMINED FROM RAISED MEDIAN ELEVATION BY TOP OF SLOT = RAISED MEDIAN-0.67' (8").
- ∅ =VERTICAL ANGLE AS NECESSARY TO JOIN 18" SLOT DRAIN ELBOW TO 18" RCP LATERAL.

PLAN

Scale: 1" = 1'

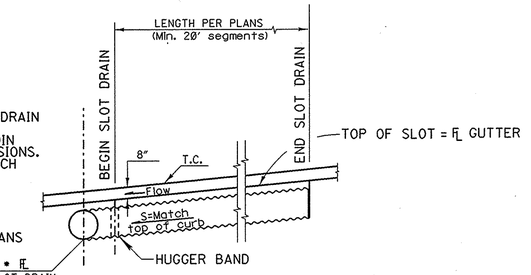

TYPICAL SLOT DRAIN PROFILE

Not To Scale

•SLOT DRAIN JOIN @ 31+15 SHOWN. FOR SLOT DRAIN JOINS @ 29+15, SEE SHEET 15A.

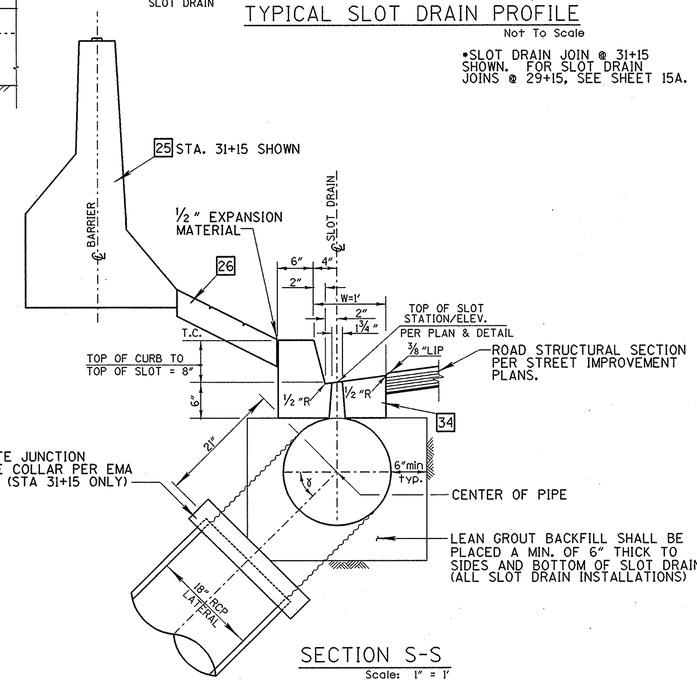

SECTION S-S

Scale: 1" = 1'

NOTE:

- ALL REINFORCEMENT PER EMA STD. PLAN NO. 1314 UNLESS OTHER WISE NOTED.
- WHERE PRACTICABLE, BEND EXISTING WALL STEEL IN DIAMOND SHAPE AROUND INLET OPENING.
- INSTALL WATERSTOP ALONG BREAK-OUT TO COMPLETELY ENCIRCLE INLET OPENING, *PER SPECIFICATIONS.*

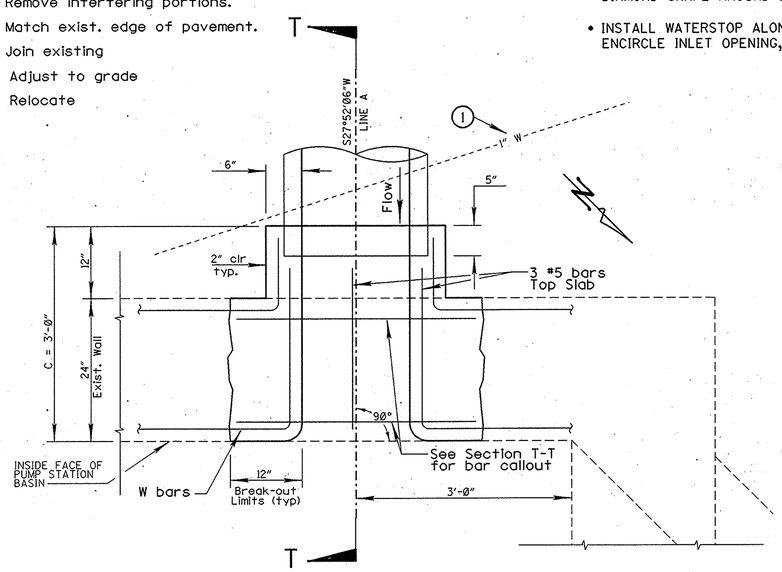

PLAN

Scale: 1" = 1'

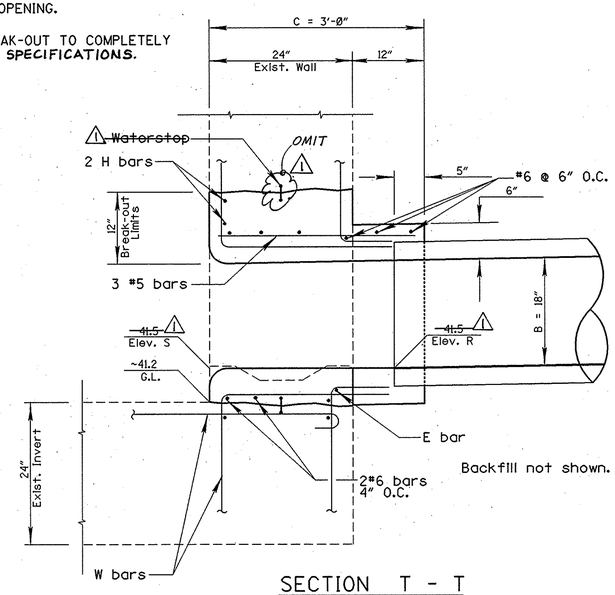

SECTION T - T

Scale: 1" = 1'

LINE "A"

Scale: As Shown

CONSTRUCTION NOTES

25 Construct Type 50C concrete median barrier per Caltrans Std. Plan A75A and details sheet 2.

26 Construct median with pattern stamped concrete per details sheet 2.

34 Construct PCC curb and gutter, type A3-8, per APWA Std. Plan No. 104-0-0C.

SLOT DRAIN

Scale: As Shown

RECORD DRAWING

½ 0 1 2
3 inches on original drawing

CAUTION: A 10" HIGH PRESSURE GAS LINE RUNS PARALLEL AND BENEATH HARBOR BLVD. CONTRACTOR TO USE EXTREME CARE WHEN WORKING IN VICINITY OF THIS UTILITY.

MARK	DATE	DESCRIPTION
1	4-95	REVISE AS SHOWN
R	4-93	Substitute sheet 14A for sheet 14.

REVISIONS

PREPARED UNDER REGISTERED PROFESSIONAL ENGINEER No. C 48526 Exp. 6-30-96 CIVIL STATE OF CALIFORNIA

TED RIGONI
RCE 48526 (exp. 06-30-96)

5-19-93
DATE

ORANGE COUNTY ENVIRONMENTAL MANAGEMENT AGENCY

HARBOR BLVD. IMPROVEMENTS

LOCAL DRAINAGE

LINE "A" AND SLOT DRAIN

DESIGNED TCR
DRAWN SG
CHECKED RAH
SCALE AS SHOWN
DATE APR '93
DRAWING NO.
SHEET 14A OF 60