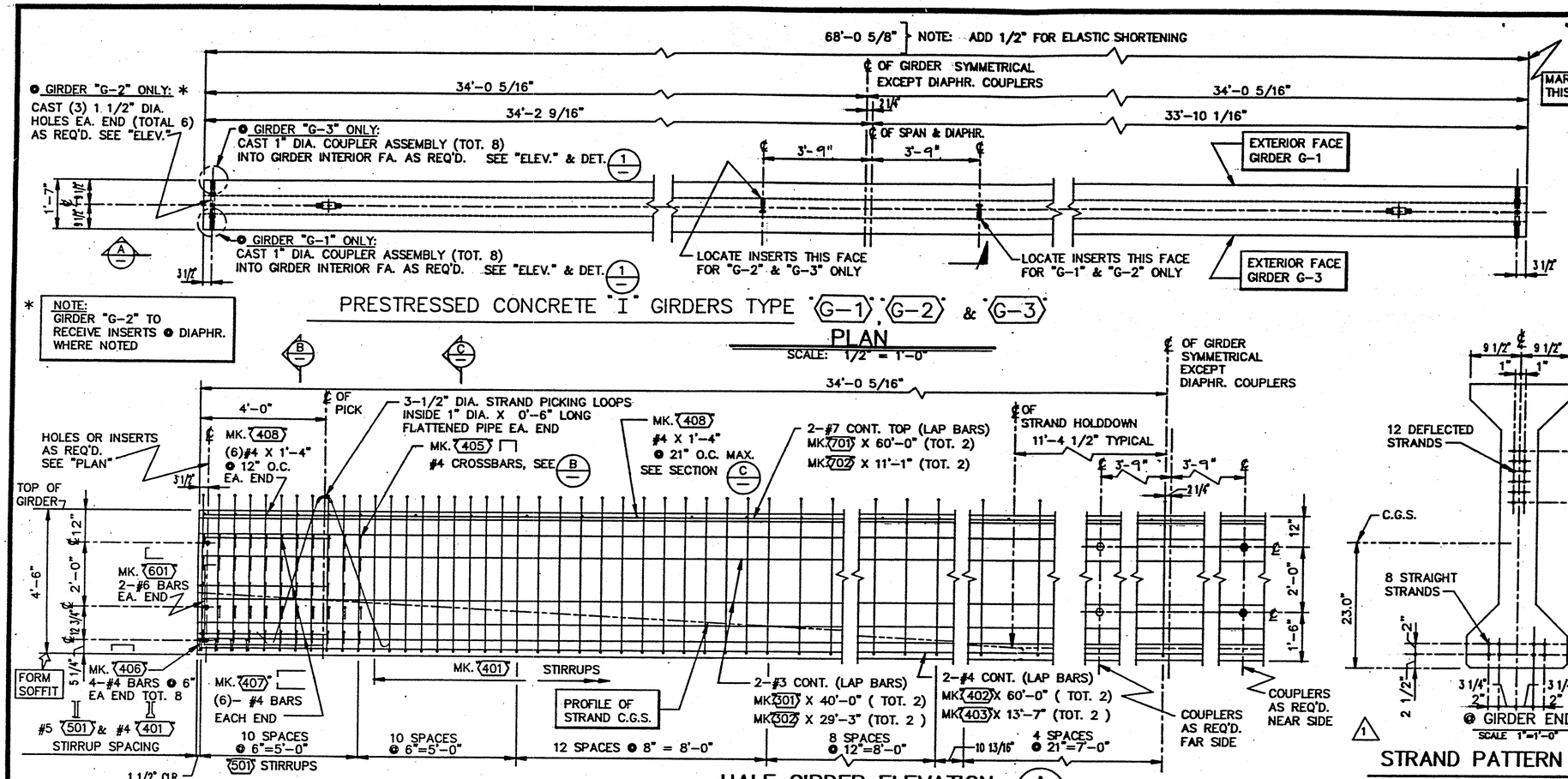

PRESTRESSED CONCRETE "I" GIRDERS TYPE "G-1", "G-2" & "G-3"

PLAN

SCALE: 1/2" = 1'-0"

* NOTE: GIRDER "G-2" TO RECEIVE INSERTS ● DIAPHR. WHERE NOTED

HALF GIRDER ELEVATION (A)

SCALE: 1/2" = 1'-0"

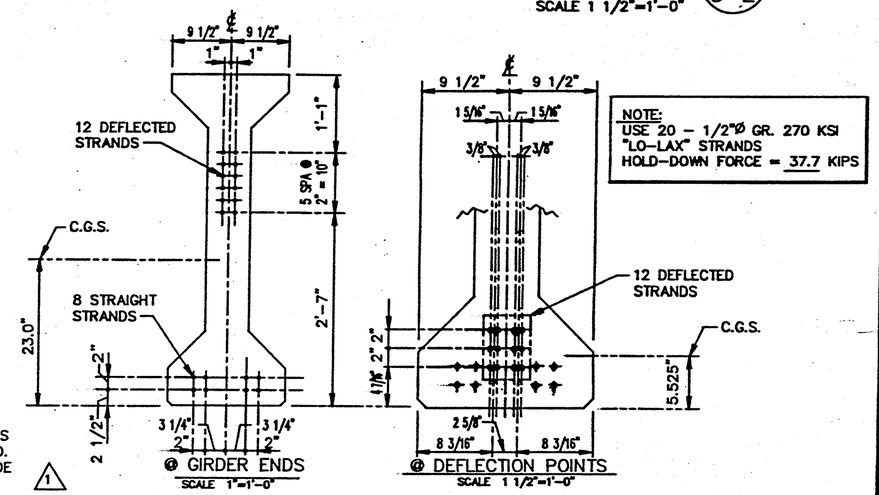

STRAND PATTERN @ INTERIOR "I" GIRDERS TYPE "G-2"

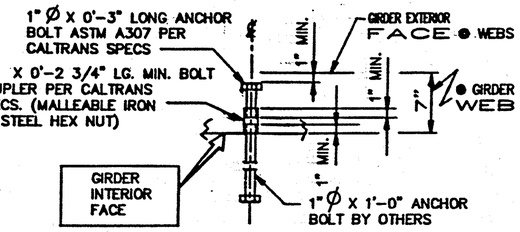

TYPICAL INSERT ASSEMBLY DETAIL 1 / G-2

SCALE 1 1/2"=1'-0"

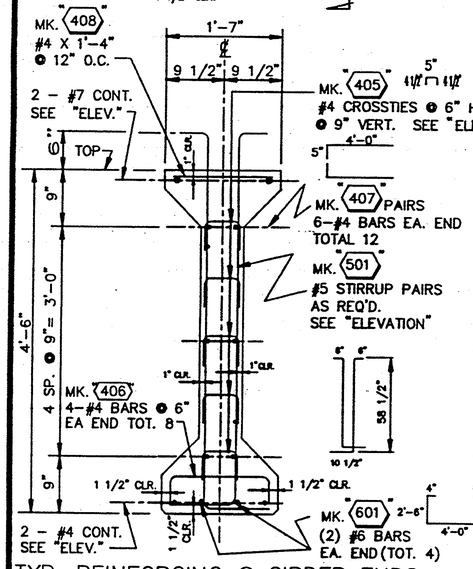

TYP. REINFORCING @ GIRDER ENDS

SECTION (B)

SCALE 1"=1'-0"

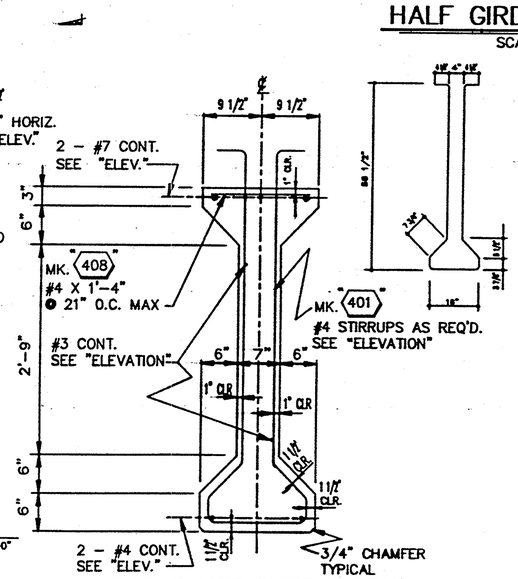

TYP. GIRDER INTERM. REINF.

SECTION (C)

SCALE 1"=1'-0"

THE PROFESSIONAL ENGINEER'S SEAL HERON INDICATES THAT THIS SHOP DRAWING CONFORMS TO THE DESIGN SHOWN BY THE ENGINEER OF RECORD, RICHARD HART, AND IS NOT INTENDED AS A CERTIFICATION OF THE DESIGN.

ORIGINAL STAMPED & SEALED BY LUCZENCZYN JAROSLAW R.C.E. NO.C044060 EXP. 6/30/93 (3)

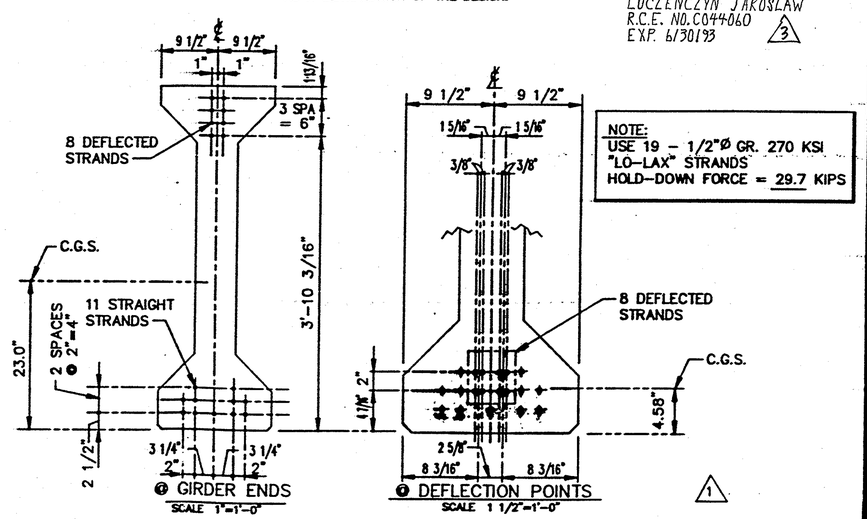

STRAND PATTERN @ EXTERIOR "I" GIRDERS TYPE "G-1" & "G-3"

BRIDGE NO. (SA 29) W.O. NO. R09318

UNIT	MAKE	VOL. CU. YDS.	APPROX. WT.
G-1	2	9.8	20.04 TONS
G-2	22	9.8	20.04 TONS
G-3	2	9.8	20.04 TONS

NO.	DATE	REVISIONS & ISSUES	BY	APP.
2	2/96	AS-BUILT		
1	5-24-93	GENERAL REVISIONS	RM	
0	5-03-93	ISSUED FOR APPROVAL	RM	

PACIFIC PRECAST ASSOCIATES
A JOINT VENTURE
P.O. BOX 308 PERRIS, CA 92572-0308

GRIFFITH COMPANY
2020 SOUTH YALE STREET SANTA ANA, CA 92704

HARBOR BLVD. BRIDGE
ORANGE CO. ENVIRONMENTAL AGENCY - SANTA ANA, CA

P.S. CONCRETE GIRDER TYPES "G-1", "G-2" & "G-3"

DESIGNED	DRAWN RAM	DATE APRIL 1993	SCALE NOTED	REV. NO. 1	DWG. NO. G-2
CHECKED	CHECKED	PR. ENGR.			
CHIEF ENGR.		PROJ. NO. 3304		SHEET 2 OF 3	