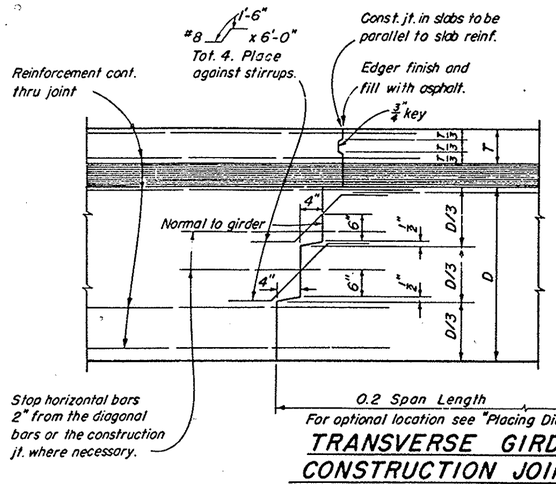

TRANSVERSE GIRDER CONSTRUCTION JOINTS
DETAIL J-3

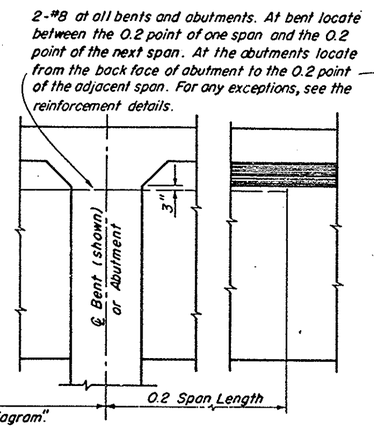

REINFORCEMENT
DETAIL J-1

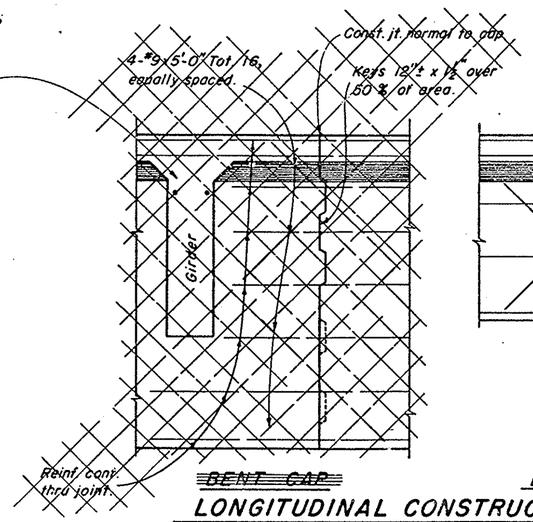

BENT CAP

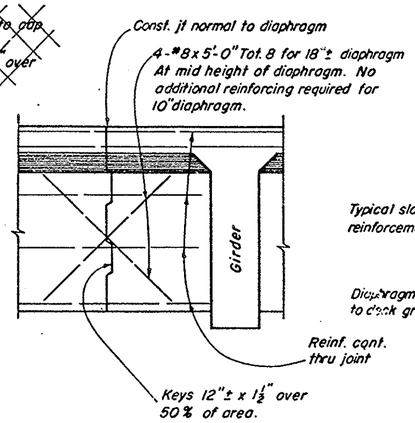

DIAPHRAGMS

LONGITUDINAL CONSTRUCTION JOINT
DETAIL J-4

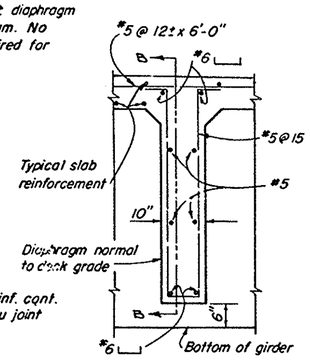

INTERMEDIATE DIAPHRAGM SECTION
DETAIL D-1

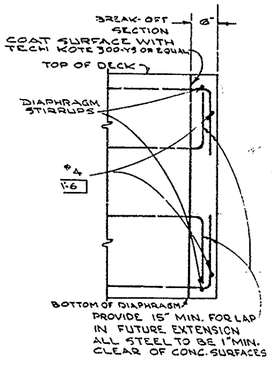

SECTION B-B
AT NORTH EXTERIOR FACE OF BRIDGE

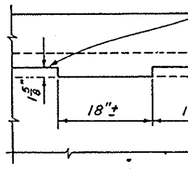

SECTION A-A

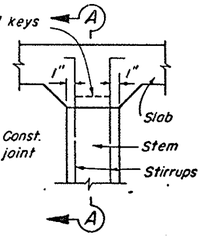

PART SECTION
INTERIOR GIRDER

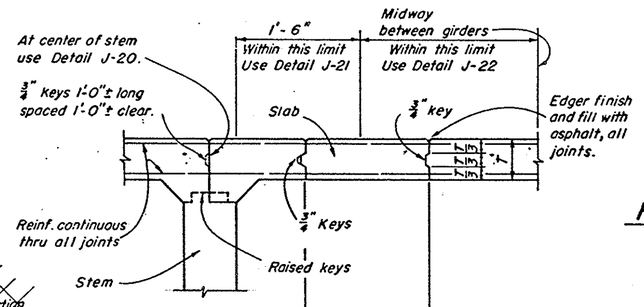

DETAIL J-20 DETAIL J-21 DETAIL J-22

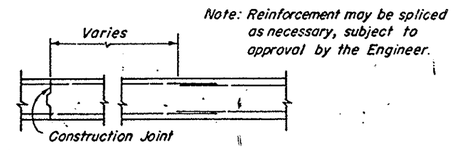

Note: Reinforcement may be spliced as necessary, subject to approval by the Engineer.

REINFORCEMENT SPLICE
IN DECK SLAB
DETAIL S-1

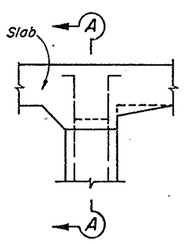

PART SECTION
EXTERIOR GIRDER
WITH SLAB CANTILEVER

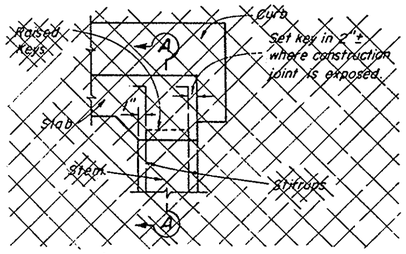

PART SECTION
EXTERIOR GIRDER
WITH CURB

KEY-GIRDER STEM TO SLAB
DETAIL J-5

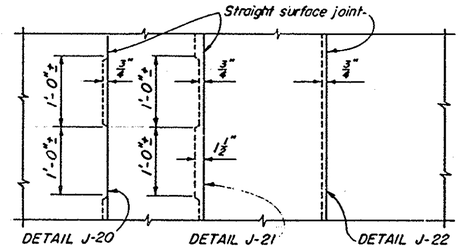

DECK SLAB
LONGITUDINAL CONSTRUCTION JOINT

Note: Longitudinal construction joints in slab, if required, are to be located at edge of traffic lanes except as approved by the Engineer.

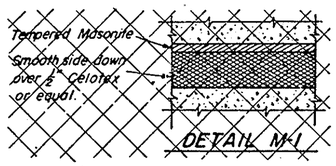

DETAIL M-1

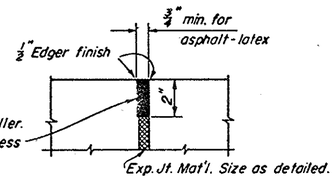

LATEX AT EXPANSION JOINT
DETAIL L-1

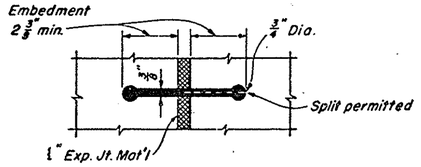

RUBBER WATERSTOP
DETAIL W-1

Bridge SA-38
Hamilton Street
Sheet 12 of 18
Red: 22.5:1 Scale-None
Vellum-Pencil

MICROFILMED
JUL 6 1960

HAMILTON ST. BRIDGE
SA - 38

MISCELLANEOUS DETAILS
NONE
Sheet 12 of 18