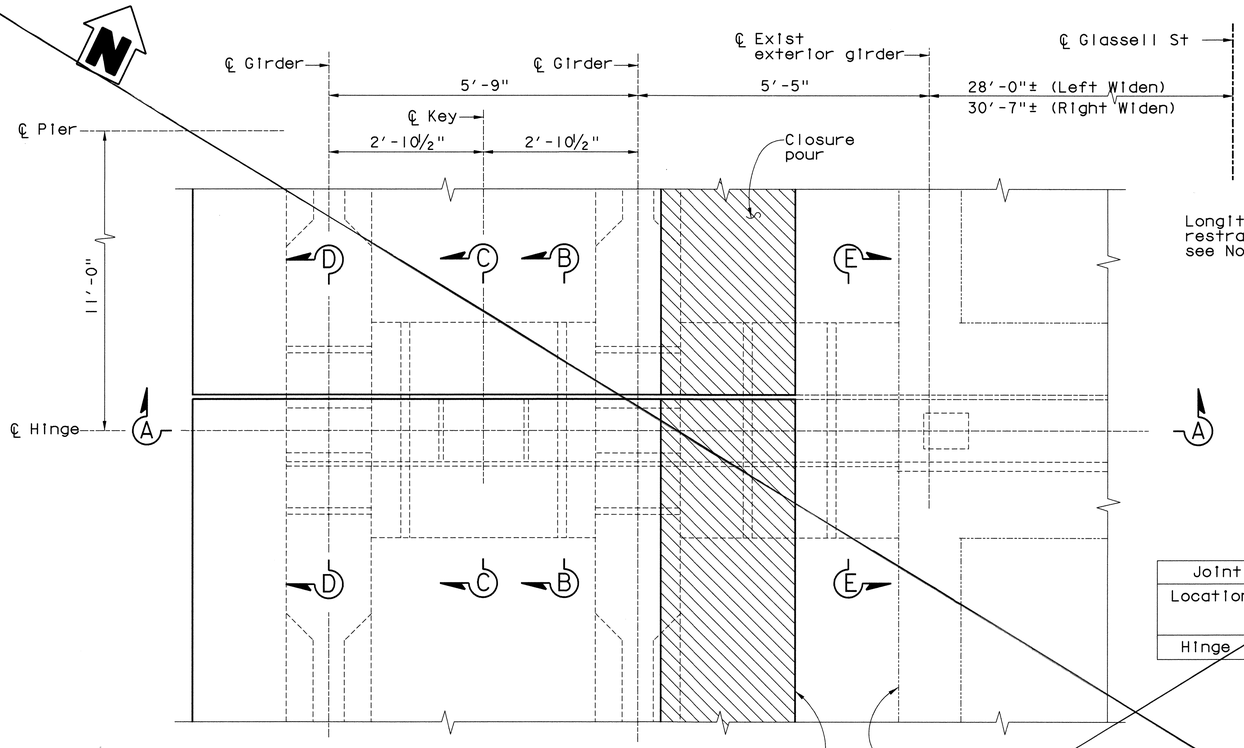


Note:
Left Widen shown, right widen similar, but opposite hand

## PLAN
¾" = 1'-0"

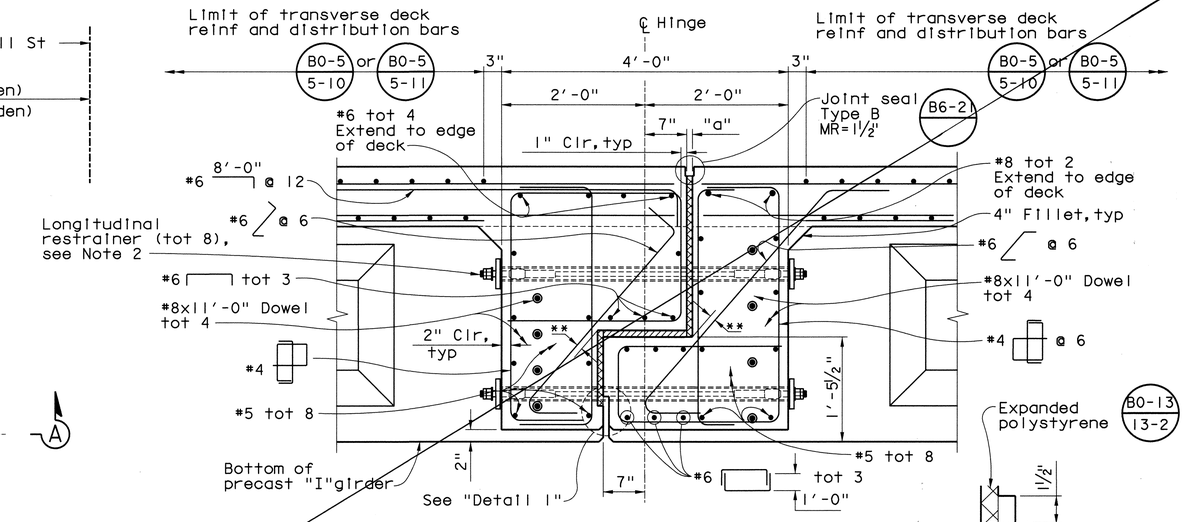


** - 1" Clr

| Joint Information | | "a" Dimension | | |
|---|---|---|---|---|
| Location | Movement Rating (MR) | Winter <40 | Spring & Fall >40, <80 | Sumer >80 |
| Hinge | 1½" | 1⅜" | 1" | ¾" |

## SECTION B-B
1" = 1'-0"

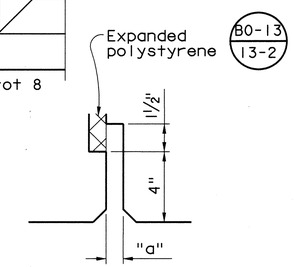


## DETAIL 1
No Scale

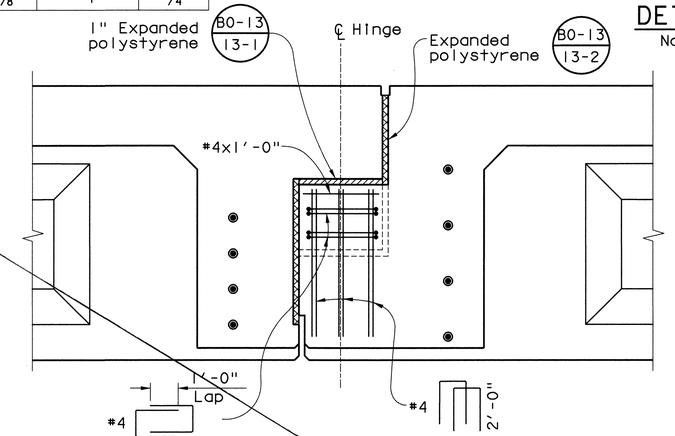


## SECTION C-C
1" = 1'-0"

DELETED

Note:
For information not shown, see "Section B-B"

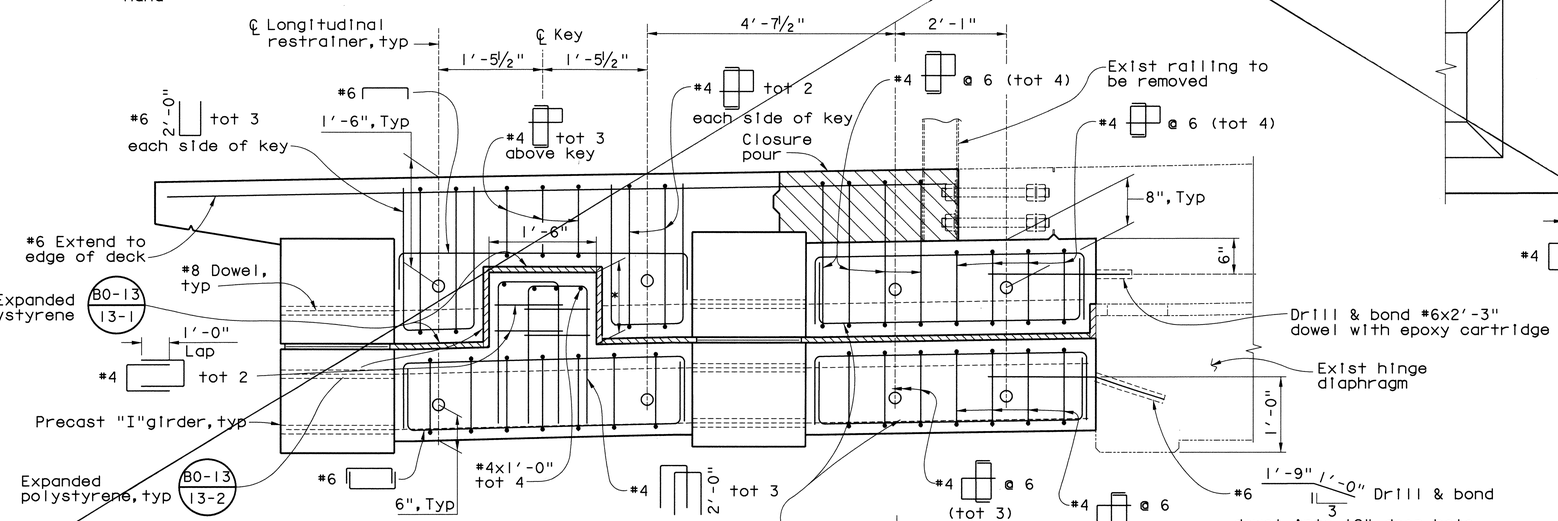


* - 1'-0" Min

## SECTION A-A
1" = 1'-0"

Notes:
1. For Section "D-D", "E-E" & "F-F", see "Hinge Details No. 2" sheet.
2. See "Cable Unit Restrainer Details" on "Hinge Details No. 2" sheet.

Note:
Contractor shall verify all controlling field dimensions before ordering or fabricating any material


W. Reo & Associates, Inc.
600 The City Parkway West, Suite 310
Orange CA. 92868
PH: (714) 456-0280
FAX: (714) 456-0295


ORANGE COUNTY
PUBLIC FACILITIES AND RESOURCES DEPARTMENT

GLASSELL STREET BRIDGE WIDENING
OVER SANTA ANA RIVER

# HINGE DETAILS NO. 1

| MARK | DATE | DESCRIPTION |
|---|---|---|
| | | |

REVISIONS

PREPARED UNDER RESPONSIBLE CHARGE OF:
REGISTERED PROFESSIONAL ENGINEER
SHAFI M. SHARIFIAN
No. CE 49697
Exp. 9-30-04
CIVIL
STATE OF CALIFORNIA
7/19/02
DATE

| DESIGNED K. RUSSELL | | SHEET |
|---|---|---|
| DRAWN G. BUELOW | CHECKED S. SHARIFIAN | 60 |
| SCALE AS SHOWN | DATE 7/19/02 | DRAWING NO. OF 70 |

Date Plotted: $DATE$
File Name: $FILE$

Border sheet last modified 09-Nov-1999