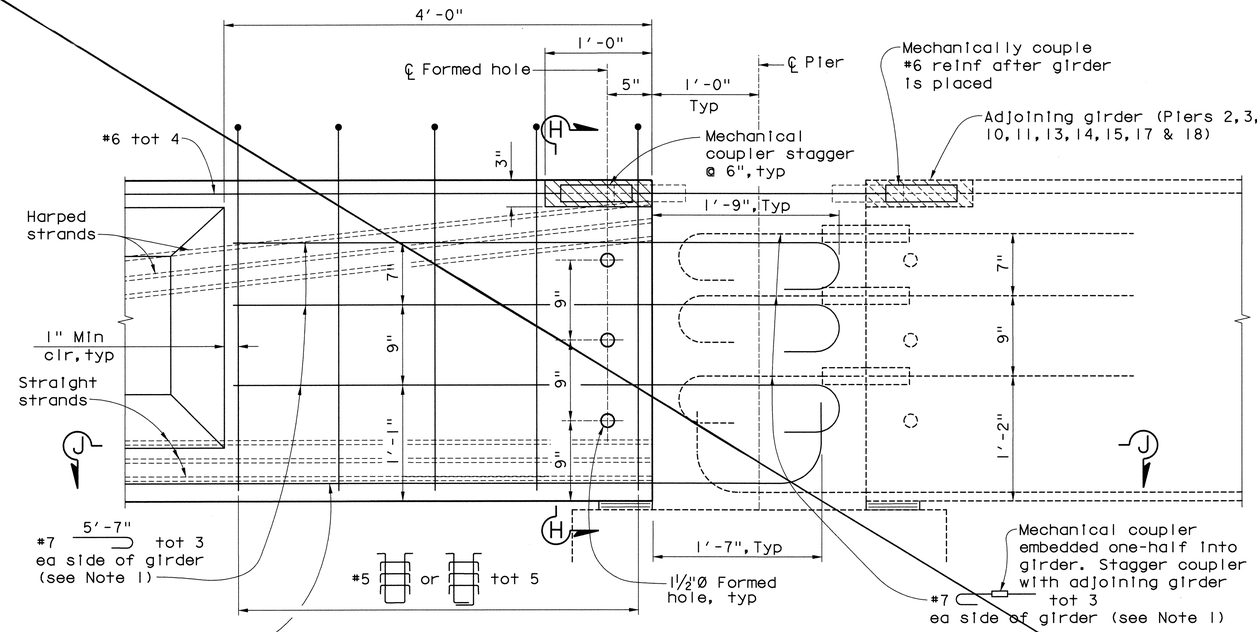

DETAIL 3
1" = 1'-0"

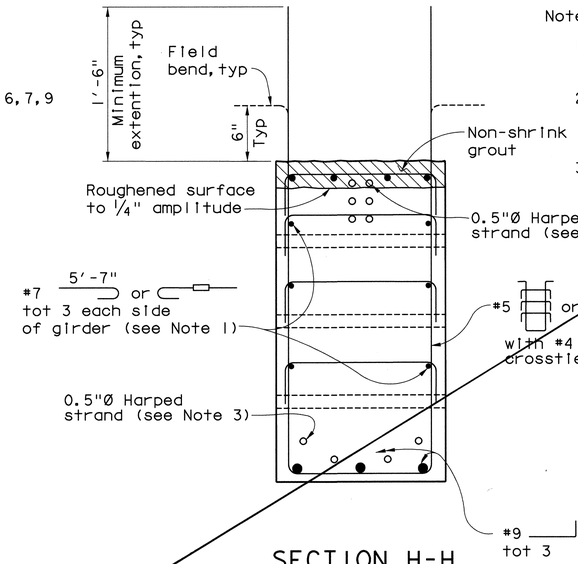

SECTION H-H
1½" = 1'-0"

Note:

1. Provide mechanical coupler at one end of girder to facilitate placement of girders. Hooks to be turned inward to clear adjoining reinf.
2. Contractor to provide drawings to Engineer indicating location and type of mechanical couplers to be used. Provide 1" minimum concrete cover to coupler.
3. For harped and straight strands layout, see "Girder Details No. 1 & No. 2" sheets.

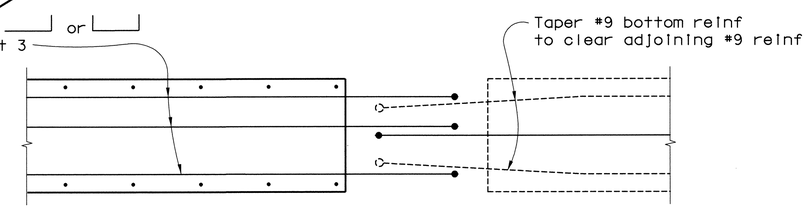

SECTION J-J
1:50

DELETED

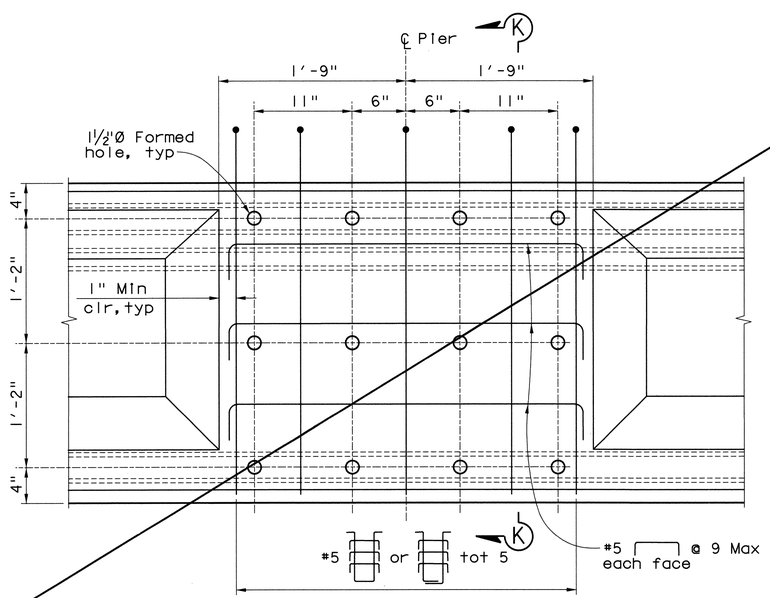

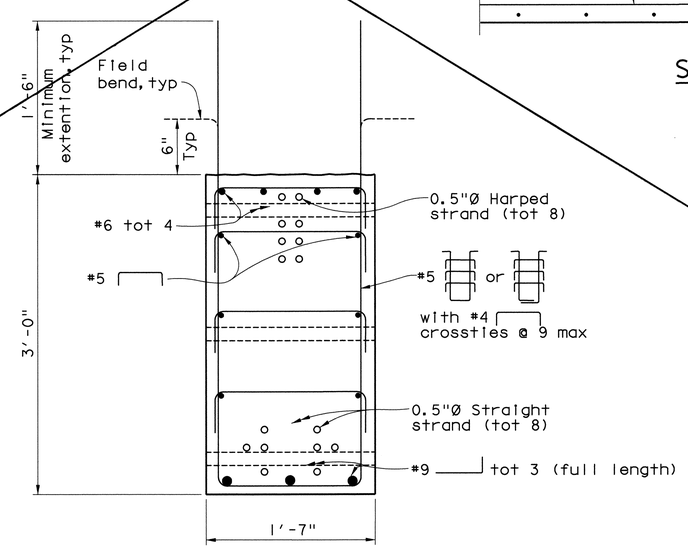

SECTION K-K
1½" = 1'-0"

Note:
Contractor shall verify all controlling field dimensions before ordering or fabricating any material

W. Koo & Associates, Inc.
600 The City Parkway West, Suite 310
Orange CA. 92868
PH: (714) 456-0280
FAX: (714) 456-0295

ORANGE COUNTY
PUBLIC FACILITIES AND RESOURCES DEPARTMENT

GLASSELL STREET BRIDGE WIDENING
OVER SANTA ANA RIVER

MARK	DATE	DESCRIPTION

REVISIONS

PREPARED UNDER RESPONSIBLE CHARGE OF:
REGISTERED PROFESSIONAL ENGINEER SHAFI M. SHARIFIAN No. CE 49697 Exp. 9-30-04 CIVIL STATE OF CALIFORNIA
7/19/02
DATE

GIRDER DETAILS NO. 3

DESIGNED K. RUSSELL
DRAWN G. BUELOW
CHECKED S. SHARIFIAN
SCALE AS SHOWN
DATE 7/19/02
DRAWING NO.
SHEET 57 OF 70

Date Plotted: $DATE$
File Name: $FILE$

Border sheet last modified 09-Nov-1999