SUPERSEDED AND REPLACED BY SHEET 52R.

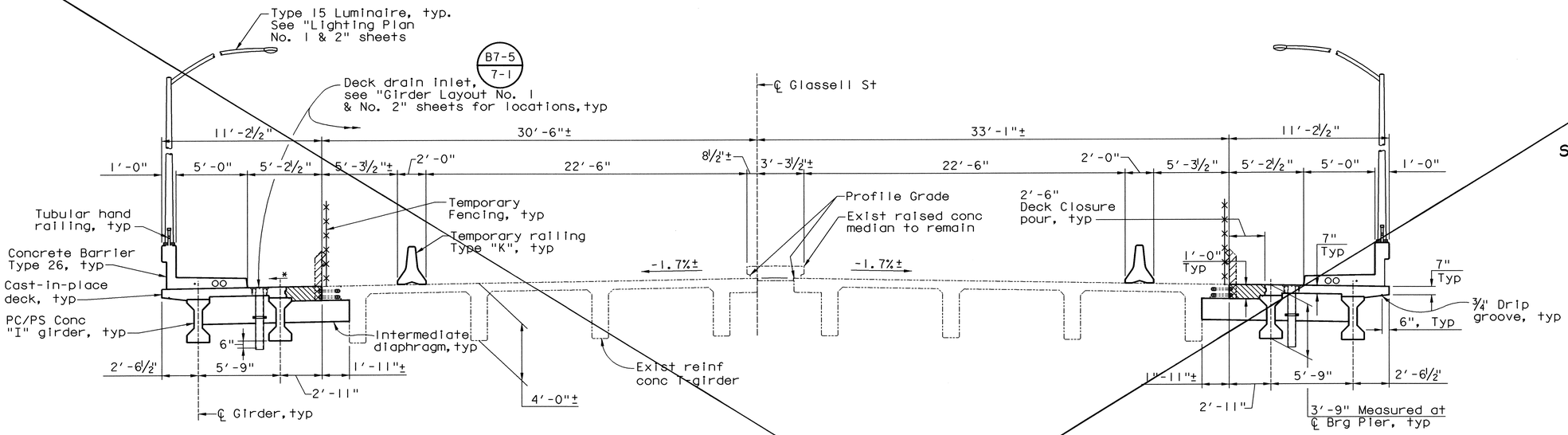

TYPICAL SECTION

¼" = 1'-0"

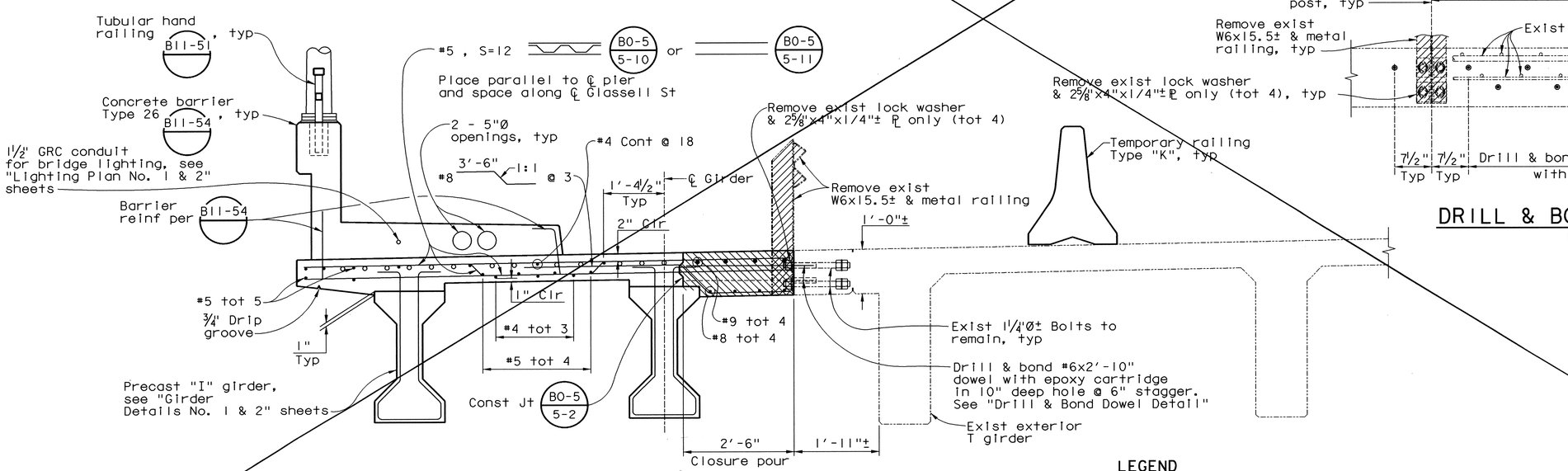

PART TYPICAL SECTION

¼" = 1'-0"

* Match exist cross slope

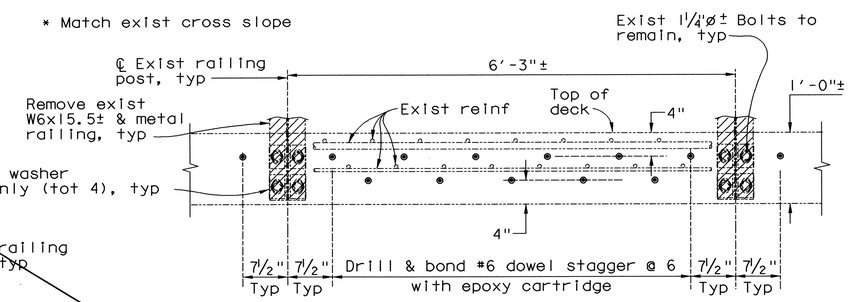

DRILL & BOND DOWEL DETAIL

1" = 1'-0"

LEGEND

- Denotes Bridge Removal (Portion)
- Denotes Closure Pour
- ● Denotes Distribution Reinforcement
- ○ Denotes Additional Longitudinal Reinforcement, see "Longitudinal Deck Reinforcement" sheet.

Note:
Contractor shall verify all controlling field dimensions before ordering or fabricating any material

W. Koo & Associates, Inc.
600 The City Parkway West, Suite 310
Orange CA. 92868
PH: (714) 456-0280
FAX: (714) 456-0295

ORANGE COUNTY
PUBLIC FACILITIES AND RESOURCES DEPARTMENT

GLASSELL STREET BRIDGE WIDENING
OVER SANTA ANA RIVER

TYPICAL SECTION

MARK	DATE	DESCRIPTION

REVISIONS

PREPARED UNDER RESPONSIBLE CHARGE OF:
REGISTERED PROFESSIONAL ENGINEER
SHAFI M. SHARIFAN
No. CE 49607
Exp. 9-30-04
CIVIL
STATE OF CALIFORNIA
8/22/02
DATE

DESIGNED K. RUSSELL		SHEET
DRAWN G. BUELOW	CHECKED S. SHARIFAN	52
SCALE: AS SHOWN	DATE: 7/19/02	DRAWING NO.

OF 70

Date Plotted: 01/15/03

File Name: i:\010-14\glassell\gl_ts.dgn

Border sheet last modified 09-Nov-1999