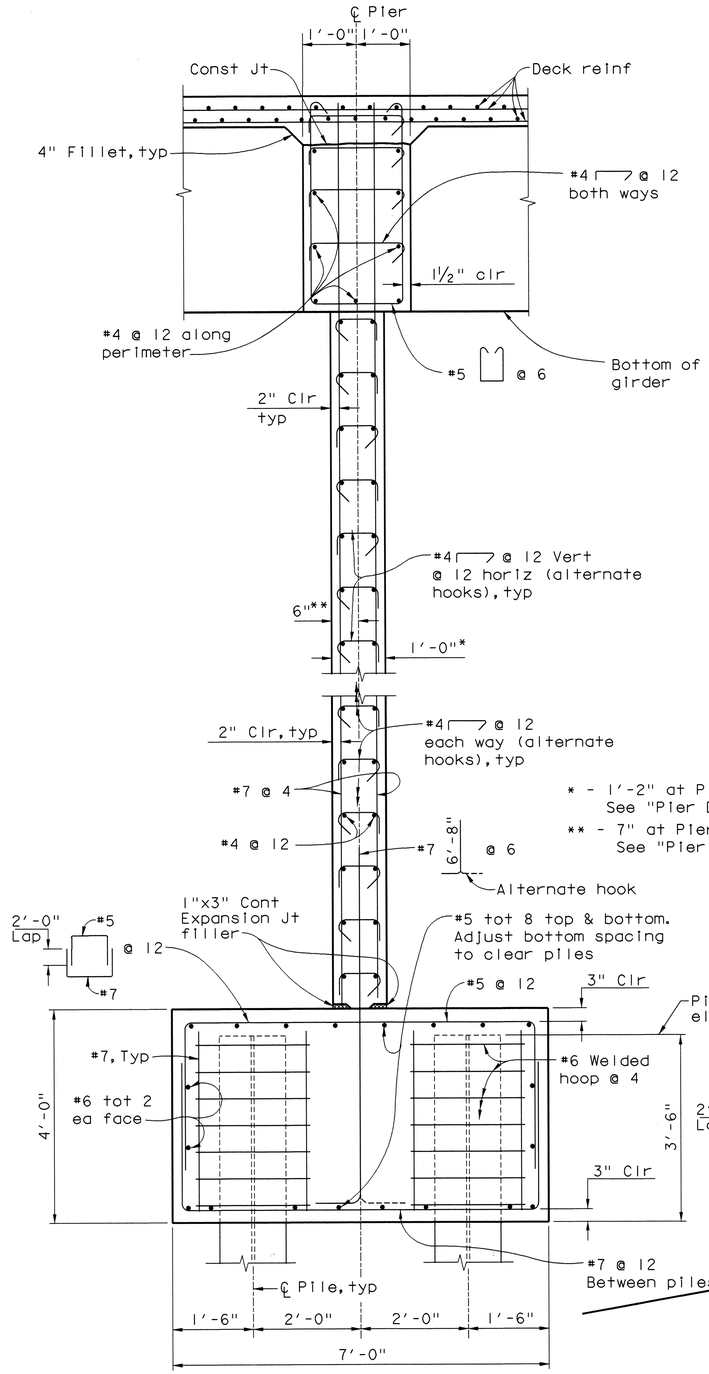

SECTION A-A

¾" = 1'-0"

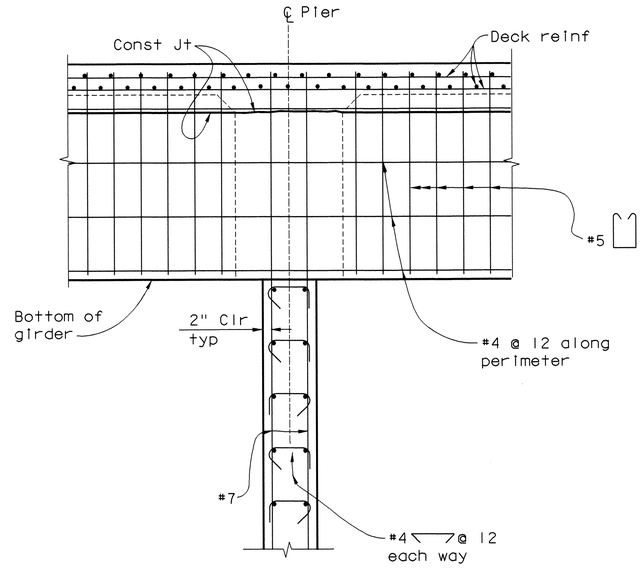

SECTION B-B

¾" = 1'-0"

* - 1'-2" at Piers 10-18 (right).
See "Pier Details No. 5" sheet

** - 7" at Piers 10-18 (right).
See "Pier Details No. 5" sheet

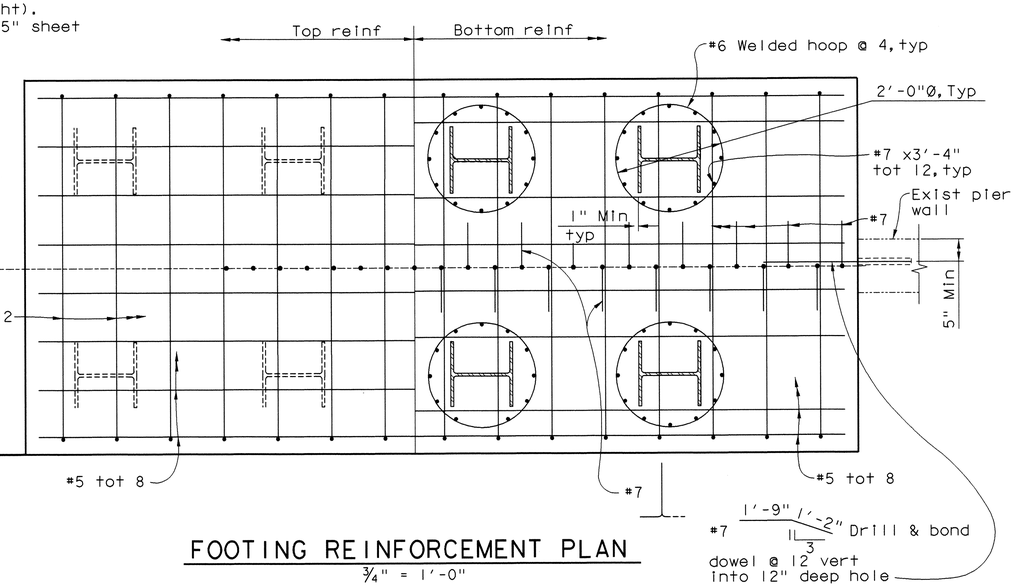

FOOTING REINFORCEMENT PLAN

¾" = 1'-0"

Note:
Contractor shall verify all controlling field dimensions before ordering or fabricating any material

Notes:

1. Contractor has to provide temporary lateral support for pier wall until girders and end diaphragms are constructed.

W. Koo & Associates, Inc.
600 The City Parkway West, Suite 310
Orange CA. 92868
PH: (714) 456-0280
FAX: (714) 456-0295

MARK	DATE	DESCRIPTION

REVISIONS

PREPARED UNDER RESPONSIBLE CHARGE OF:

REGISTERED PROFESSIONAL ENGINEER
SHAFI M. SHARIFAN
No. CE 49697
Exp. 9-30-06
CIVIL
STATE OF CALIFORNIA
7/18/05
DATE

ORANGE COUNTY
RESOURCES AND DEVELOPMENT
MANAGEMENT DEPARTMENT

GLASSELL STREET BRIDGE WIDENING
OVER SANTA ANA RIVER

PIER DETAILS NO. 2

DESIGNED X. WU		SHEET
DRAWN G. BUELOW	CHECKED S. SHARIFAN	47R
SCALE AS SHOWN	DATE 7/19/02	DRAWING NO. OF 70

Date Plotted: 07/25/2005

File Name: t:\cad\010-14\glassell\gl_pd2.dgn

Border sheet last modified 09-Nov-1999