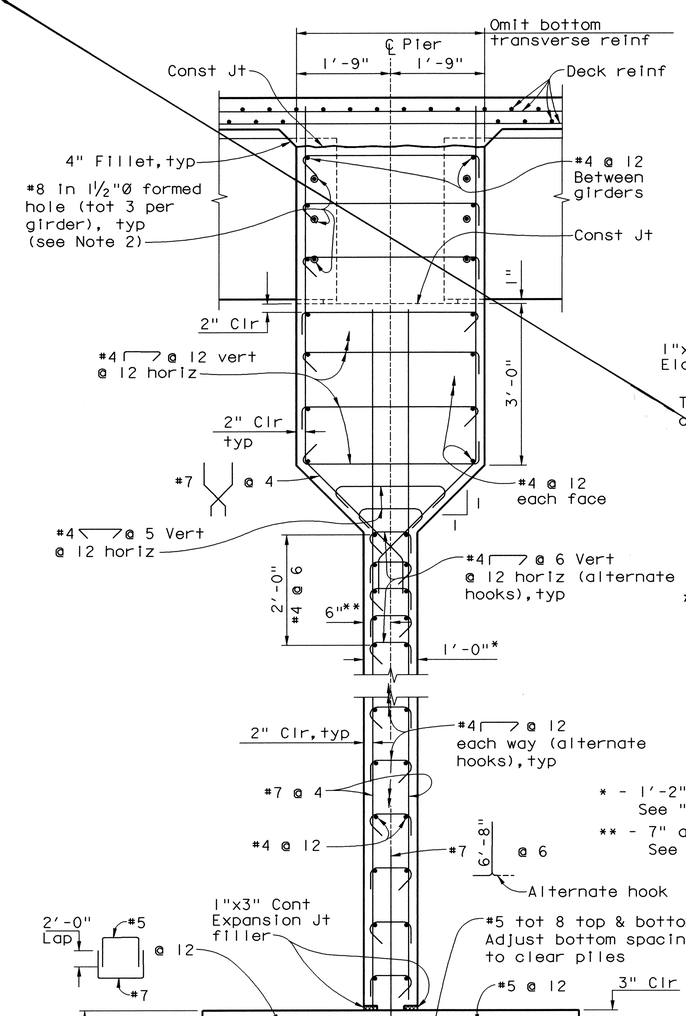


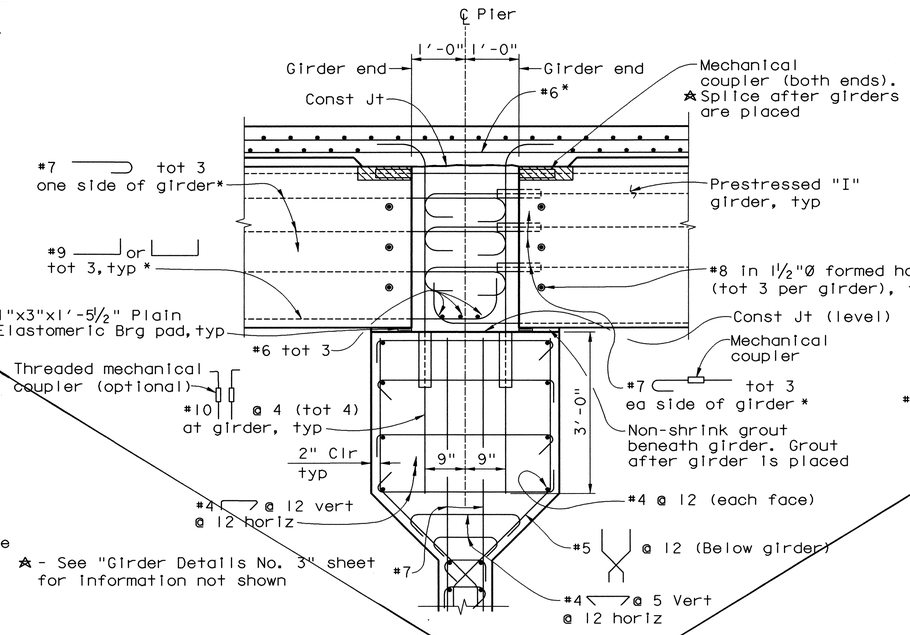


PIERS 2, 3, 5, 6, 7, 9, 10, 11, 13, 14, 15, 17 & 18

✱ - See "Girder Details No. 3" sheet for information not shown

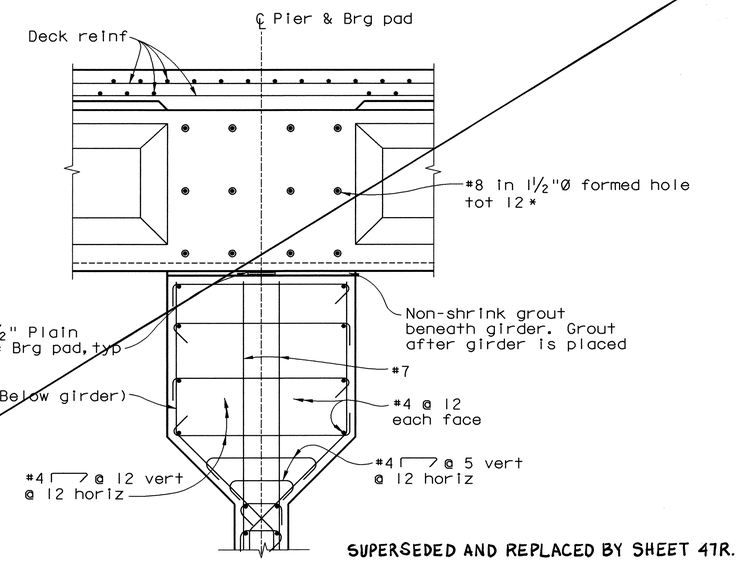


SUPERSEDED AND REPLACED BY SHEET 47R.

PIERS 4, 8, 12 & 16

SECTION B-B

¾" = 1'-0"

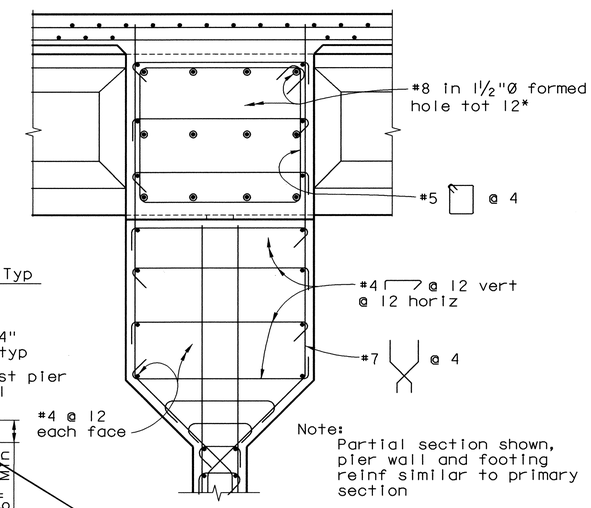


Note:
Partial section shown, pier wall and footing reinf similar to primary section

SECTION A-A - PIERS 4, 8, 12 & 16

¾" = 1'-0"

* - 1'-2" at Piers 10-18 (right). See "Pier Details No. 5" sheet

** - 7" at Piers 10-18 (right). See "Pier Details No. 5" sheet

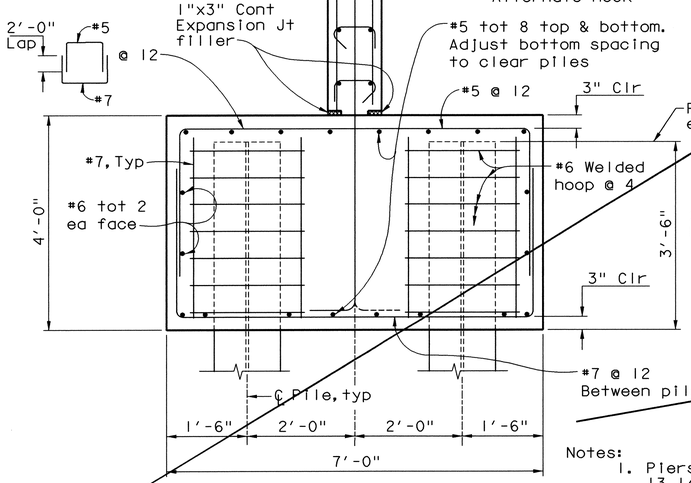


SECTION A-A

¾" = 1'-0"

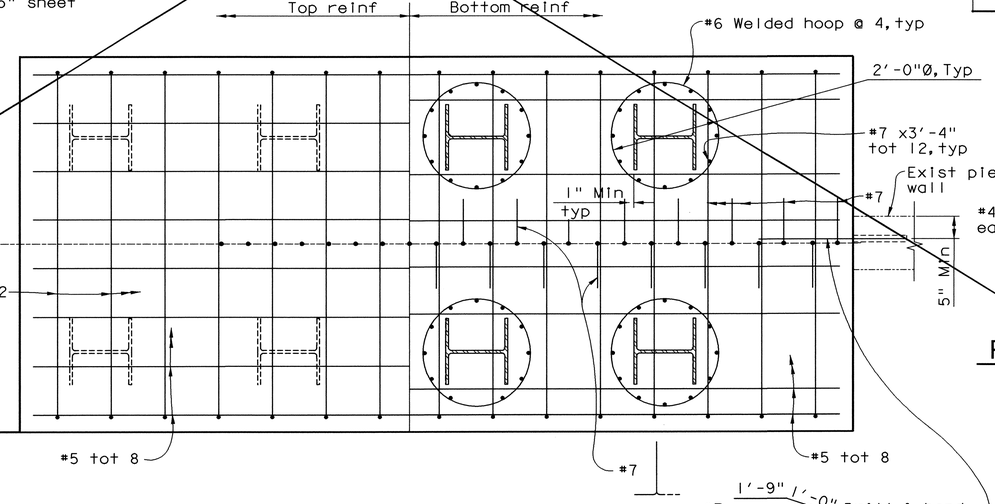


FOOTING REINFORCEMENT PLAN

¾" = 1'-0"

Note:
Contractor shall verify all controlling field dimensions before ordering or fabricating any material

Notes:
1. Piers 2, 3, 5, 6, 7, 9, 10, 11, 13, 14, 15, 17, 18 shown, Piers 4, 8, 12, 16 similar except as noted.
2. See "Section A-A - Piers 4, 8, 12 & 16" for #8 dowel layout.
3. Contractor has to provide temporary support for pier wall until girders are erected and all diaphragms over pier are complete before the wet season.


W. Koo & Associates, Inc.
600 The City Parkway West, Suite 310
Orange CA. 92868
PH: (714) 456-0280
FAX: (714) 456-0295


| MARK | DATE | DESCRIPTION |
|---|---|---|
| | | |

REVISIONS

PREPARED UNDER RESPONSIBLE CHARGE OF:

REGISTERED PROFESSIONAL ENGINEER — SHAFI M. SHARIFIAN — No. CE 49637 — Exp. 9-30-04 — CIVIL — STATE OF CALIFORNIA

8/22/02

DATE

ORANGE COUNTY
PUBLIC FACILITIES AND RESOURCES DEPARTMENT

GLASSELL STREET BRIDGE WIDENING OVER SANTA ANA RIVER

# PIER DETAILS NO. 2

| DESIGNED X. WU | | SHEET |
|---|---|---|
| DRAWN G. BUELOW | CHECKED S. SHARIFIAN | 47 |
| SCALE AS SHOWN | DATE 7/19/02 | DRAWING NO. |

OF 70

Date Plotted: 01/15/03

File Name: i:\010-14\glassell\g_pd2.dgn

Border sheet last modified 09-Nov-1999