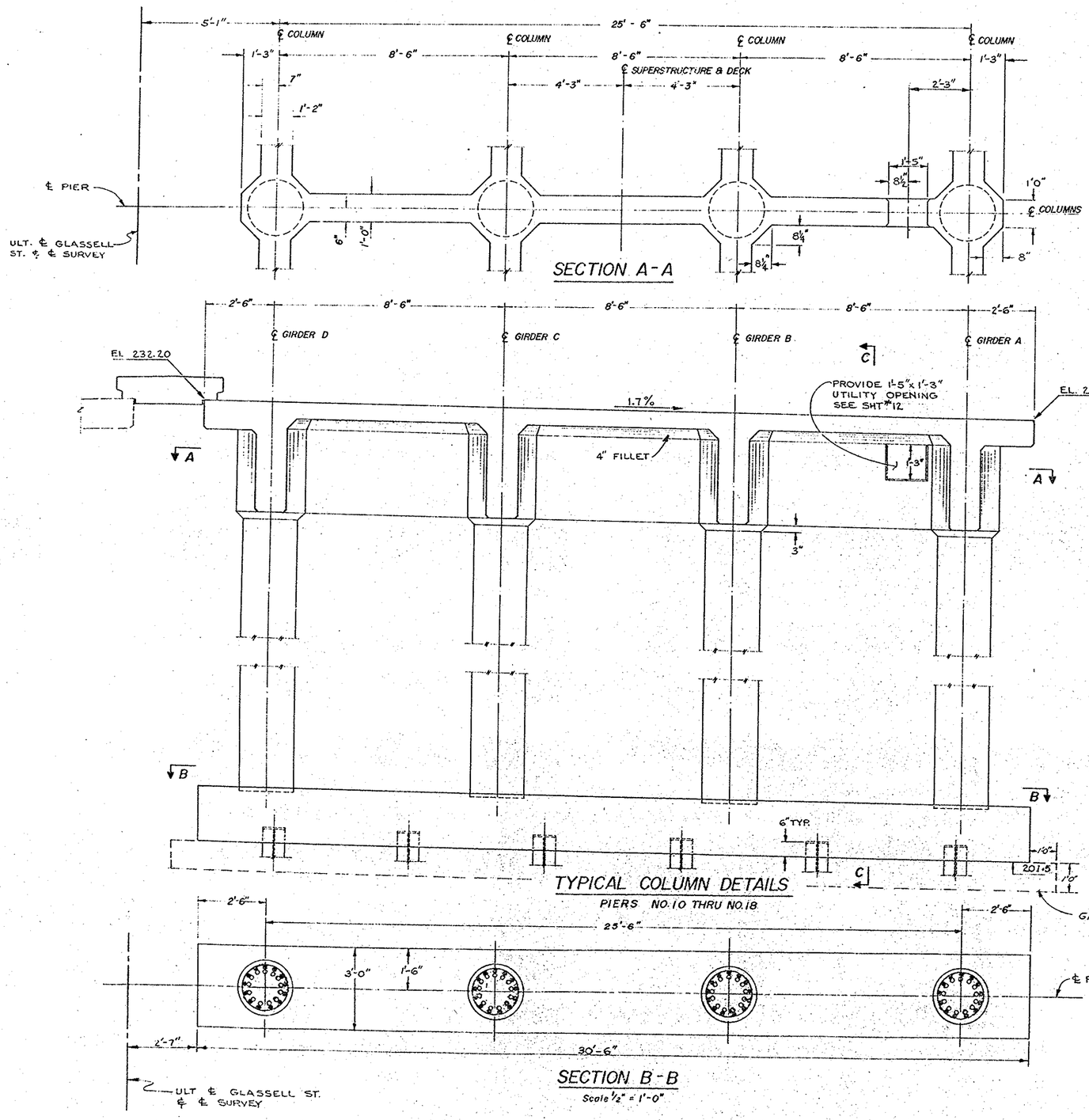

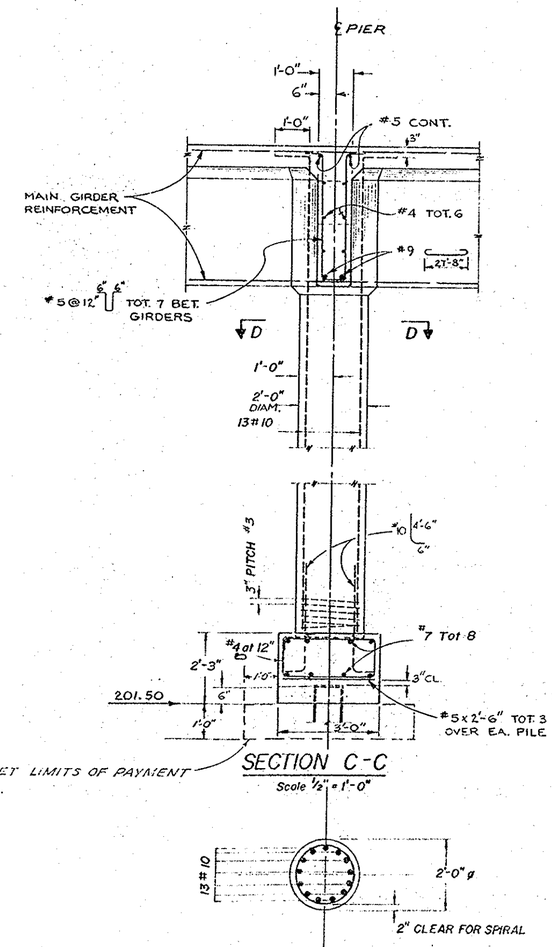

AS BUILT

SEE SHEET NO. 3 FOR H-PILE DETAILS

ORANGE COUNTY ROAD DEPARTMENT

GLASSELL ST BRIDGE
ACROSS
SANTA ANA RIVER

PIER DETAILS #10-#18

½" = 1'-0"

BR. 7 (1034)