EXACT® STRAIGHT EDGE RULE SE-48

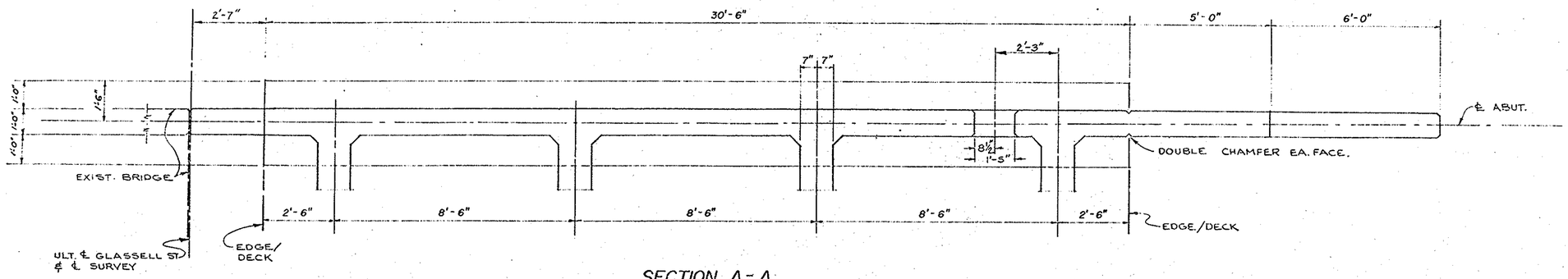


## SECTION A-A

Scale ½" = 1'-0"

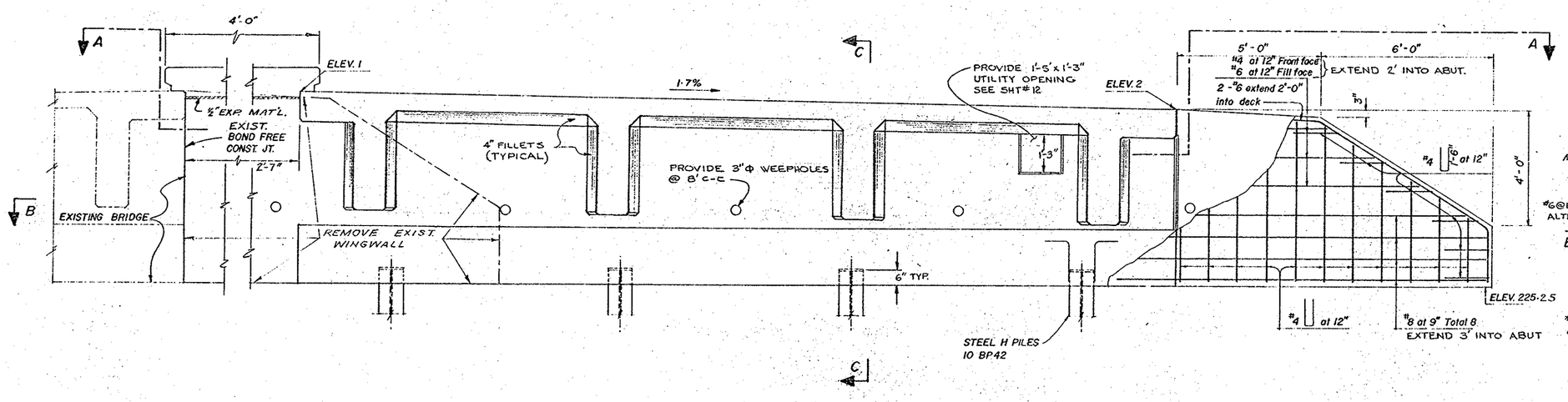


## TYPICAL ABUTMENT DETAILS

Scale ½" = 1'-0"

ABUTMENT 19 AS SHOWN

ABUTMENT 1 OPPOSITE HAND

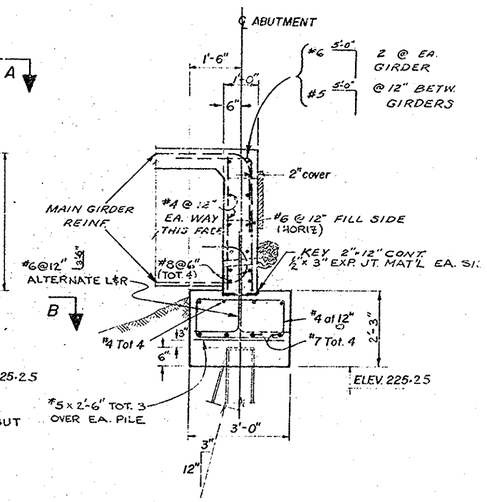


## SECTION C-C

Scale ½" = 1'-0"

BLOCK BACK OF UTILITY OPENING WITH 2" MIN. R.W. LUMBER (FIX SECURELY)

PLACE 1 CU.FT. OF PERVIOUS BACKFILL MAT'L (IN A BURLAP SACK TIED SECURELY) BEHIND EA. WEEPHOLE.

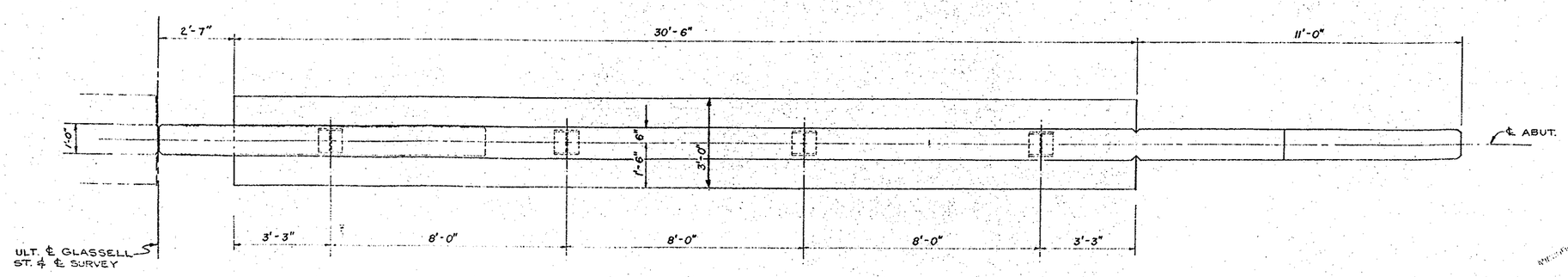


## SECTION B-B

Scale ½" = 1'-0"

SEE SHEET NO. 3 FOR H-PILE DETAILS

AS BUILT

GLASSELL ST BRIDGE
ACROSS
SANTA ANA RIVER

ABUTMENT DETAILS

½" = 1'-0"

DR. 7 (10343)