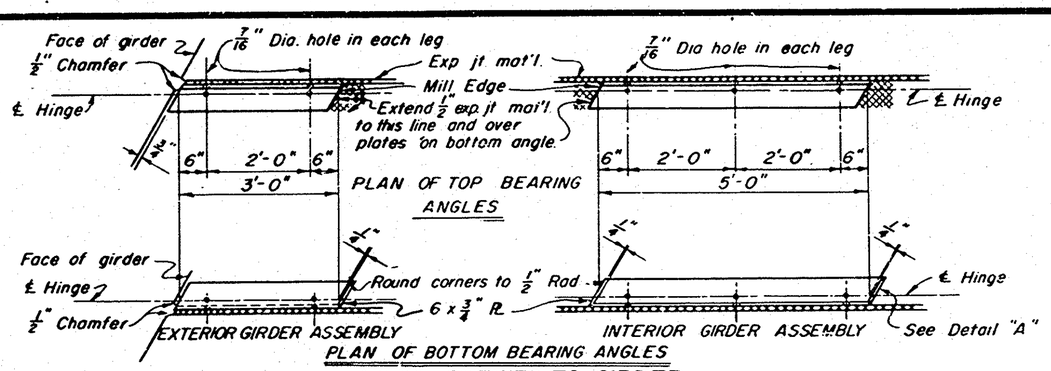

HINGE SKEWED TO GIRDER

Scale: 3/4" = 1'-0"

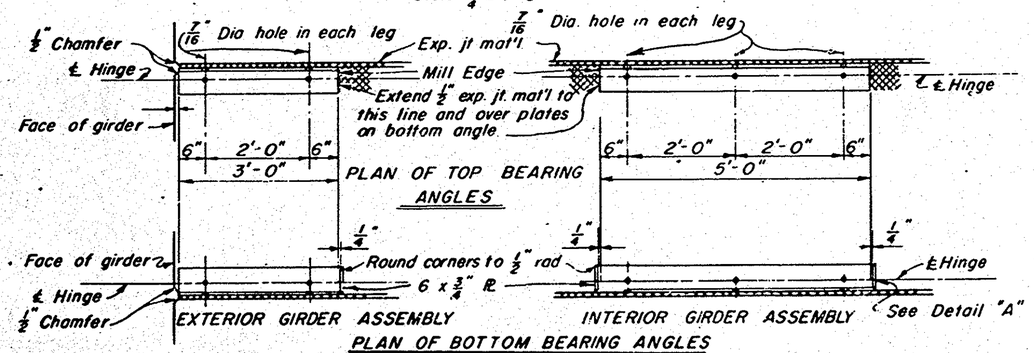

HINGE NORMAL TO GIRDER

Scale: 3/4" = 1'-0"

To provide for free movement of the completed hinge, abutting surfaces of steel and concrete are to be separated with expansion material. Caulk and tape the joints between steel angles and all remaining openings to prevent grout or concrete seepage between abutting surfaces of hinge.

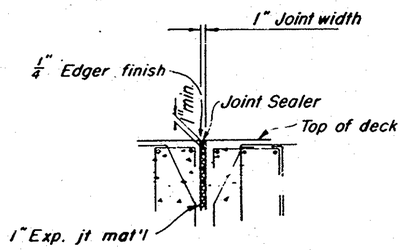

DETAILS

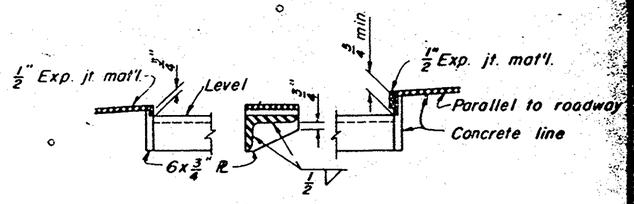

DETAIL "A"

Scale: 1 1/2" = 1'-0

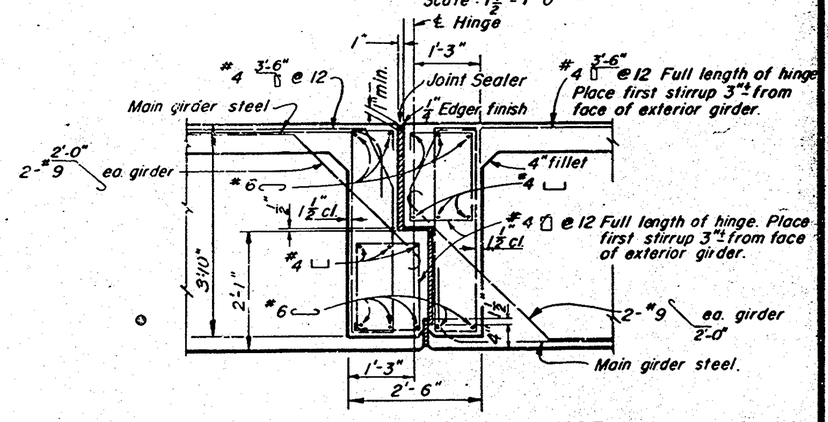

TYPICAL EXPANSION HINGE

Scale: 1 3/4" = 1'-0"

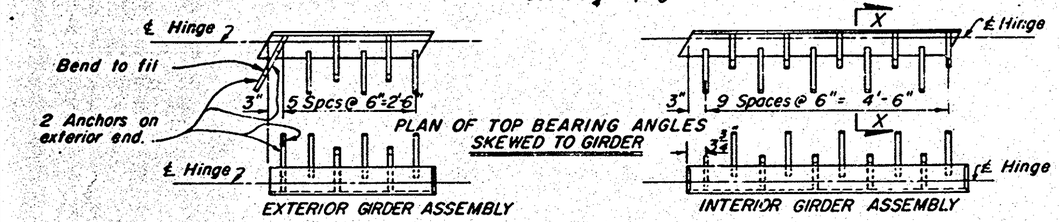

Exterior Assembly Max. shear for 3'-0" long angle = 151k

Interior Assembly Max. shear for 5'-0" long angle = 252k

STRAP ANCHORS

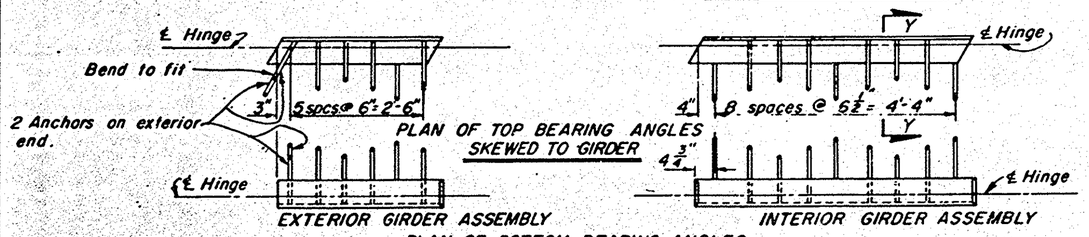

STUD ANCHORS

ANCHOR ALTERNATIVES

Scale: 3/4" = 1'-0"

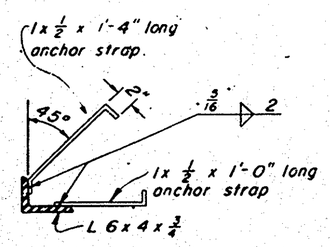

SECTION X-X

Scale: 1 1/2" = 1'-0"

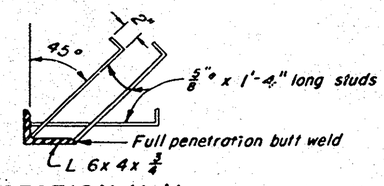

SECTION Y-Y

Scale: 1 1/2" = 1'-0"

Galvanize hinge assembly after fabrication

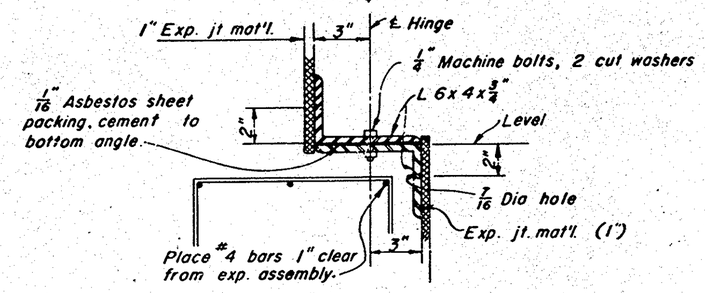

SECTION THRU EXPANSION ASSEMBLY

Scale: 3" = 1'-0"

NOTE:
ALL REQ'D HINGE ASSEMBLIES ARE SKEWED TO GIRDERS.

8 INTERIOR GIRDER ASSEMBLIES REQ'D.
8 EXTERIOR GIRDER ASSEMBLIES REQ'D.

MICROFILMED
DEC 28 1984

ORANGE COUNTY HIGHWAY DEPARTMENT

FAIRVIEW STREET BRIDGE
ACROSS
SANTA ANA RIVER

HINGE DETAILS

SCALE As Noted | SHEET 8 OF 13

SA-21