DIST.	COUNTY	ROUTE	POST MILES—TOTAL PROJECT	SHEET No.	TOTAL SHEETS
07	Ora	57	10.7/12.5	164	243

A. E. Bachu
DESIGN SECTION SUPERVISOR — REGISTERED CIVIL ENGINEER NO. 3958
DATE APPROVED April 16, 1973

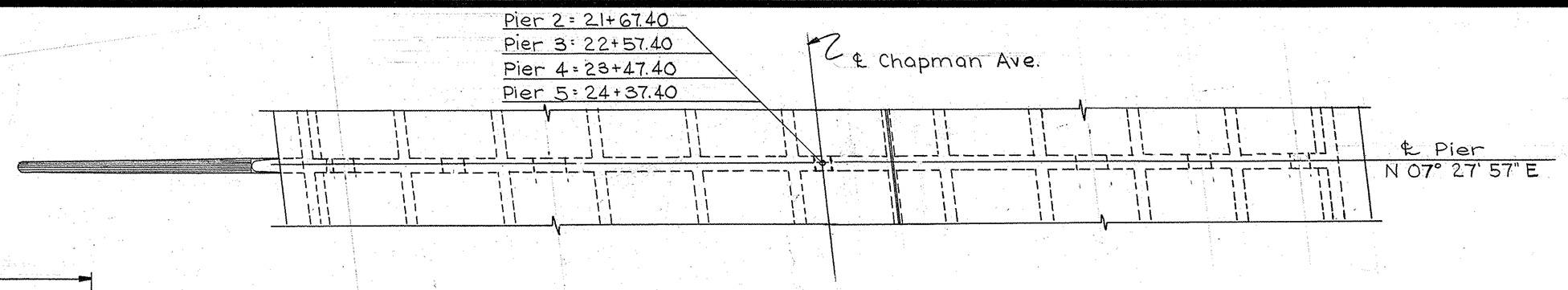

PLAN
Scale: 1/8" = 1'-0"

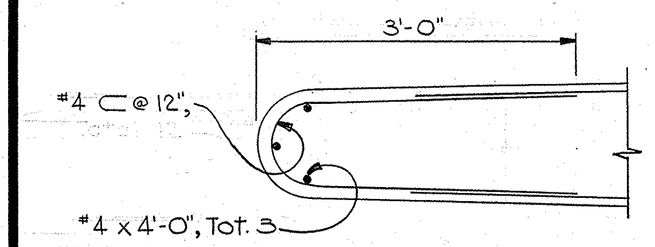

SECTION D-D
No Scale

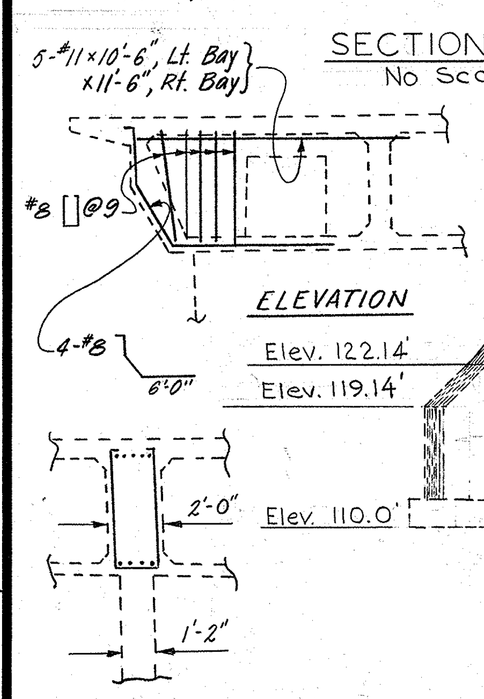

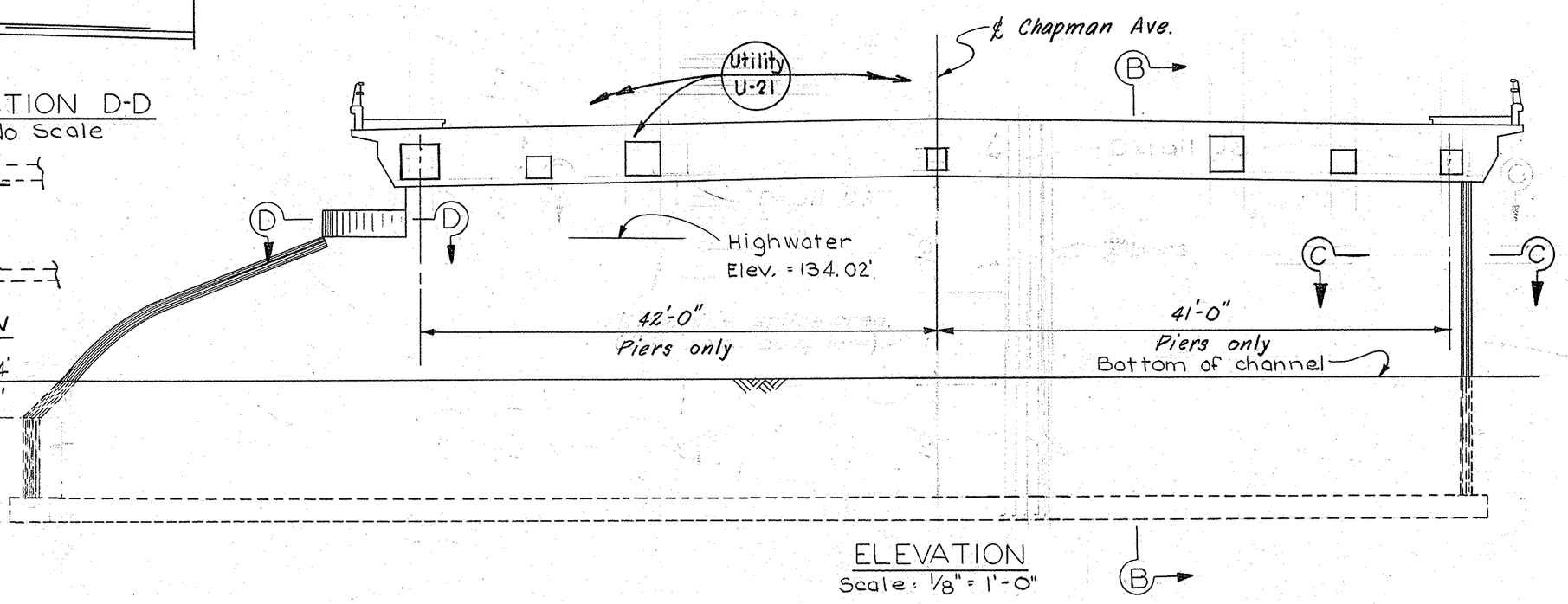

ELEVATION
Scale: 1/8" = 1'-0"

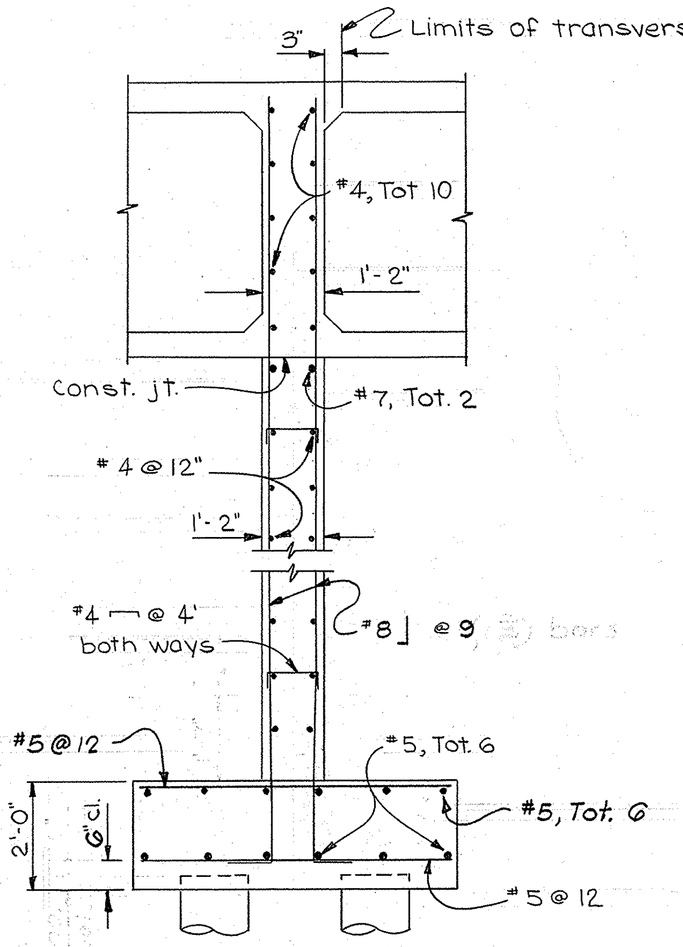

SECTION B-B
Scale: 1/2" = 1'-0"

AS BUILT
CORRECTIONS BY W. HANSEN
CONTRACT NO. 07-032014
DATE 4-13-76

MODIFIED EXTERIOR BAYS AT PIERS PER CCO NO. 51

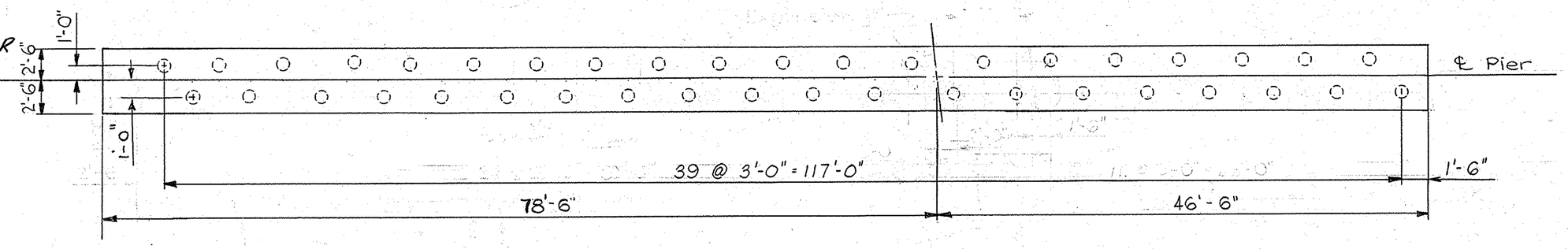

FOOTING PLAN
No Scale

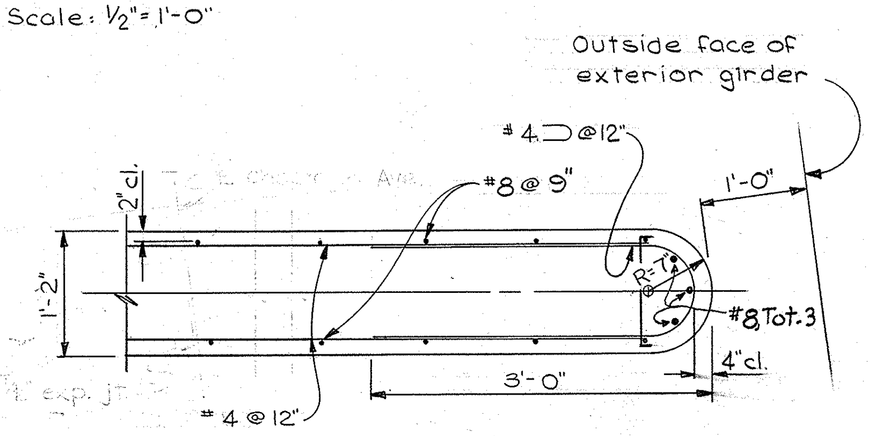

SECTION C-C
Scale: 1" = 1'-0"

TYPICAL PIER EXTENSION
Scale: None

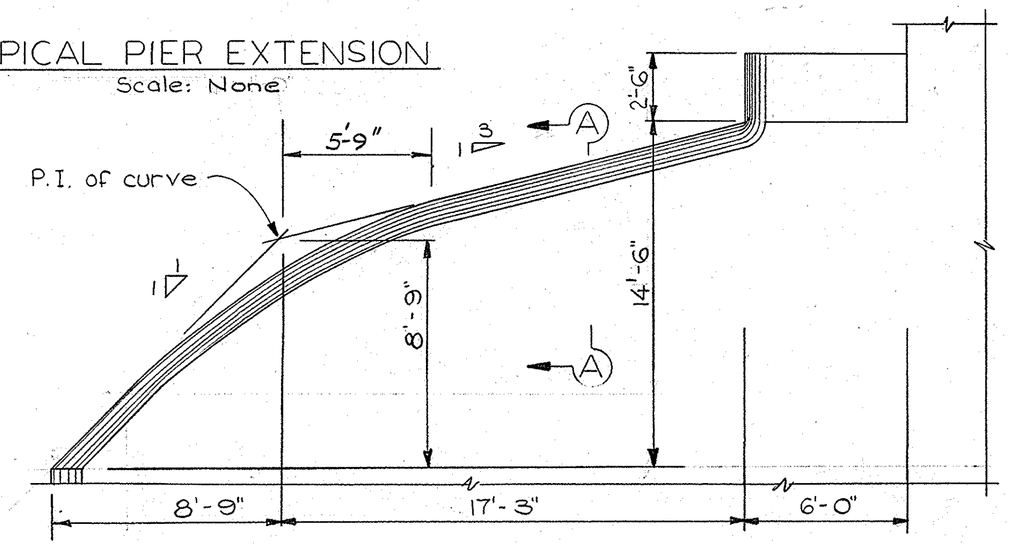

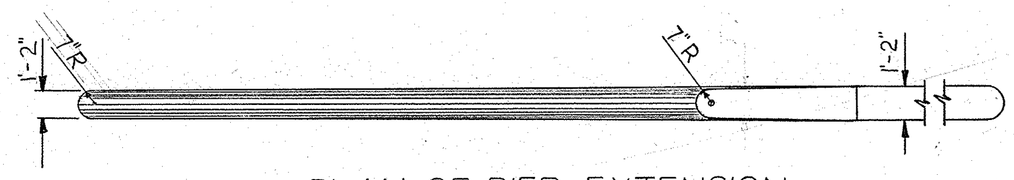

PLAN OF PIER EXTENSION
Scale: 1/4" = 1'-0"

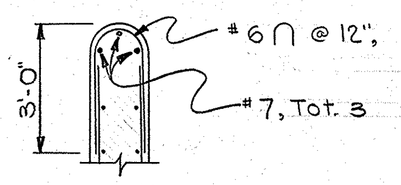

SECTION A-A
No Scale

MICROFILMED
JUL 2 2 1976

164

BRIDGE DEPARTMENT DESIGN SECTION 9		
Project Engineer	P. Nelson	
DESIGN	By	Albert Bachu
	Checked	R.C. Ollenburg
DETAILS	By	DON SCHROEDER 11/69
	Checked	R.C. Ollenburg
QUANTITIES	By	P. Nelson
	Checked	Ollenburg

STATE OF CALIFORNIA
DEPARTMENT OF TRANSPORTATION

SANTA ANA RIVER BRIDGE
REMOVE & REPLACE
PIERS

BRIDGE NO.	POST MILE	DRAWING NO.	SHEET	OF
55C-54	11.1	55C54-	5	12

WO
CU

Disregard prints bearing earlier revision dates

(REVISION DATES) (PRELIMINARY STAGE ONLY)
7/16/68 4/8/74 5/21 7/17/72 8/3/72 3/78 R.O.

EST. 5676. 58359-900 1-69 CBP