DIST.	COUNTY	ROUTE	POST MILES—TOTAL PROJECT	SHEET NO.	TOTAL SHEETS
07	Ora	57	10.7/12.5	163	243

A.E. Barber
DESIGN SECTION SUPERVISOR — REGISTERED CIVIL ENGINEER NO. 9858
DATE APPROVED April 16, 1973

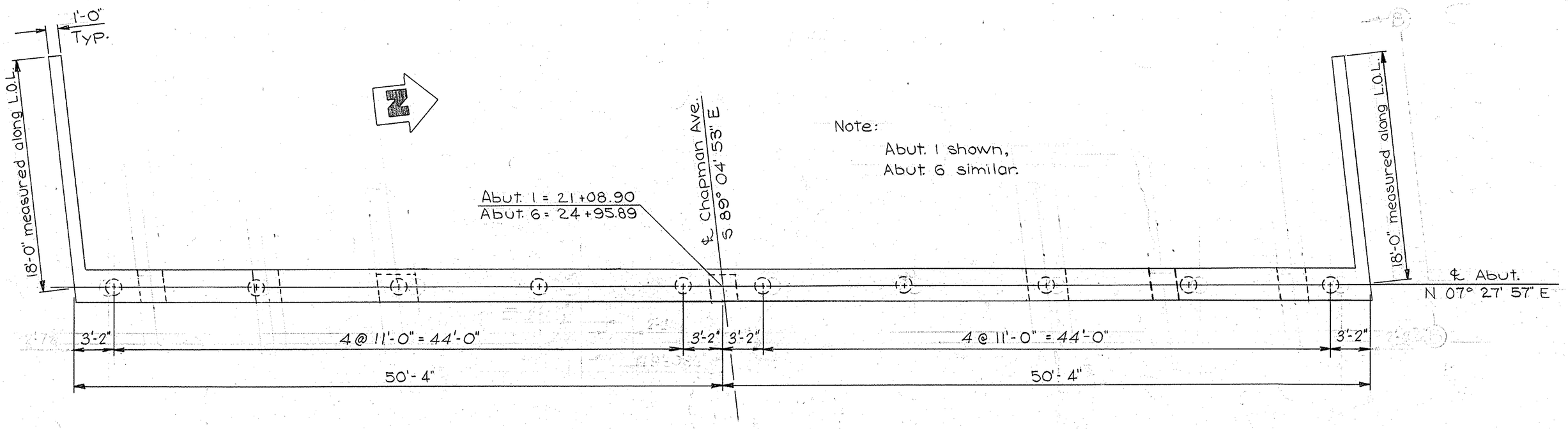

PLAN
Scale: 3/16" = 1'-0"

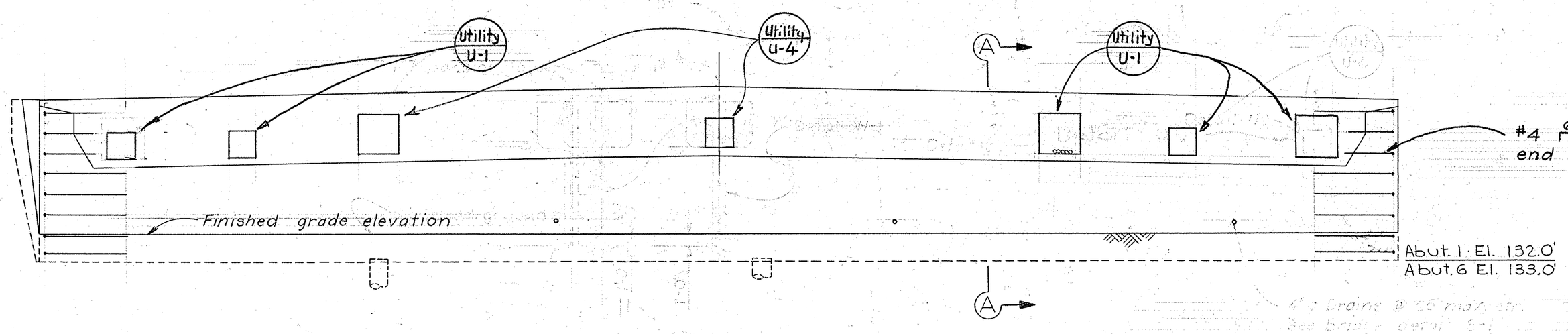

ELEVATION
Scale: 3/16" = 1'-0"

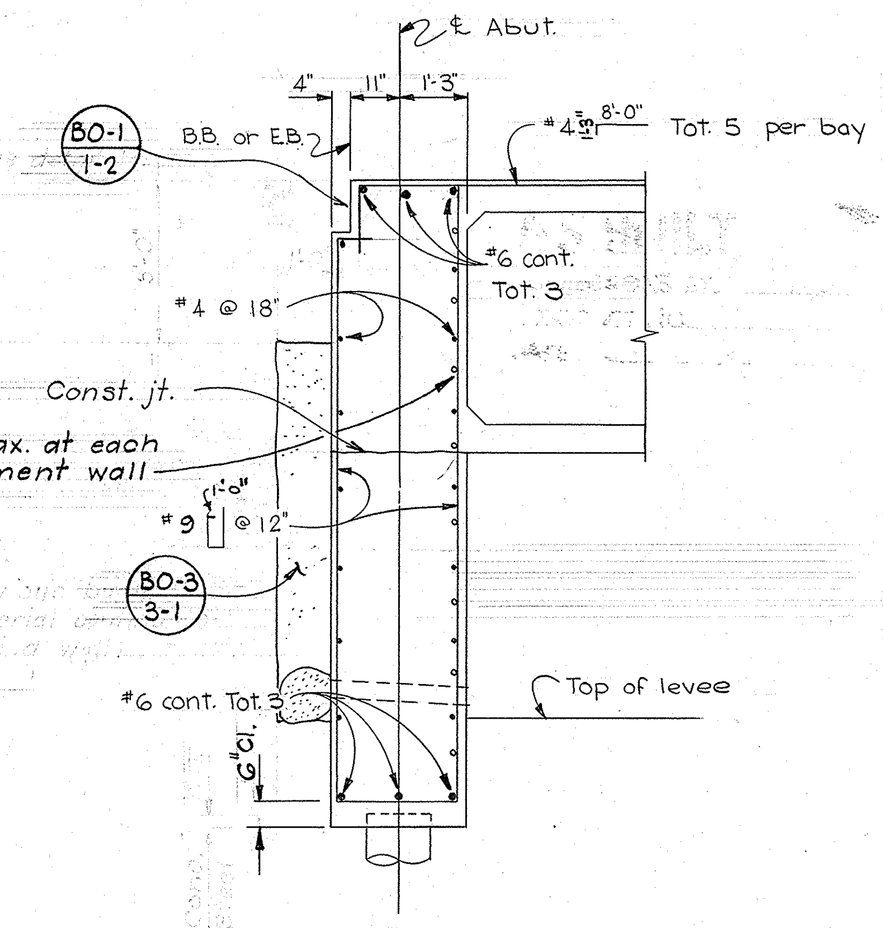

SECTION A-A
Scale: 1/2" = 1'-0"

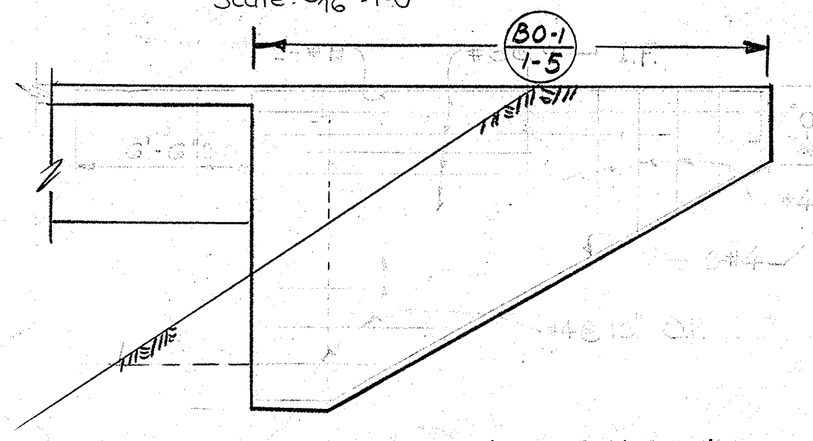

WINGWALL ELEVATION
No Scale

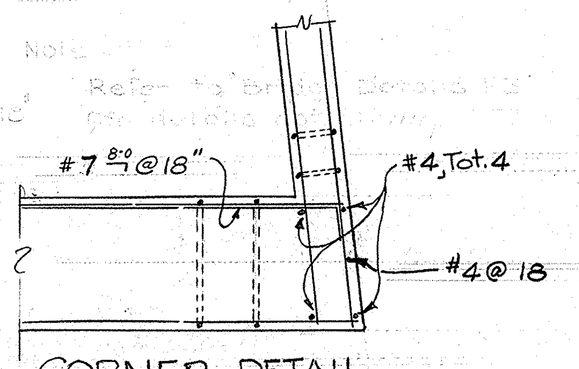

CORNER DETAIL
Scale: 1/2" = 1'-0"

AS BUILT 5/28/76
NO CORRECTIONS BY W. HANSEN
CONTRACT NO. 07-032012
DATE 4-13-76

BRIDGE DEPARTMENT
DESIGN SECTION 9
Project Engineer

DESIGN	By Albert Burke	
	Checked B.C. Blanchard	
DETAILS	By Don Schroeder 11/69	
	Checked B.C. Blanchard	
QUANTITIES	By P. Nelson	
	Checked O'Leary	

STATE OF CALIFORNIA
DEPARTMENT OF TRANSPORTATION

SANTA ANA RIVER BRIDGE
REMOVE & REPLACE

ABUTMENTS

BRIDGE NO.	POST MILE	DRAWING NO.	SHEET	OF
55C-54	11.1	55C54-	4	12

REVISION DATES (PRELIMINARY STAGE ONLY): 11/17/67 6/1/68 1/4/70 12/30/70 7/8/71 3/1/80

Disregard prints bearing earlier revision dates

WO
CU

MICROFILMED
JUL 22 1976

163

EST. 3974. 3888-900 1-69 GBP