DIST.	COUNTY	ROUTE	POST MILES—TOTAL PROJECT	SHEET NO.	TOTAL SHEETS
07	Ora	57	10.7/12.5	160	243

BRIDGE ENGINEER — REGISTERED CIVIL ENGINEER NUMBER 5585

ASSISTANT STATE HIGHWAY ENGINEER — REGISTERED CIVIL ENGINEER NUMBER 5390

DATE APPROVED April 16, 1973

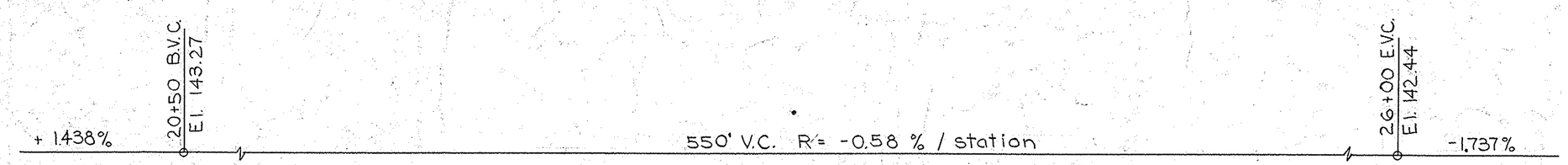

PROFILE GRADE

PILE DATA
Type of pile: Precast prestressed concrete piles.
Hammer data: Vulcan 80C (E=24,450 ft-lbs) & Kobe K35 (variable E)
Pile diameter: Tip = 12"x12", Butt = 12"x12"
Pile design load: 70T
For the structure:
No. of piles = 180 ea.
Estimated length of piling = 5,535 l.f.
Actual length of piling = 4,758.8 l.f.

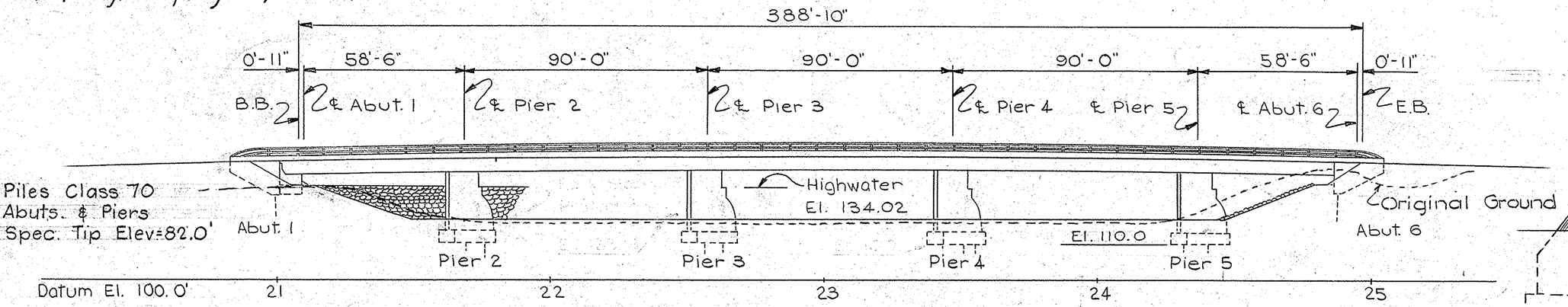

	Abut. 1, 10 ea.	Pier 2, 40 ea.	Pier 3, 40 ea.	Pier 4, 40 ea.	Pier 5, 40 ea.	Abut. 6, 10 ea.
Number of piles in ftg. of:	Abut. 1, 10 ea.	Pier 2, 40 ea.	Pier 3, 40 ea.	Pier 4, 40 ea.	Pier 5, 40 ea.	Abut. 6, 10 ea.
Avg. actual length of pile:	45.4 ft.	23.7 ft.	23.0 ft.	23.5 ft.	25.3 ft.	46.6 ft.
Avg. pile tip elev.:	86.9	86.6	87.3	86.6	85.0	86.7
Specified pile tip elev.:	82.0	82.0	82.0	82.0	82.0	82.0

ELEVATION
Scale: 1" = 30'-0"

Curve Data
R = 1766
Δ = 19° 16' 56"
T = 300.00'
L = 594.33'

① Paint "Br. No. 55C-54 & Year" Constructed
② Paint "SANTA ANA RIVER BRIDGE"

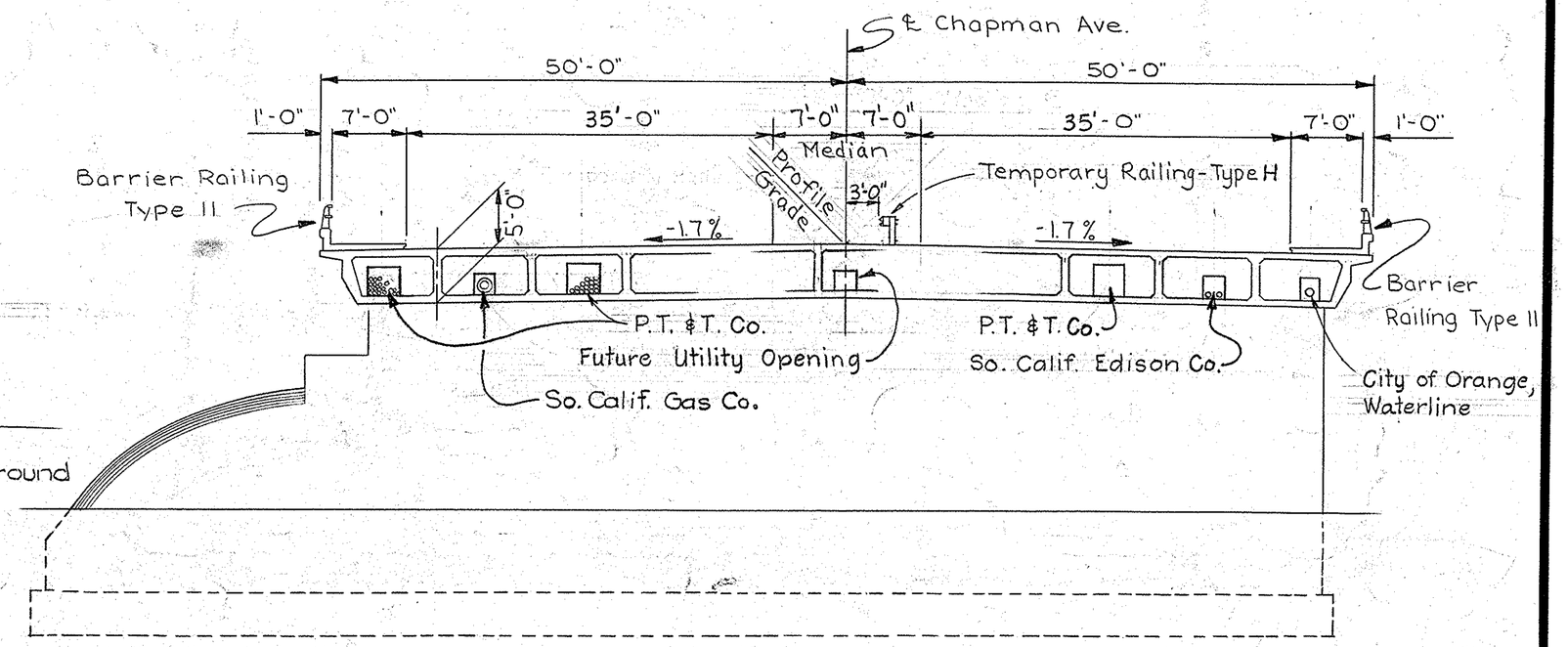

TYPICAL SECTION
Scale: 1" = 10'-0"

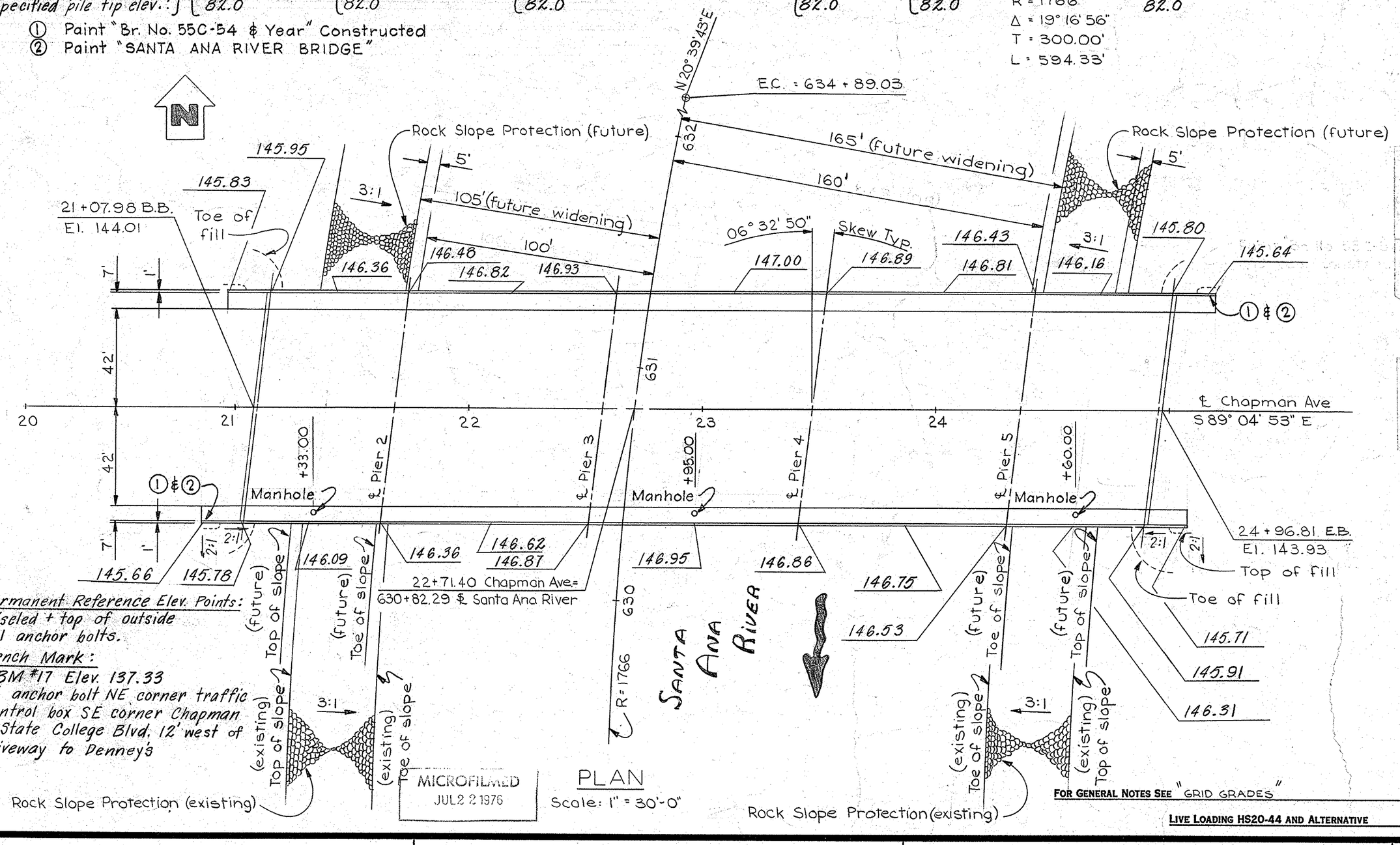

PLAN
Scale: 1" = 30'-0"

MICROFILMED JUL 2 2 1976

FOR GENERAL NOTES SEE "GRID GRADES"

LIVE LOADING HS20-44 AND ALTERNATIVE

Permanent Reference Elev. Points:
chiseled + top of outside rail anchor bolts.

Bench Mark:
CBM #17 Elev. 137.33
Fd anchor bolt NE corner traffic control box SE corner Chapman & State College Blvd. 12' west of driveway to Denney's

APPROXIMATE QUANTITIES

~~TEMPORARY CABLE ANCHOR ASSEMBLY~~	~~2~~	~~EA~~
~~TEMPORARY RAILING (TYPE H)~~	~~500~~	~~LF~~
BRIDGE REMOVAL	LUMP	SUM
TEMPORARY SUPPORT STRUCTURE	LUMP	SUM
FURNISH PILING (CLASS 70)	5,535	LF
DRIVE PILE (CLASS 70)	180	EA
METAL RAILING (TYPE 11)	846	LF

FINAL PAY QUANTITIES

STRUCTURE EXCAVATION (BRIDGE)	1,890	CY
STRUCTURE BACKFILL (BRIDGE)	755	CY
PERVIOUS BACKFILL MATERIAL	40	CY
STRUCTURE CONCRETE, BRIDGE FOOTING	185	CY
STRUCTURE CONCRETE, BRIDGE	3,125	CY
BAR REINFORCING STEEL (BRIDGE)	917,000	LB
MISCELLANEOUS METAL (BRIDGE)	390	LB

INDEX TO PLANS

SHEET NO.	TITLE
1	GENERAL PLAN
2	GRID GRADES
3	FOUNDATION PLAN
4	ABUTMENTS
5	PIERS
6	TYPICAL SECTION
7	GIRDER LAYOUT
8	GIRDER REINFORCEMENT
9	UTILITY OPENING - BOX GIRDER
10	UTILITY SUPPORT PILES
11	LOG OF TEST BORINGS No. 1
12	LOG OF TEST BORINGS No. 2

STANDARD PLANS DATED JANUARY, 1973

A62-BB	EXCAVATION AND BACKFILL BRIDGE - LIMITS OF PAYMENT
BO-1	BRIDGE DETAILS (GENERAL & ABUTMENT)
BO-3	BRIDGE DETAILS (WALLS)
BO-5	BRIDGE DETAILS (DECKS)
B2-5	PILE DETAILS - CLASS 70
B7-1	BOX GIRDER DETAILS
B7-11	UTILITIES DETAILS
B11-30	TEMPORARY RAILINGS
B11-41	BARRIER RAILING TYPE 11
B11-43	METAL RAILING DETAILS - TYPES 9 & 11

AS BUILT
CORRECTIONS BY W. HANSEN
CONTRACT NO. 07-032014
DATE 4-12-76

Standard Plan Sheet No.
Detail No.

CHAPMAN AVE. BRIDGE
(SA-17)-55C-0054
OVER SANTA ANA RIVER.
1969

STATE OF CALIFORNIA
DEPARTMENT OF TRANSPORTATION

SANTA ANA RIVER BRIDGE REMOVE & REPLACE

LOCATED IN THE CITY OF ORANGE APPROX. 0.23 MI. N. OF SANTA ANA FREEWAY IN ORANGE COUNTY

GENERAL PLAN

BRIDGE NO.	POST MILE	DRAWING NO.	SHEET	OF
55C-54	11.1	55C54-	1	12

REVISION DATES (PRELIMINARY STAGE ONLY)

Disregard prints bearing earlier revision dates

WO 032011
CU 07208