DIST	COUNTY	ROUTE	POST MILES TOTAL PROJECT	SHEET NO.	TOTAL SHEETS
12	ORA				

Wen Kyu
REGISTERED CIVIL ENGINEER

PLANS APPROVAL DATE

REGISTERED PROFESSIONAL ENGINEER WEN K. YU No. C-051952 Exp. 06/30/98 CIVIL STATE OF CALIFORNIA

LIM & NASCIMENTO ENGINEERING
1971 East Fourth Street, Suite 200
Santa Ana, California 92705

Brown & Root, INC.
1000 South Fremont Avenue
Alhambra, California 91803-1300

AS BUILT

CORRECTIONS BY G. ZAUN / RWH

CONTRACT NO. 59Y021

DATE 2-8-02 / 10-24-02

NO AS BUILT CHANGES

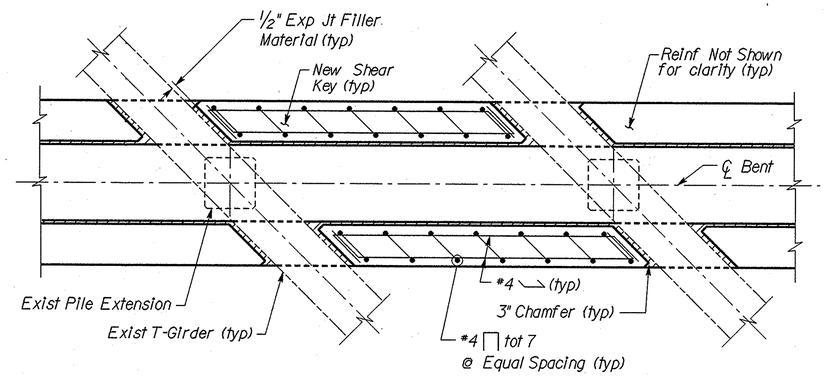

SHEAR KEY DETAIL
Scale: 1/2" = 1'-0"

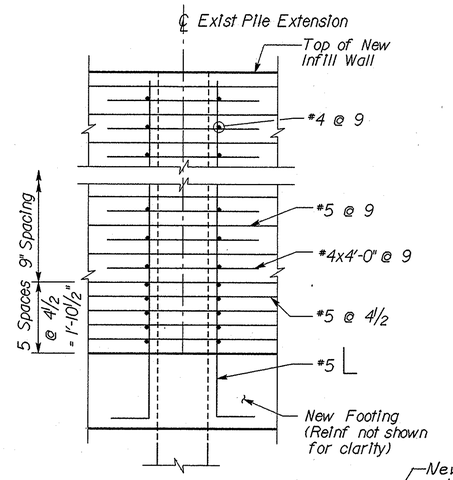

SECTION D-D
Scale: 1/2" = 1'-0"

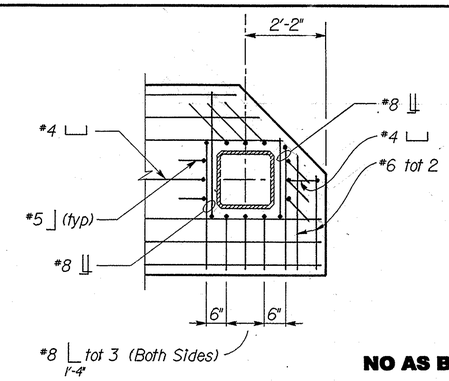

DETAIL I (Bottom Mat - South end)
Scale: 1/2" = 1'-0"

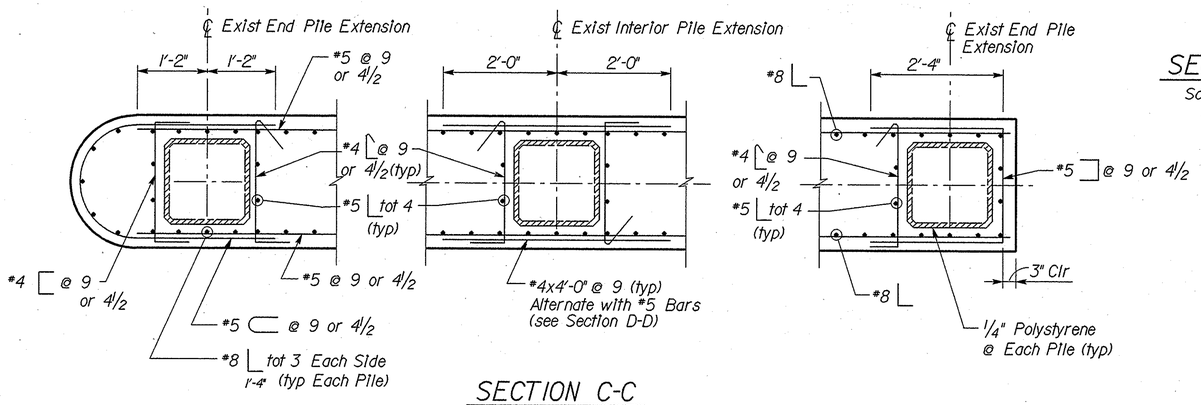

SECTION C-C
Scale: 3/4" = 1'-0"

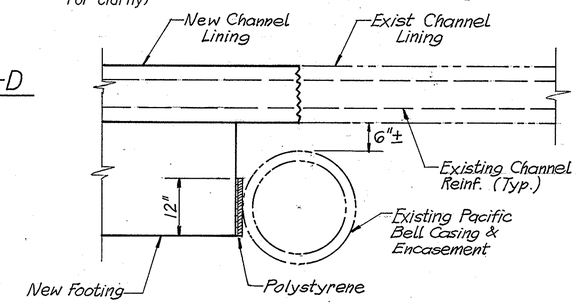

SECTION E-E
Scale: 3/4" = 1'-0"

GENERAL NOTES
LOAD FACTOR DESIGN

DESIGN: BRIDGE DESIGN SPECIFICATIONS (1983 AASHTO with Interims and Revisions by Caltrans)

SEISMIC LOADING: ATC-32 ARS Curve
Peak Bedrock acceleration = 0.7 g
Soil Profile = Type D
Fault Moment Magnitude = 7.5
Spectral Acceleration Increased by 20%

REINFORCED CONCRETE: Existing Concrete:
(Assumed for Retrofit Evaluation)
fy = 36,000 psi
f'c = 3,750 psi
n = 8

New Concrete (unless noted otherwise)
fy = 60,000 psi
f'c = 3,250 psi
n = 9

FOOTING PRESSURE:	BENT 2	ALLOWABLE	ULTIMATE
		1.5 ksf	4.5 ksf

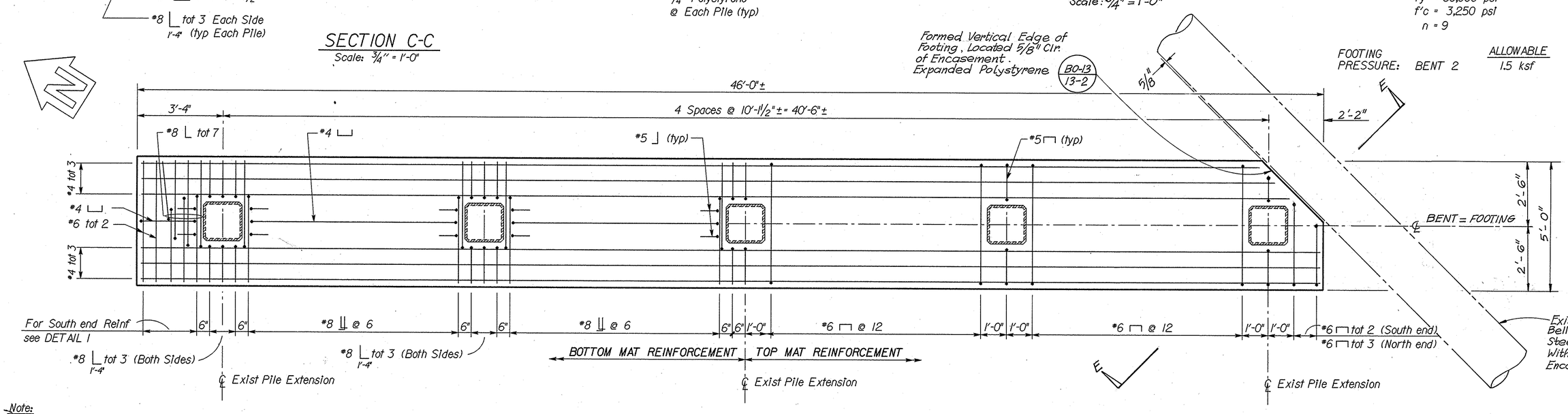

FOOTING REINFORCEMENT
Scale: 1/2" = 1'-0"

Note:
The Contractor shall verify all controlling field dimensions before ordering or fabricating any material.

SHAWN SUN
DESIGN OVERSIGHT
10/2/97
SIGNOFF DATE

	BY	CHECKED
DESIGN	W. YU	G. CHU
DETAILS	E. MONTANO	G. CHU
QUANTITIES	W. YU	A. TRUONG

PREPARED FOR THE COUNTY OF ORANGE

TIM McGRADY
PROJECT ENGINEER

BRIDGE NO. 55C-0122
POST MILE

EARTHQUAKE RETROFIT
BREA CANYON BRIDGE NO. 2
BENT 2 RETROFIT DETAILS NO. 2

15BE2122.DGN-10 09-20-97 RF=55CPLN.BDR.BDR

ORIGINAL SCALE IN INCHES FOR REDUCED PLANS 0 1 2 3

CU 12 152
EA L02105

DISREGARD PRINTS BEARING EARLIER REVISION DATES

REVISION DATES (PRELIMINARY STAGE ONLY)

SHEET 7 OF 8

20-SEP-1997 11:58

/usr2/avoe/cm0015/15be2122.