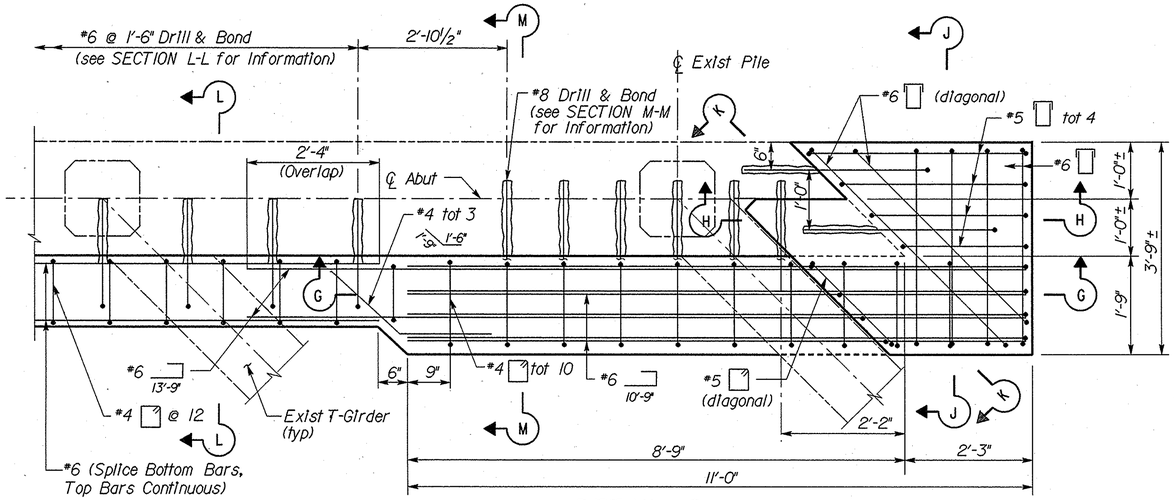

DETAIL 2
Scale: ¾" = 1'-0"

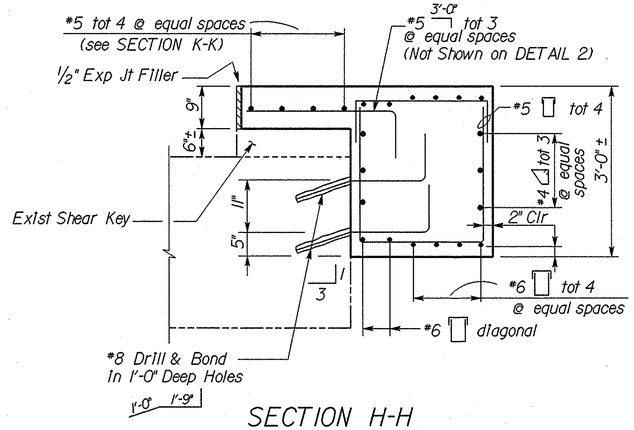

SECTION H-H
Scale: ¾" = 1'-0"

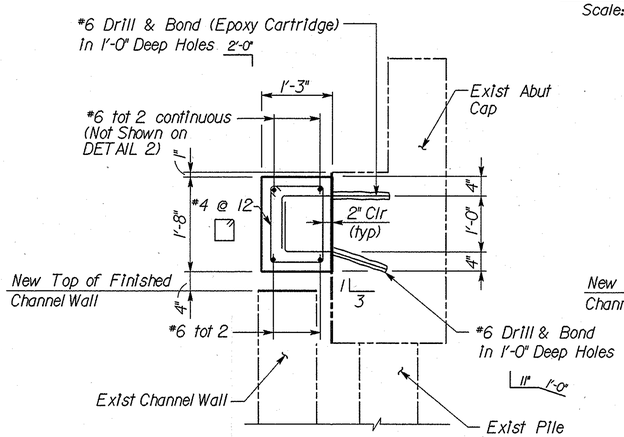

SECTION L-L
Scale: ¾" = 1'-0"

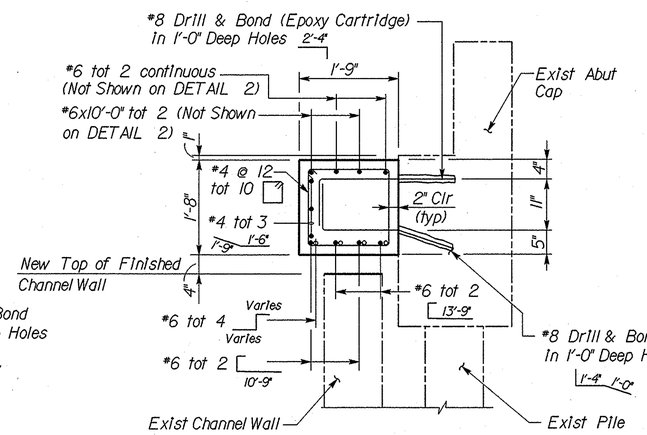

SECTION M-M
Scale: ¾" = 1'-0"

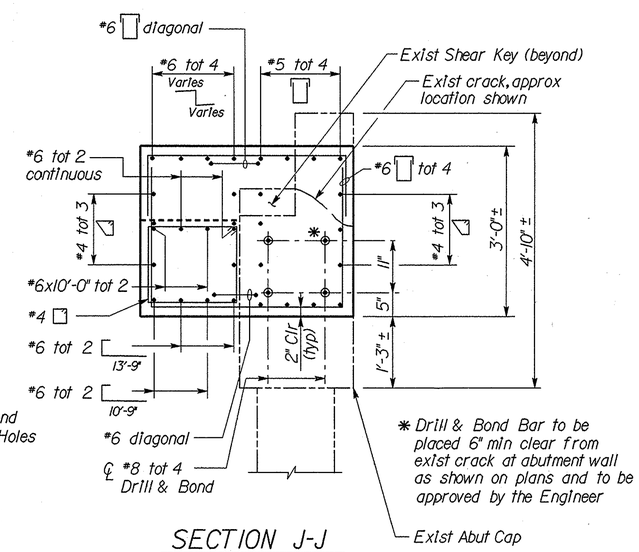

SECTION J-J
Scale: ¾" = 1'-0"

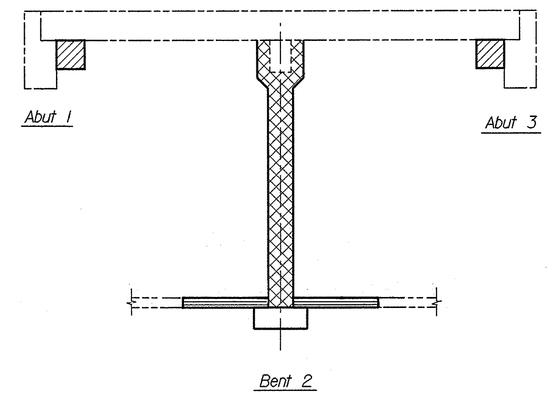

CONCRETE STRENGTH AND TYPE LIMITS

Not to Scale

- Structural Concrete, Bridge
- Structural Concrete, Bridge Footing
- Structural Concrete, Bridge (4000 psi)
- Concrete (Channel Lining)
- Denotes Existing Structure

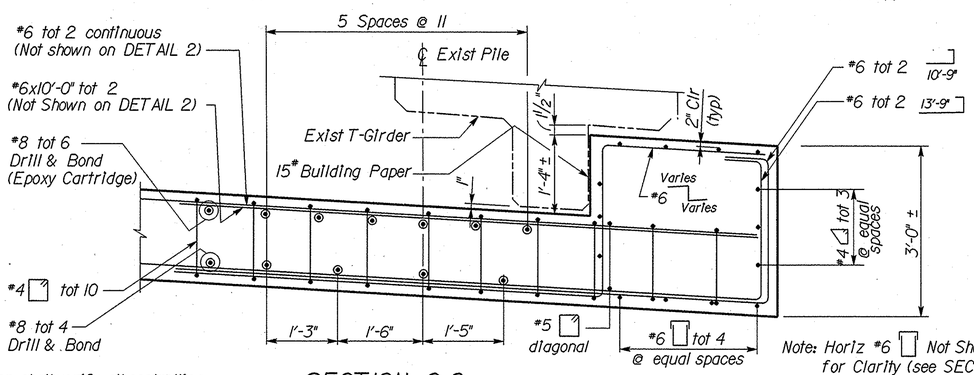

Note: Horiz #6 Not Shown for Clarity (see SECTION H-H for Information)

Note:
The Contractor shall verify all controlling field dimensions before ordering or fabricating any material.

SECTION G-G
Scale: ¾" = 1'-0"

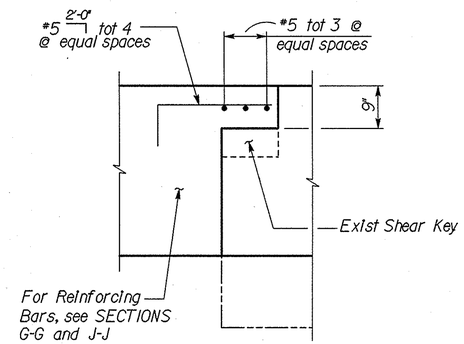

SECTION K-K
Scale: ¾" = 1'-0"

NOTE:

Roughen all existing concrete surfaces in contact with new concrete.

AS BUILT

CORRECTIONS BY G. ZAUN / RWH
CONTRACT NO. 59Y021
DATE 2-8-02 / 10-24-02

NO AS BUILT CHANGES

DIST	COUNTY	ROUTE	POST MILES TOTAL PROJECT	SHEET NO.	TOTAL SHEETS
12	ORA				

Wen K. Yu
REGISTERED CIVIL ENGINEER

PLANS APPROVAL DATE

REGISTERED PROFESSIONAL ENGINEER WEN K. YU No. C-051952 Exp. 06/30/98 CIVIL STATE OF CALIFORNIA

LIM & NASCIMENTO ENGINEERING
1971 East Fourth Street, Suite 200
Santa Ana, California 92705

Brown & Root, INC.
1000 South Fremont Avenue
Alhambra, California 91803-1300

EARTHQUAKE RETROFIT
BREA CANYON BRIDGE NO. 2
ABUTMENT RETROFIT DETAILS NO. 3

BRIDGE NO. 55C-0122
POST MILE

SHAWN SUN
DESIGN OVERSIGHT
10/2/97
SIGNOFF DATE

	BY	CHECKED
DESIGN	W. YU	G. CHU
DETAILS	E. MONTANO	G. CHU
QUANTITIES	W. YU	A. TRUONG

PREPARED FOR THE COUNTY OF ORANGE

TIM McGRADY
PROJECT ENGINEER

CU 12 152
EA L02105

15AB3122.DGN-11 09-20-97 RF=55CPLN.BDR.BDR

ORIGINAL SCALE IN INCHES FOR REDUCED PLANS 0 1 2 3

DISREGARD PRINTS BEARING EARLIER REVISION DATES

REVISION DATES (PRELIMINARY STAGE ONLY)

SHEET 5 OF 8

20-SEP-1997 11:55

/usr2/avoe/cm0015/15ab3122.