EXACT® EXACT LEVEL & TOOL MFG. CO. INC. PLAINFIELD, N.J., U.S.A. STRAIGHT EDGE RULE SE-48

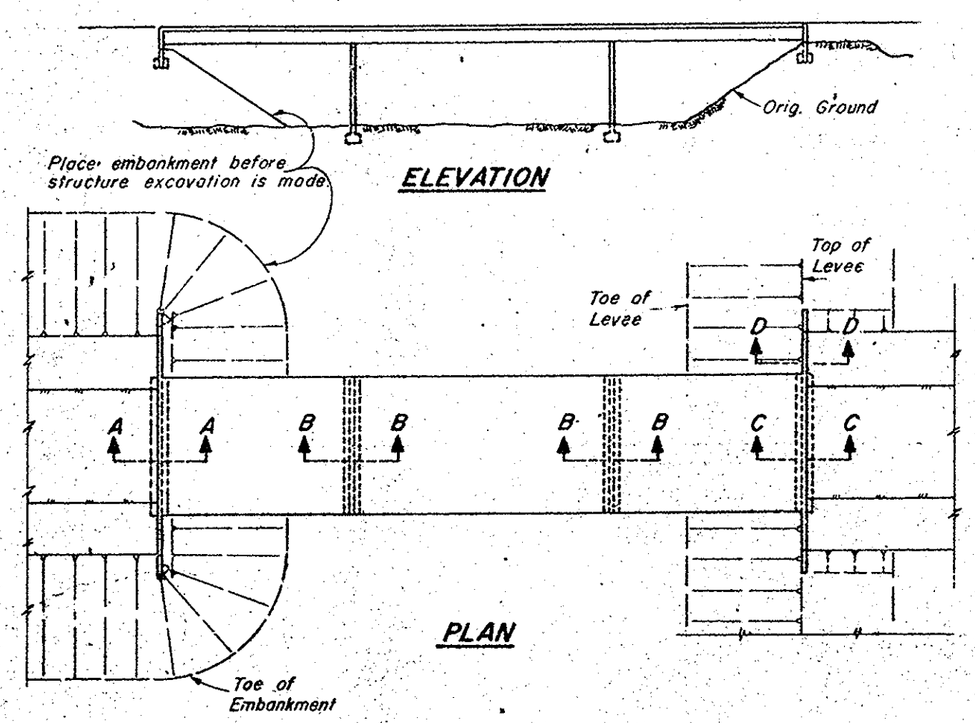

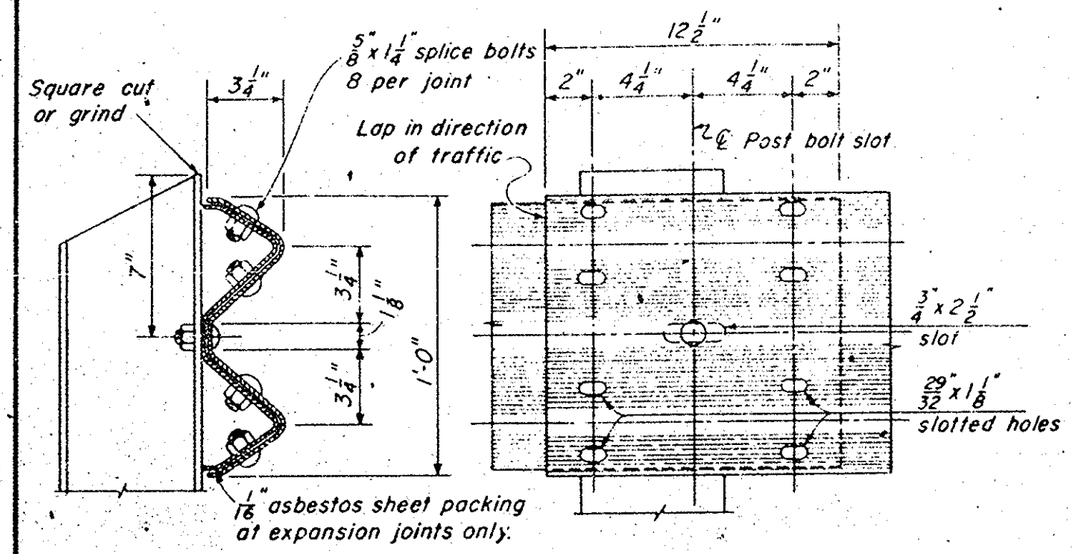

CROSS SECTION ELEVATION

RAIL SPLICE

Scale: 3"=1'-0"

Notes:

At rail splice nearest expansion joint in bridge deck, slot holes in movable section of rail to allow same amount of movement as is provided in bridge deck. Place 1/16" asbestos sheet packing between rail elements. Adjust bolts to provide sliding fit and set threads.

Use 3'-6" posts whenever possible. All anchor rods to have hex. nuts. Provide lock washers for top anchor rods. Weld 2 5/8" x 4" x 1/4" plates on WF posts when using 1 1/4" anchor rods. Contractor to provide metal shims to align posts. Space posts to clear expansion joints by 1'-0" min. to ℄ post. Posts and anchors to be galvanized after fabrication. Railings on retaining walls to be placed after walls are backfilled. Bend rods if necessary to maintain minimum clearance on superelevated slabs.

6H22.5 posts may be substituted for 6WF15.5 posts at Contractor's option.

2 5/8" x 4" x 1/4" plates shown on 6WF15.5 posts not required on 6H22.5 posts.

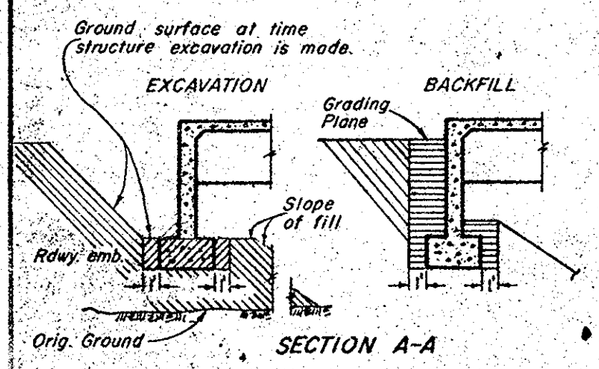

SECTION A-A

ABUTMENT ON NEW FILL

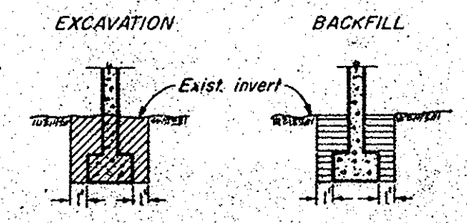

SECTION B-B

PIERS

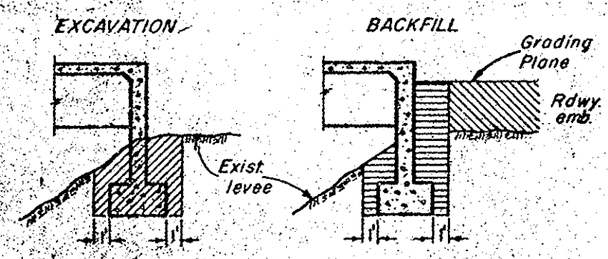

SECTION C-C

ABUTMENT ON EXISTING LEVEE

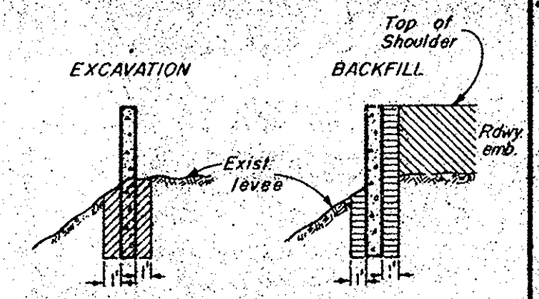

SECTION D-D

WINGWALLS

LEGEND

STRUCTURE EXCAVATION

STRUCTURE BACKFILL

ROADWAY EMBANKMENT

STRUCTURE EXCAVATION & BACKFILL DETAILS

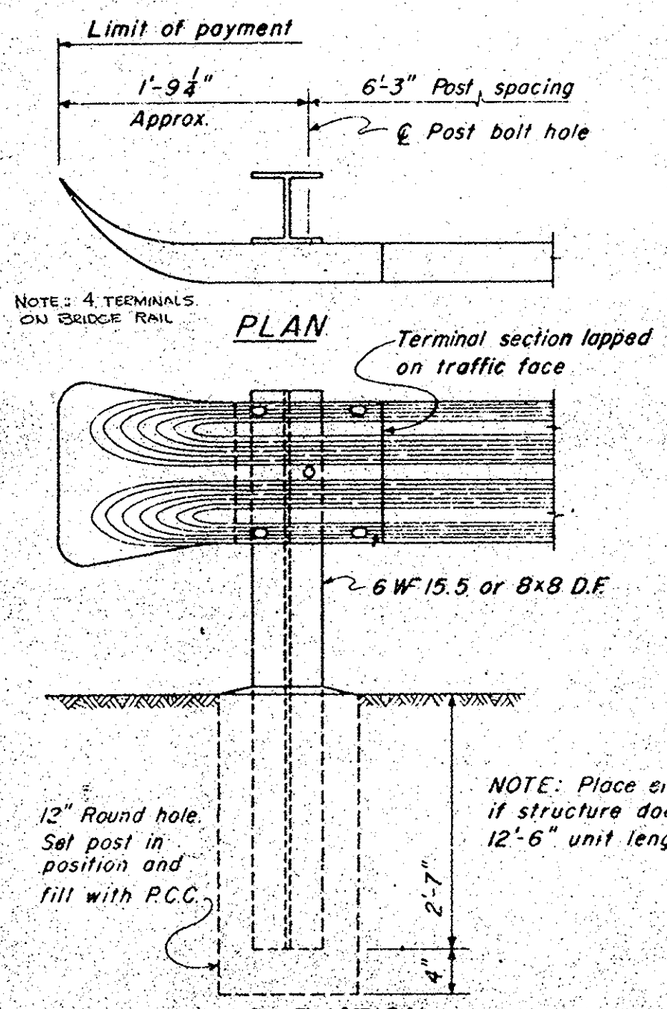

ELEVATION

END POST ON SHOULDER

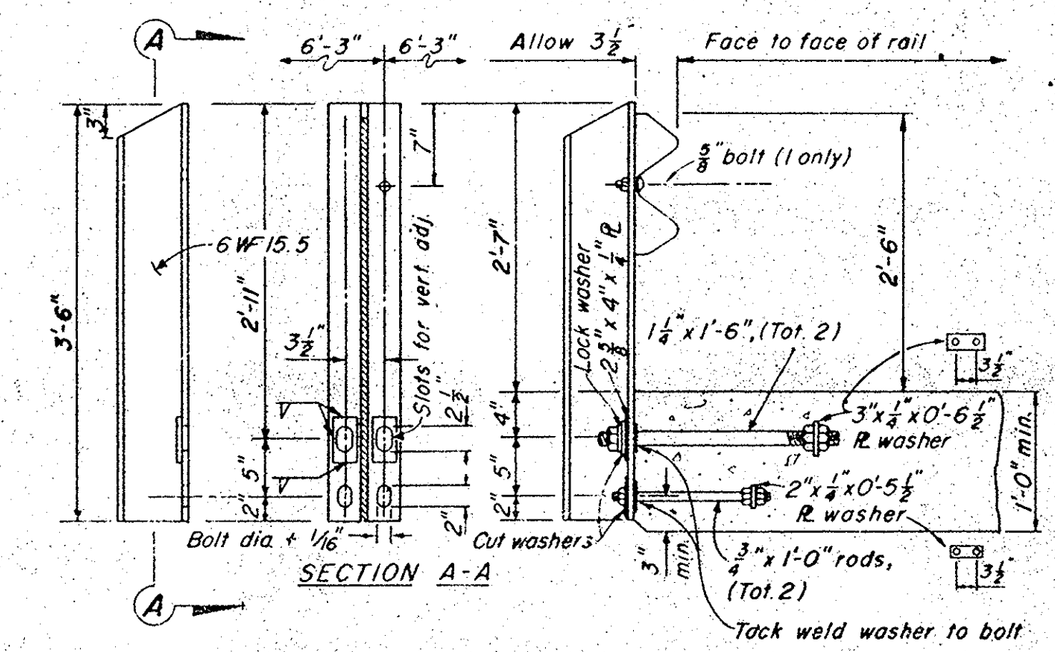

SECTION A-A

POST FOR THIN SLABS

AS BUILT

MICROFILMED JUN 12 1989

Plan Scale: Ball Road Bridge
Sheet: 15 of 18 Scale: None
Road: 02.5:1
Septa

ORANGE COUNTY ROAD DEPARTMENT

BALL ROAD BRIDGE SA-12 ACROSS SANTA ANA RIVER

GUARD RAIL DETAILS - EXCAVATION & BACKFILL DET.

SCALE: NONE SHEET 15 OF 18

METAL BEAM GUARD RAIL DETAILS