EXACT® EXACT LEVEL & [illegible] BRIDGE, N.J., U.S.A. STRAIGHT EDGE RULE SE-48

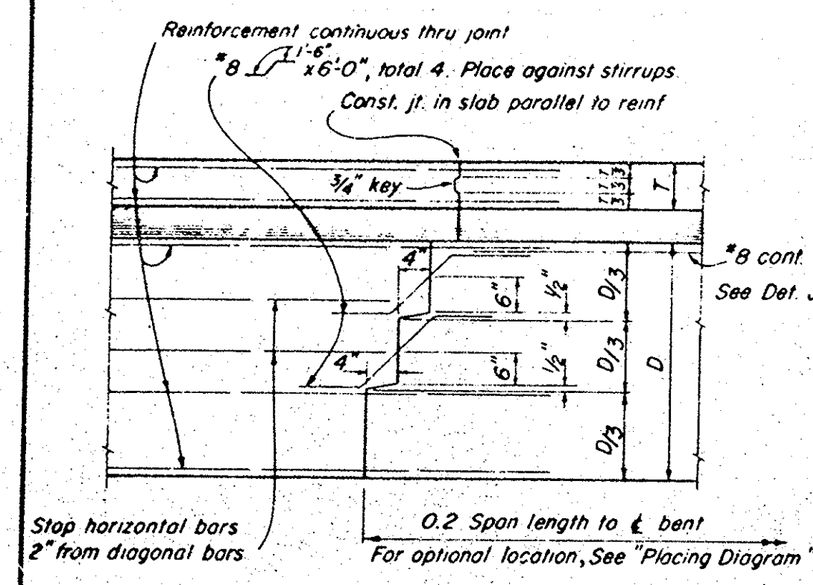

TRANSVERSE GIRDER CONSTRUCTION JOINTS
DETAIL J-3

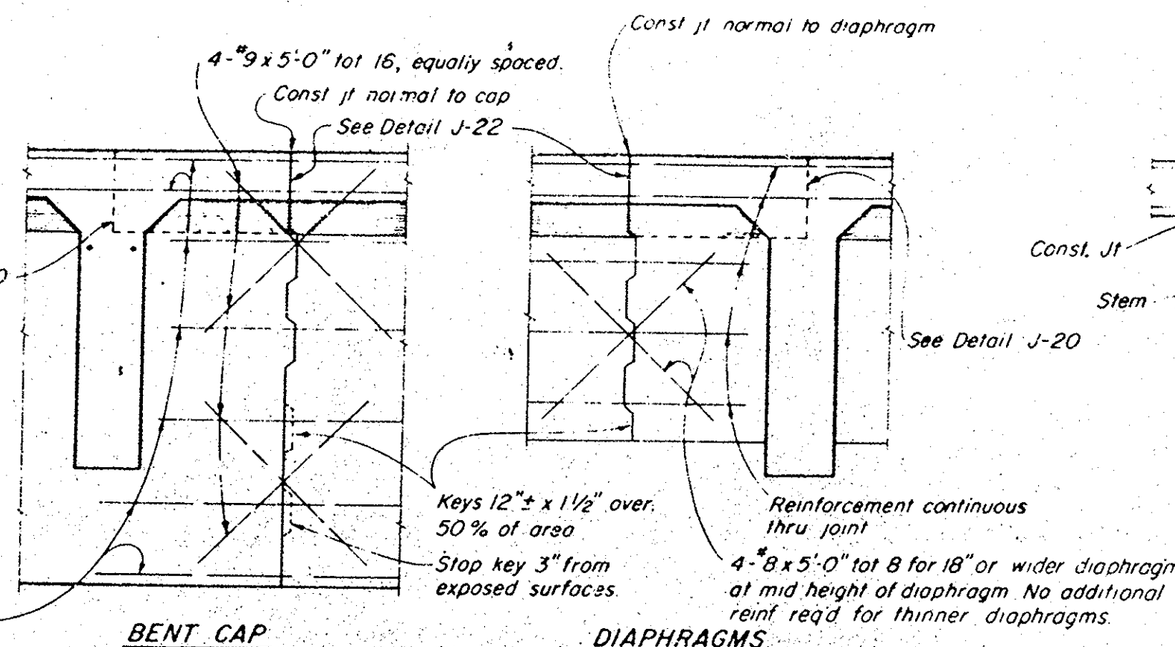

BENT CAP
LONGITUDINAL CONSTRUCTION JOINTS
DIAPHRAGMS
DETAIL J-4

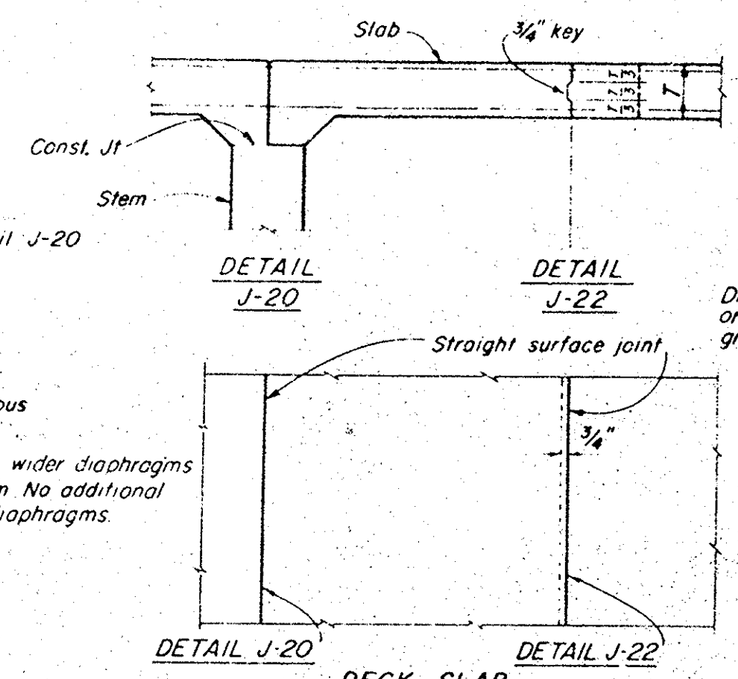

DECK SLAB
LONGITUDINAL CONSTRUCTION JOINTS
Note: Longitudinal construction joints in slab, if required, are to be located at edge of traffic lanes except as approved by the Engineer.

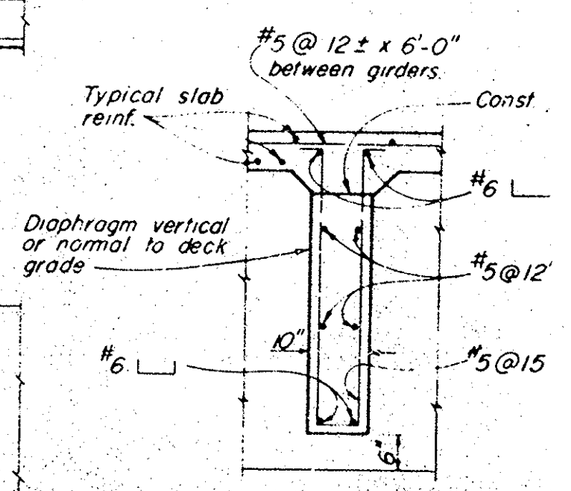

INTERMEDIATE DIAPHRAGM SECTI
DETAIL D-1

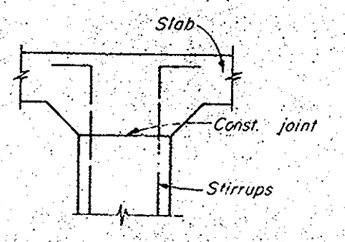

PART GIRDER

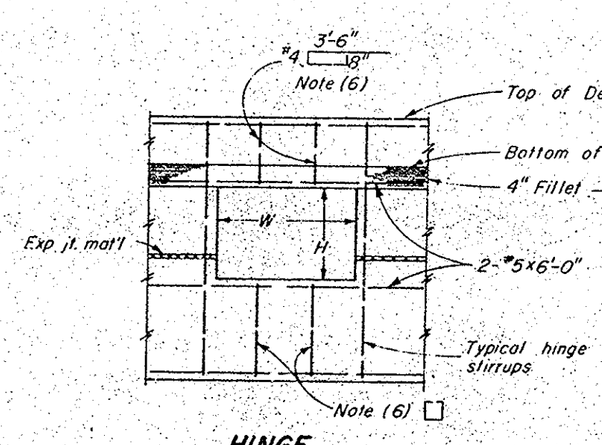

HINGE

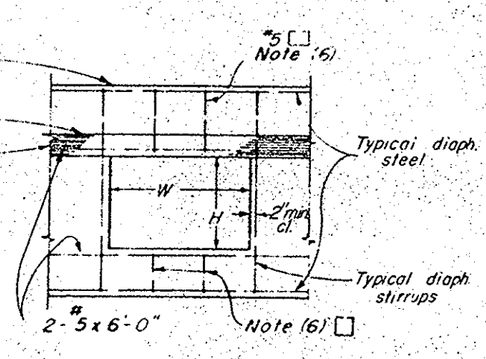

DIAPHRAGM

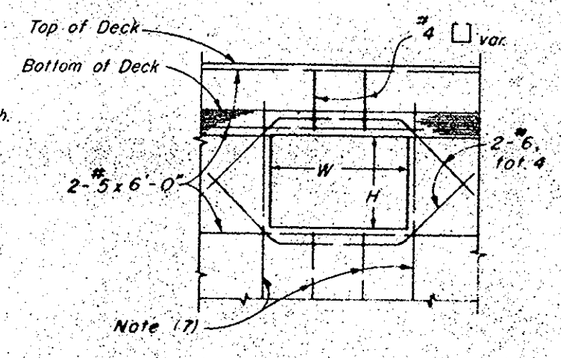

PIERS & ABUTMENTS

UTILITY OPENING DETAILS **AS BUILT**

MICROFILMED JUN 12 1989

Plan Width
Rail Bond Plate
Sheet 14 of 18 Remarks or Uses
Date
Sepia

NOTES

(1) For exact location and direction of openings see other sheets.
(2) Location and size of utility openings may be modified as directed by the Engineer, provided minimum dimensions are maintained.
(3) Girders not shown, see other sheets.
(4) Seal around utilities at abutments to be of sufficient strength to withstand earth pressure.
(5) All reinforcement detailed to be placed in addition to reinforcement shown on other sheets.
(6) Stirrups are same size as adjacent stirrups shown on other sheets.
(7) Main reinforcement to clear opening as detailed on other sheets.

ORANGE COUNTY ROAD DEPARTMENT
BALL ROAD
BRIDGE SA-12
ACROSS
SANTA ANA RIVER
MISCELLANEOUS DETAILS