EXACT® EXACT LEVEL & TOOL CO. PATERSON, N.J., U.S.A. STRAIGHT EDGE RULE SE-48

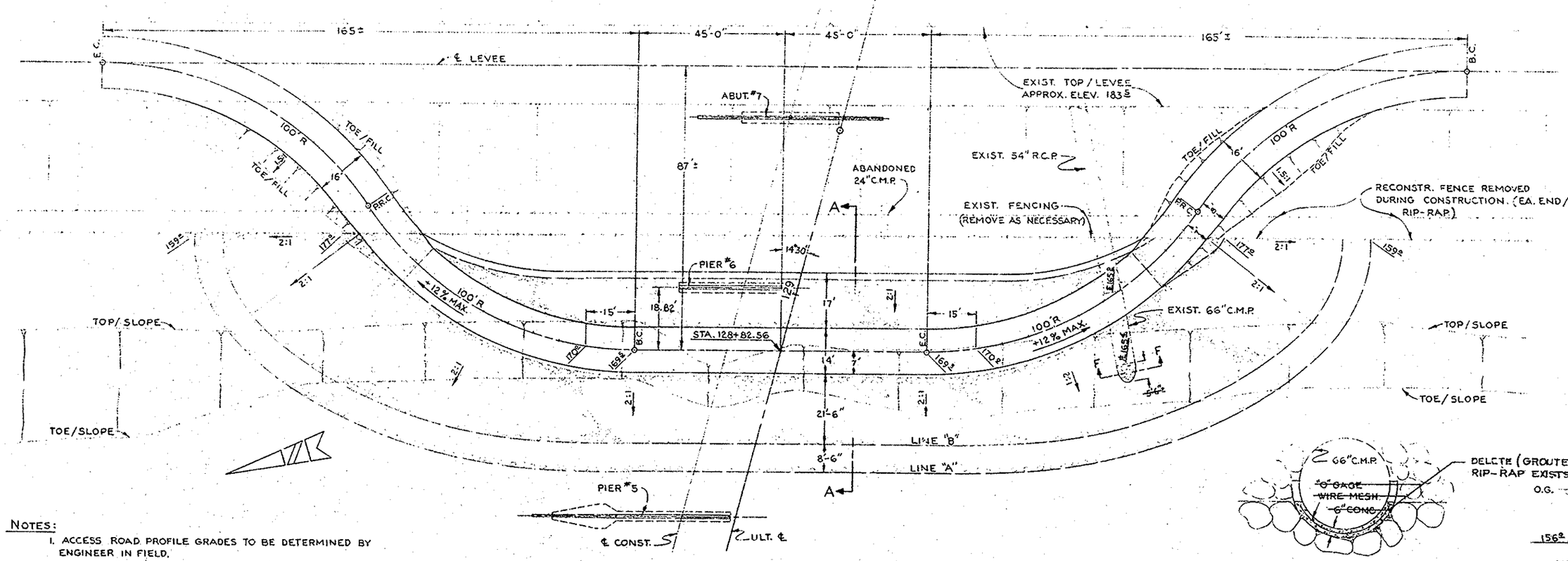

EAST LEVEE ACCESS ROAD PLAN

SCALE — 1" = 20'

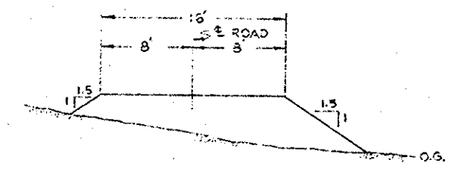

TYPICAL EAST LEVEE ACCESS ROAD FILL SECTION

SECTION F-F

SCALE — 1/4" = 1'-0"

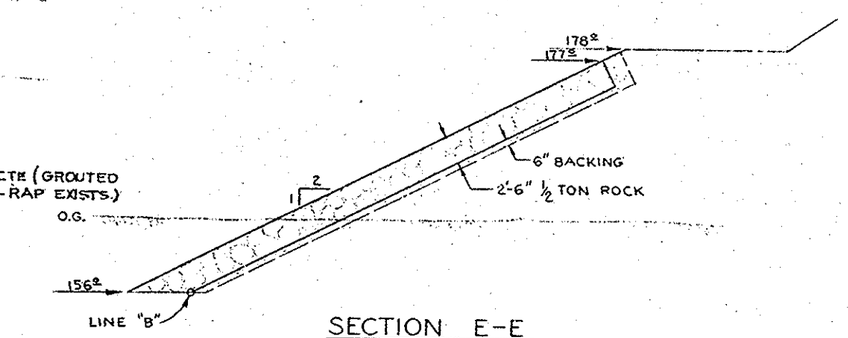

SECTION E-E

SCALE — 1/8" = 1'-0"

NOTES:

1. ACCESS ROAD PROFILE GRADES TO BE DETERMINED BY ENGINEER IN FIELD.
2. SEE SHT. #5 FOR APPROX. EXIST. CONTOURS.

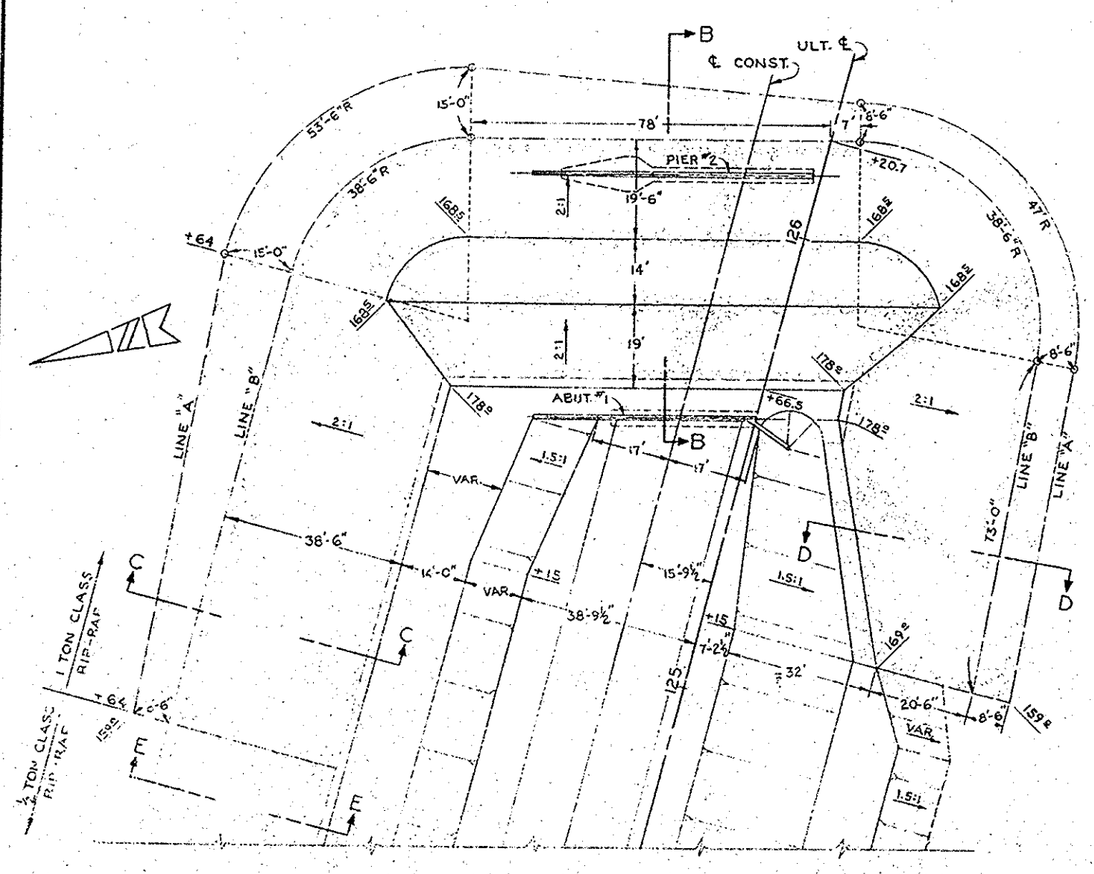

ABUTMENT #1 RIP-RAP DETAILS

SCALE — 1" = 20'

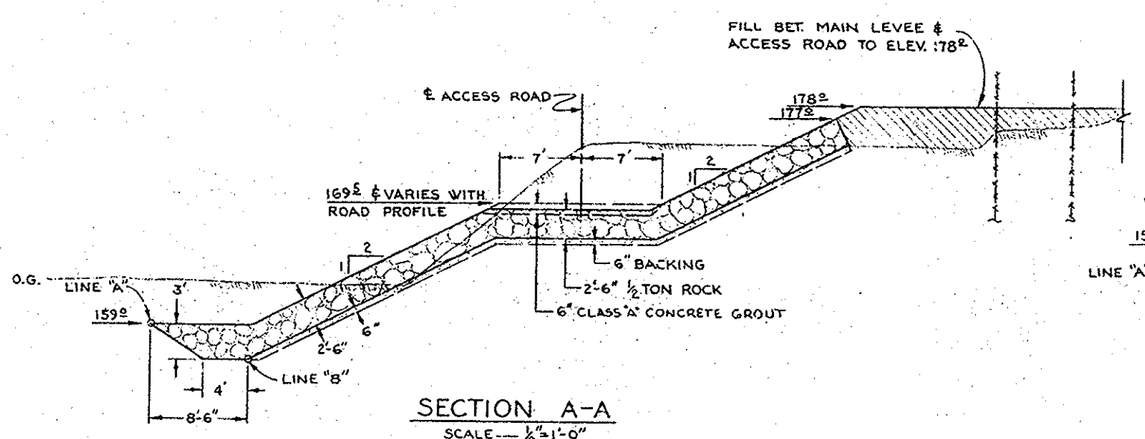

SECTION A-A

SCALE — 1/8" = 1'-0"

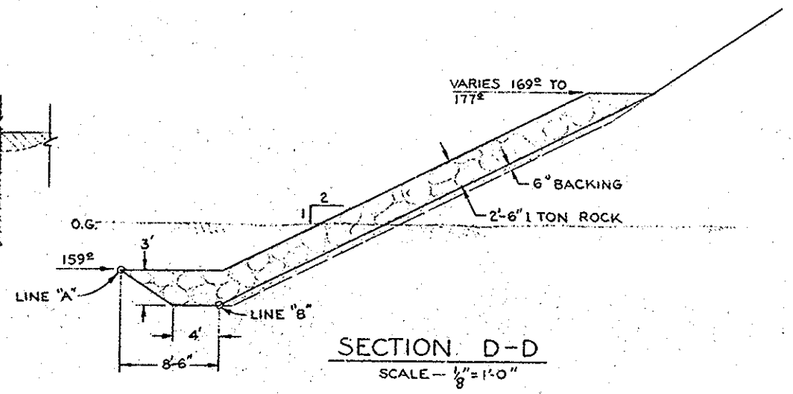

SECTION D-D

SCALE — 1/8" = 1'-0"

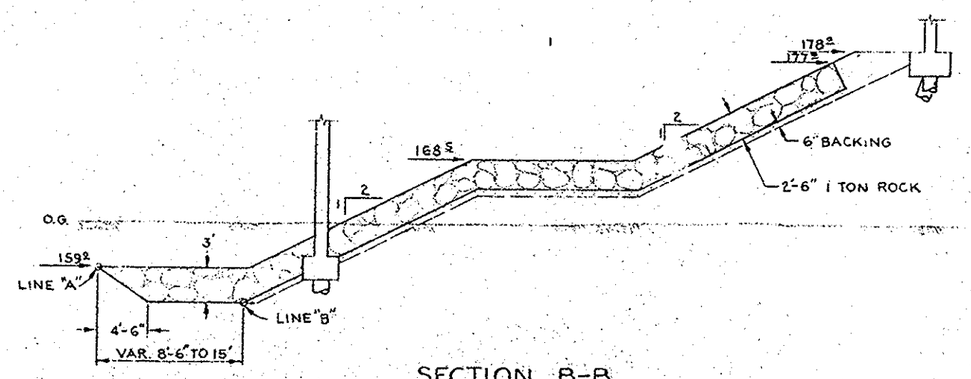

SECTION B-B

SCALE — 1/8" = 1'-0"

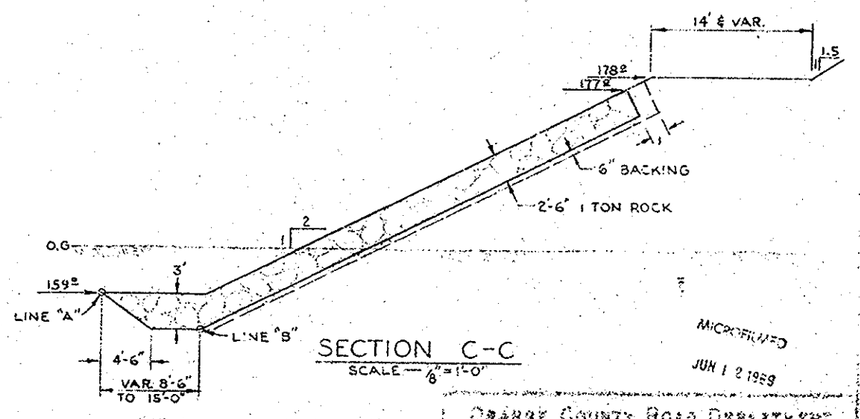

SECTION C-C

SCALE — 1/8" = 1'-0"

AS BUILT

MICROFILMED JUN 1 2 1989

Plan #9216
Ball Road Bridge
Sheet: 4 of 16 Scale: 1/8"=1'-0"
Red: 22.5:1
Vellum

ORANGE COUNTY ROAD DEPARTMENT

BALL ROAD BRIDGE SA-12 ACROSS SANTA ANA RIVER

EAST LEVEE ACCESS ROAD & RIP-RAP DETAILS

NOTED 4-23-14 of 12