ORANGE COUNTY
ENVIRONMENTAL MANAGEMENT AGENCY

SANTA ANA, CALIFORNIA

JOHN W. SIBLEY, ACTING DIRECTOR

PLANS FOR CONSTRUCTION OF

ANTONIO PARKWAY

PHASE II

ORTEGA HIGHWAY
TO
8,340 FT NORTHERLY

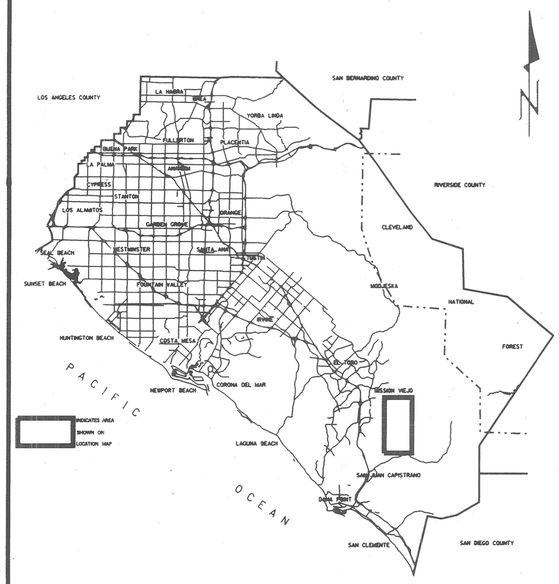

VICINITY MAP

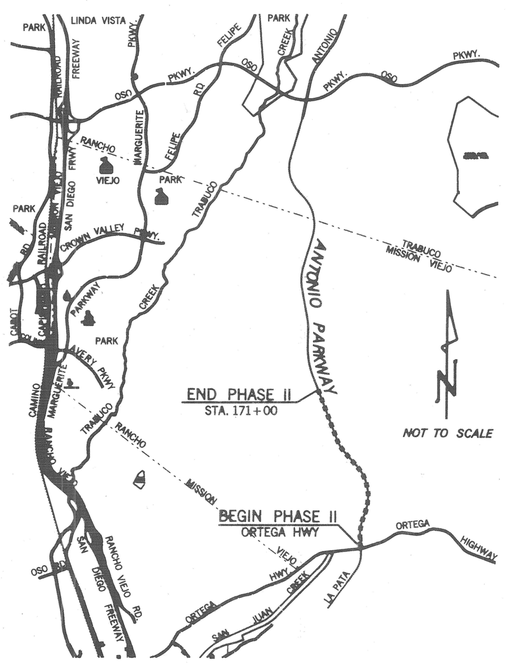

LOCATION MAP

FUNDED BY: ROAD FUNDS

EMA-PUBLIC WORKS

SUBMITTED: ROAD DESIGN CHIEF — DATE 11/1/96

REGISTERED PROFESSIONAL ENGINEER GERALD W. SCHUBERT No. C 27288 Exp. 3-31-97 CIVIL STATE OF CALIFORNIA

RECOMMENDED: DESIGN DIVISION MANAGER — DATE 11/1/96

REGISTERED PROFESSIONAL ENGINEER VINCENT P. ROSALES No. 30829 Exp. 3-31-00 CIVIL STATE OF CALIFORNIA

APPROVED: DIRECTOR OF PUBLIC WORKS — DATE Nov. 1, 1996

REVISIONS

NO.	DESCRIPTION	SHEETS	APPROVED	DATE
1	REVISED NOTE	38,39,40,41, AND 42		12-24
2	REVISED SECTION	38,39,40,41,42,46, AND 47		12-24
3	REVISED DETAIL	40,41, AND 42		12-24
4	REVISEL TERRACE DRAINS	ADDED 7D, 8D, 9D, 10D, 11D		9-19-97
5	ADDITION OF CIDH @ BENT 2	60 AND 63		10-23-97
6	AS BUILT SHOWN	51, 52, 54 & 64		
		7, 8, 9, 10, 11, 21, 22, 26		
		27, 31, 32, 33, 39, 44, 86 & 87		

INDEX OF SHEETS

UTILITY OWNER	PHONE NO.	CONTACT
SANTA FE PACIFIC PIPELINE PARTNERS	(714) 560–4944	GEORGE REED
SAN DIEGO GAS & ELECTRIC	(714) 361–8047	PATTI GOOD
THE GAS COMPANY	(714) 634–3041	JIM BEVANS
PACIFIC BELL	(714) 348–0595	SANDY WALTER
PACIFIC BELL	(714) 666–5707	BILL LOWING
COX COMMUNICATIONS	(714) 220–8828	MARTY ZUPANCIC
CAPISTRANO VALLEY WATER DISTRICT	(714) 493–1515	CRAIG HARRIS
SANTA MARGARITA WATER DISTRICT	(714) 459–6582	JAIME AGUILAR
SAN JUAN BASIN AUTHORITY	(714) 489–7735	MATT SMITH
SANTA MARGARITA RANCH OPERATIONS	(714) 493–1571	GARY JACKSON

BENCH MARK:

THE ELEVATIONS SHOWN HEREON ARE IN TERMS OF THE NATIONAL GEODETIC VERTICAL DATUM OF 1929, BASED LOCALLY UPON THE ORANGE COUNTY SURVEYOR'S 1995 ADJUSTMENT FOR BENCHMARKS OSO–C–91: ELEVATION 540.048' AND Y–312: ELEVATION 282.478'

OSO–C–91 IS AN OSC 3 3/4" ALUMINUM BENCHMARK DISK STAMPED "OSO–C–91" FLUSH IN A CONCRETE CATCH BASIN, ESTABLISHED BY OCS IN 1991

Y–312 IS STANDARD 3" BRONZE DISK ESTABLISHED BY USC & GS IN 1935

BASIS OF BEARINGS:

THE BEARINGS SHOWN HEREON ARE BASED ON THE BEARING BETWEEN OCS HORIZONTAL CONTROL STATION GPS #0198 AND STATION GPS #0742, BEING N 59°45'19" E, PER RECORDS ON FILE AT THE OFFICE OF THE ORANGE COUNTY SURVEYOR.

COORDINATES SHOWN ARE BASED ON THE CALIFORNIA COORDINATE SYSTEM (CCS83), ZONE VI, 1983 NAD (1991.35 EPOCH ADJUSTMENT).

DR. 3 (16158)
Sheet 1 Of 126

W. O. NO. ER02775C

DWG. NO.

SHEET 1 OF 126

DR. 3 (16158)

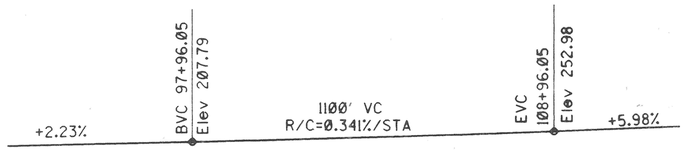

PROFILE GRADE

NO SCALE

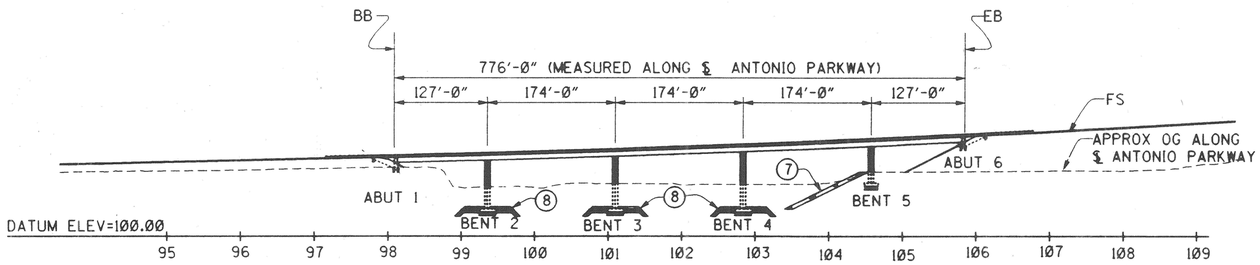

ELEVATION

1"=100'

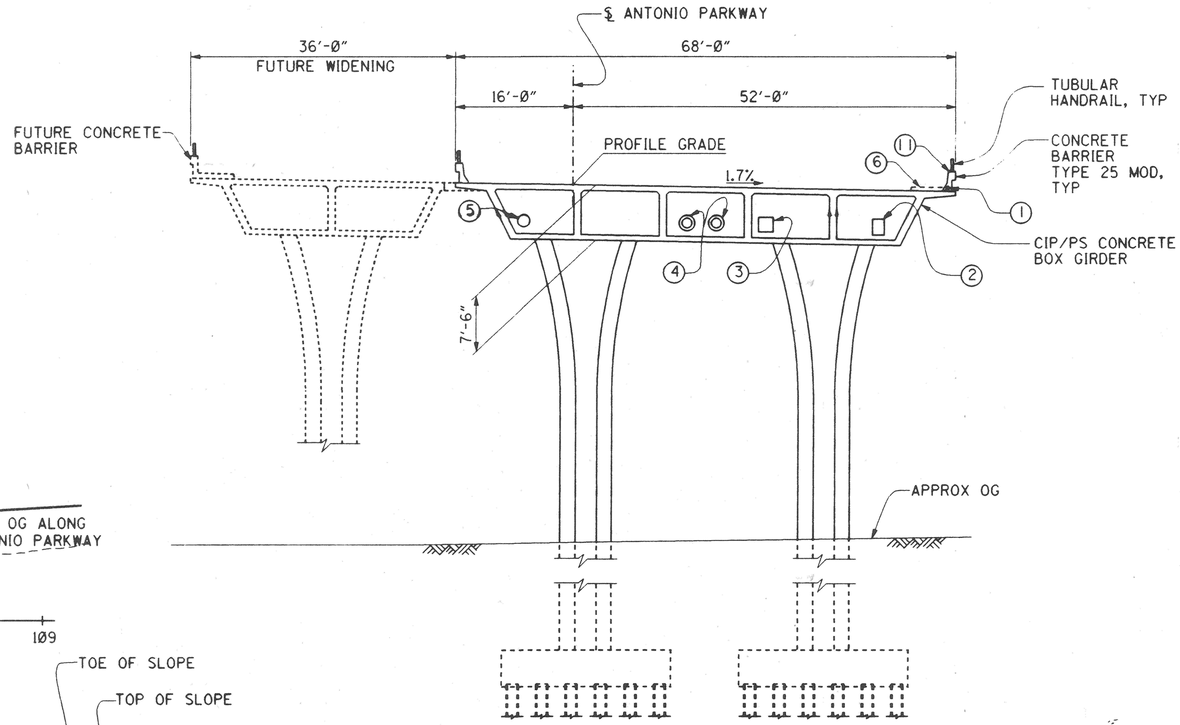

TYPICAL SECTION

1"=10'-0"

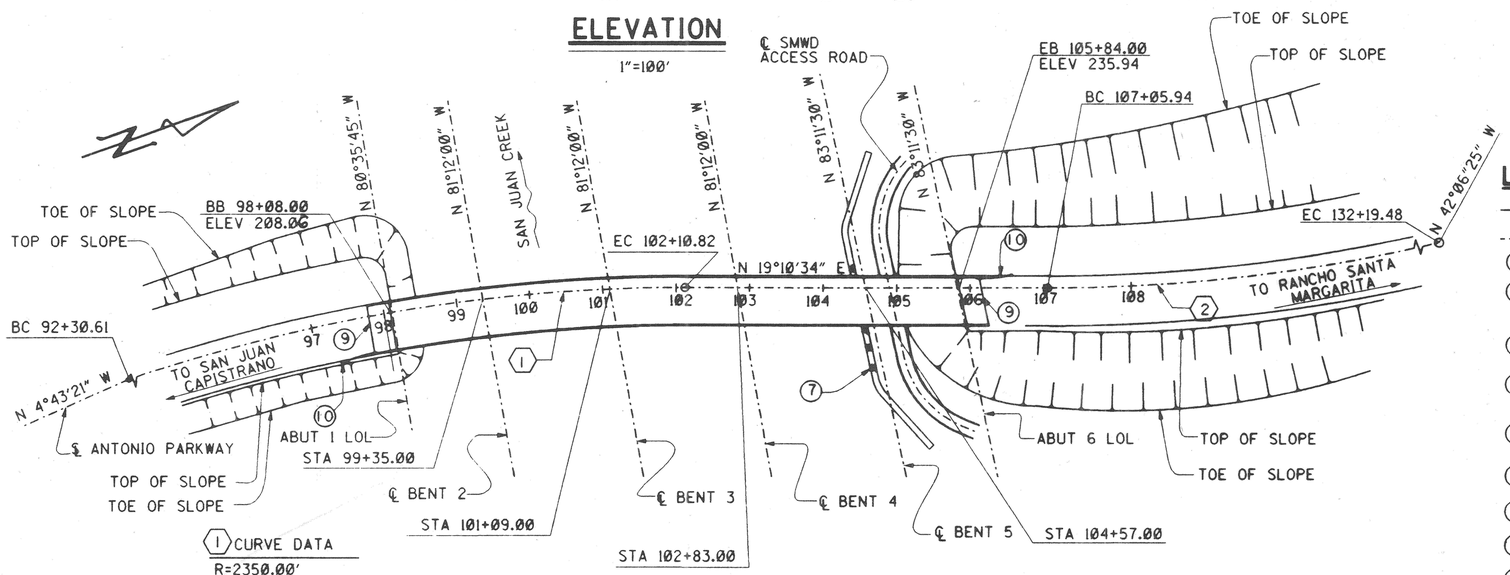

PLAN

1"=100'

① CURVE DATA

R=2350.00'
Δ=23° 53' 55"
L=980.21'

② CURVE DATA

R=2350.00'
Δ=61° 16' 59"
L=2513.54'

LEGEND

- —— = INDICATES NEW STRUCTURE
- ---- = INDICATES FUTURE STRUCTURE
- ① = 2 - 4" CONDUITS (COX CABLE)
- ② = UTILITY OPENING (SDG&E) FOR DIMENSIONS, SEE "TYPICAL SECTION" SHEET
- ③ = 24"x24" UTILITY OPENING (PAC BELL)
- ④ = 26" Ø UTILITY OPENING (IN BENT CAPS) W/16" CML&C STEEL PIPE (SMWD), SEE "SMWD UTILITY DETAILS" SHEET
- ⑤ = 20" Ø UTILITY OPENING FOR FUTURE 8" HDPE PIPE (SMWD), SEE "SMWD UTILITY DETAILS" SHEET
- ⑥ = FUTURE SIDEWALK
- ⑦ = RIPRAP BANK PROTECTION
- ⑧ = RIPRAP PILE CAP PROTECTION
- ⑨ = STRUCTURE APPROACH TYPE N(30S)
- ⑩ = METAL BEAM GUARDRAIL, TYPE 1 FLARE (A77A)
- ⑪ = TYPE 9A PULL BOX IN TOP OF BARRIER (TOT 3) SEE "MISCELLANEOUS DETAILS" SHEET

NOTES:

1. FOR GENERAL NOTES, CALTRANS STANDARD PLANS LIST, AND INDEX TO PLANS, SEE "INDEX TO PLANS" SHEET. FOR PILE DATA, SEE "FOUNDATION PLAN NO.1" SHEET.
2. FOR DECK DRAIN LOCATIONS, SEE "DECK DRAIN DETAILS" SHEET.

DR. 3 (16158)
Sheet 49 Of 126

RECORD DRAWING

½ 0 1 2
3 inches on original drawing

PLANS PREPARED BY:
HNTB
34 EXECUTIVE PARK
SUITE 200
IRVINE, CALIFORNIA 92614

MARK	DATE	DESCRIPTION

REVISIONS

PREPARED UNDER RESPONSIBLE CHARGE OF:
Richard A. Hart
RICHARD A. HART
RCE 38886 (EXP. 12-31-97)
10/8/96
DATE

ORANGE COUNTY
ENVIRONMENTAL MANAGEMENT AGENCY

ANTONIO PARKWAY
BRIDGE OVER
SAN JUAN CREEK

GENERAL PLAN

1/27

DESIGNED Steve A. Whitaker
DRAWN L. West
CHECKED R. Hart
SCALE AS SHOWN
DATE
DRAWING NO.
SHEET 49 OF 126

Design Filename: p:\24897\cadd\antopn1.dgn SWhitaker
Plotted on: 07-OCT-1996 17:50 Generated by:

DR. 3 (16158)

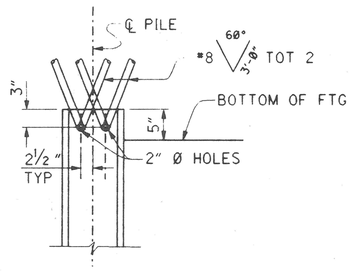

HP 10X57 STEEL PILE ANCHOR

NO SCALE

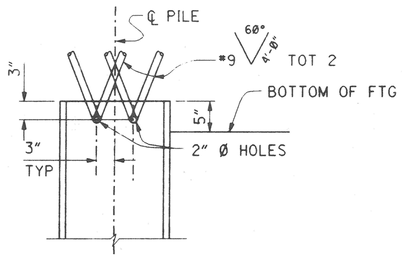

HP 14X89 STEEL PILE ANCHOR

NO SCALE

CALTRANS STANDARD PLANS DATED JULY 1992

A10A	ABBREVIATIONS
A10B	SYMBOLS
A62C	LIMITS OF PAYMENT FOR EXCAVATION AND BACKFILL-BRIDGE
A77A	METAL BEAM GUARD RAILING
A77B	METAL BEAM GUARD RAILING STANDARD HARDWARE
A77C	METAL BEAM GUARD RAILING POST AND BLOCKS
A77D	GUARD RAIL FLARES
B0-1	BRIDGE DETAILS
B0-5	BRIDGE DETAILS
B0-13	BRIDGE DETAILS
B7-1	BOX GIRDER DETAILS
B7-6	DECK DRAINS TYPES D-1 AND D-2
B7-10	UTILITY OPENING - BOX GIRDER
B7-11	UTILITY DETAILS
B8-5	CAST-IN-PLACE PRESTRESSED GIRDER DETAILS
B11-51	TUBULAR HAND RAILING
B11-53	CONCRETE BARRIER TYPE 25
ES-7A	SIGNAL, LIGHTING, AND ELECTRICAL SYSTEMS, ELECTRICAL DETAILS, STRUCTURE INSTALLATIONS
ES-7C	SIGNAL, LIGHTING, AND ELECTRICAL SYSTEMS, ELECTRICAL DETAILS, STRUCTURE INSTALLATIONS

GENERAL NOTES
LOAD FACTOR DESIGN

DESIGN: BRIDGE DESIGN SPECIFICATIONS (1992 AASHTO WITH INTERIMS AND REVISIONS BY CALTRANS)

DEAD LOAD: INCLUDES 35 psf FOR FUTURE WEARING SURFACE

LIVE LOADING: HS20-44 AND ALTERNATIVE AND PERMIT DESIGN LOAD.

SEISMIC LOADING:

PEAK ROCK ACCELARATION = 0.3g
DEPTH OF ALLUVIUM = 10 TO 80 FEET

DESIGN BASED ON CURRENT SPECIFICATION WITH DUCTILITY/RISK FACTOR Z= 6.0

REINFORCED CONCRETE:

fy = 60,000 psi
f'c = 3,500 psi, UNLESS OTHERWISE NOTED
n = 9
(SEE "CAMBER DIAGRAM AND CONCRETE STRENGTH & TYPE LIMITS" SHEET)

TRANSVERSE DECK SLAB (WORKING STRESS DESIGN)
fs = 20,000 psi
f'c = 1,200 psi
n = 10

PRESTRESSED CONCRETE: SEE PRESTRESSING NOTES ON "GIRDER LAYOUT" SHEETS.

INDEX TO PLANS

DR. 3 (16158)
Sheet 50 Of 126

RECORD DRAWING

½ 0 1 2
3 inches on original drawing

PLANS PREPARED BY:
HNTB
26 EXECUTIVE PARK
SUITE 200
IRVINE, CALIFORNIA 92614

MARK	DATE	DESCRIPTION

REVISIONS

PREPARED UNDER RESPONSIBLE CHARGE OF:
Richard A. Hart
NO. C 30885
EXP. 12-31-97
CIVIL
STATE OF CALIFORNIA
10/8/96
DATE
RICHARD A. HART
RCE 30885 (EXP. 12-31-97)

ORANGE COUNTY
ENVIRONMENTAL MANAGEMENT AGENCY

ANTONIO PARKWAY
BRIDGE OVER
SAN JUAN CREEK

INDEX TO PLANS

2/27

DESIGNED Steve A. Whitaker
DRAWN L. West
CHECKED R. Hart
SCALE AS SHOWN
DATE
DRAWING NO.
SHEET 50 OF 126

DR. 3 (16158)

Design Filename: p:\24897\cadd\antoinxl.dgn
Plotted on: 07-OCT-1996 17:16 Generated by: SWhitaker

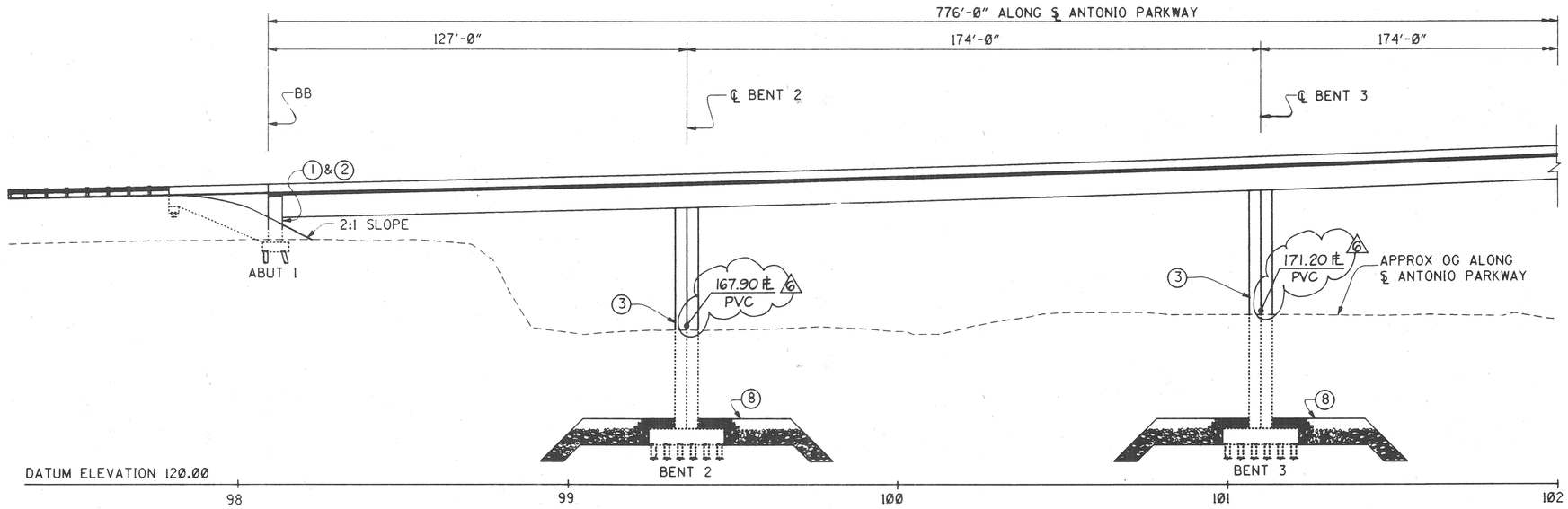

DEVELOPED ELEVATION

1"=20'

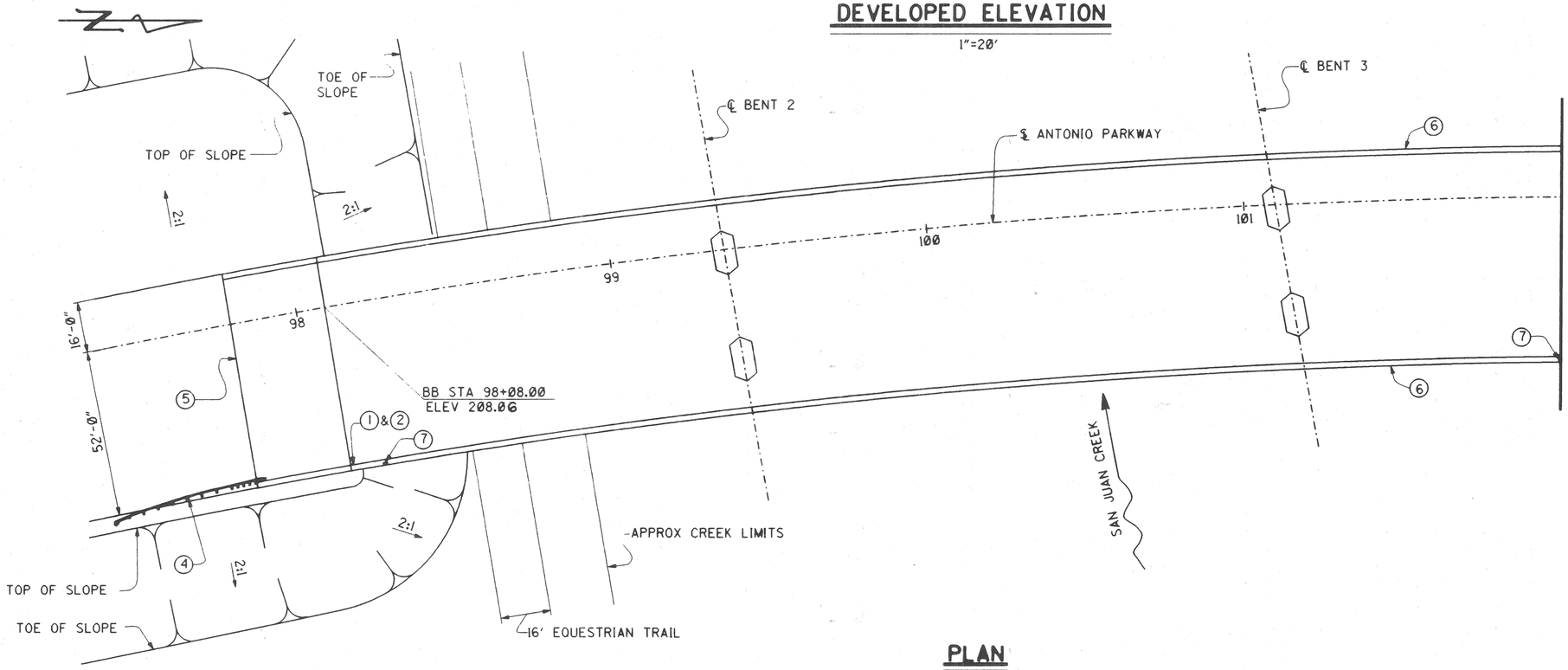

PLAN

1"=20'

LEGEND

1. = PAINT BRIDGE NO. 55C-628
2. = PAINT "ANTONIO PARKWAY BRIDGE" AND YEAR COMPLETED
3. = PAINT BENT NO.
4. = METAL BEAM GUARD RAIL, TYPE I FLARE (A77A)
5. = STRUCTURE APPROACH TYPE N(30S)
6. = CONCRETE BARRIER TYPE 25 MOD
7. = TYPE 9A PULL BOX IN TOP OF BARRIER (TOT 3) SEE "MISCELLANEOUS DETAILS" SHEET
8. = RIPRAP PILE CAP PROTECTION, SEE "EROSION PROTECTION PLAN" SHEET

NOTES:

1. FOR TYPICAL SECTION, SEE "GENERAL PLAN" SHEET.
2. FOR DECK DRAIN LOCATIONS, SEE "DECK DRAIN DETAILS" SHEET.
3. FOR MANHOLE AND SOFFIT ACCESS OPENINGS, SEE GIRDER LAYOUTS.

DR. 3 (16158)
Sheet 51 Of 126

RECORD DRAWING

½ 0 1 2
3 Inches on original drawing

MARK	DATE	DESCRIPTION
6	10/99	AS BUILT SHOWN

REVISIONS

PREPARED UNDER RESPONSIBLE CHARGE BY:
Richard A. Hart
NO. C 036885
EXP. 12-31-97
CIVIL
STATE OF CALIFORNIA
10/8/96
RICHARD A. HART — DATE
RCE 36885 (EXP. 12-31-97)

PLANS PREPARED BY:
HNTB
26 EXECUTIVE PARK
SUITE 200
IRVINE, CALIFORNIA 92614

ORANGE COUNTY
ENVIRONMENTAL MANAGEMENT AGENCY

ANTONIO PARKWAY
BRIDGE OVER
SAN JUAN CREEK

STRUCTURE PLAN NO. 1

3/27

DESIGNED Steve A. Whitaker
DRAWN L. West
CHECKED R. Hart
SCALE AS SHOWN
DATE
DRAWING NO.
SHEET 51 OF 126

DR. 3 (16158)

Design Filename: p:\24897\cadd\antostla.dgn
Plotted on: 07-OCT-1996 15:47 Generated by: SWhitaker

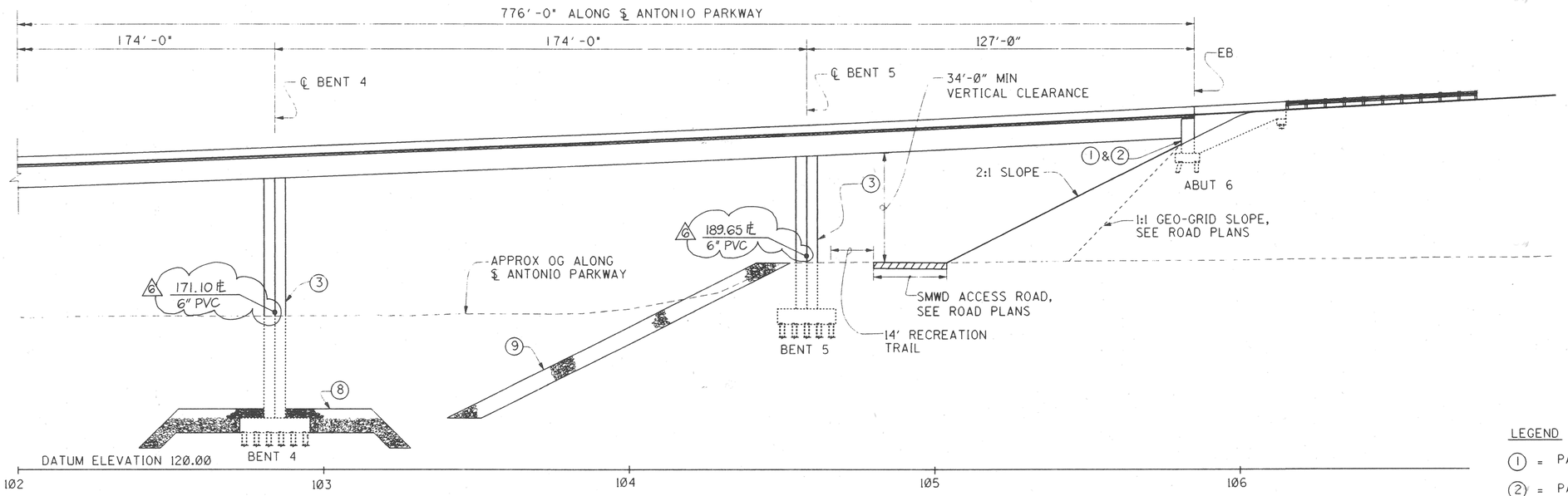

DEVELOPED ELEVATION

1"=20'

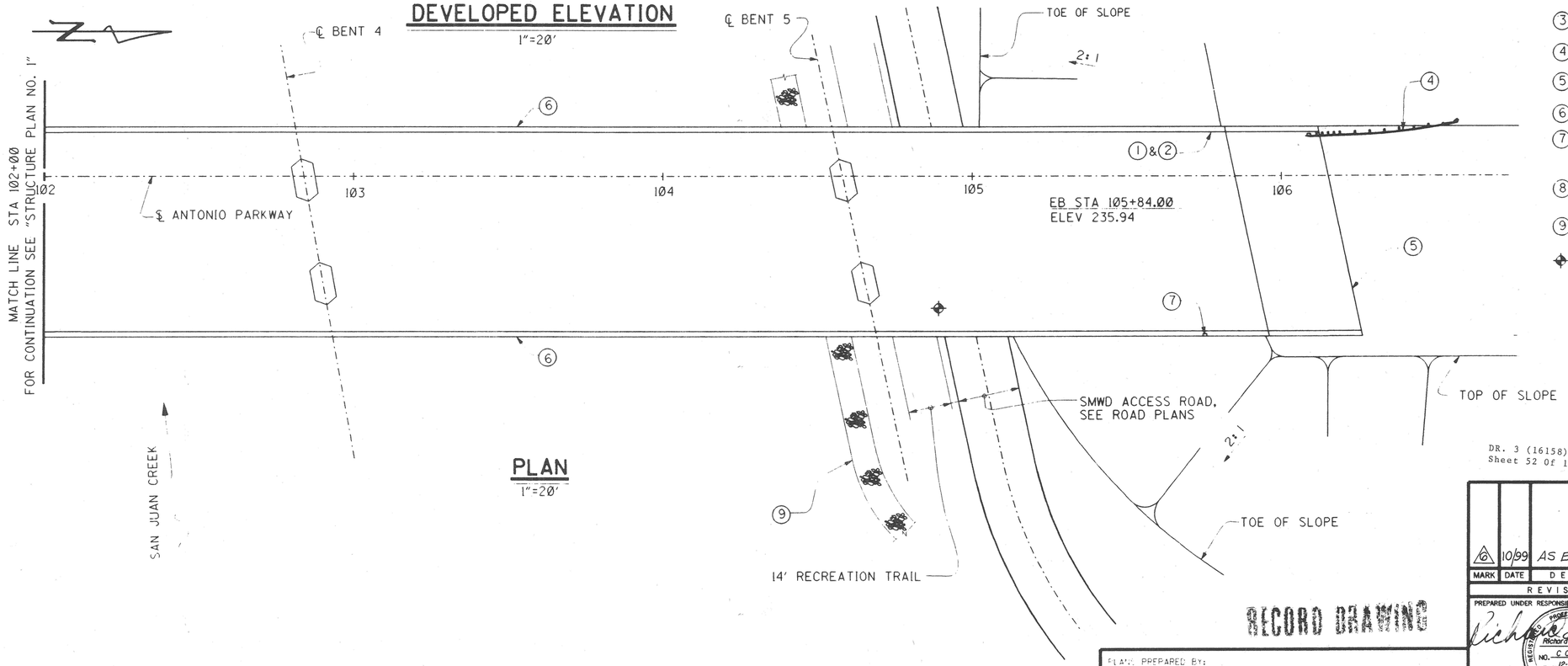

PLAN

1"=20'

LEGEND

1 = PAINT BRIDGE NO. 55C-628

2 = PAINT "ANTONIO PARKWAY BRIDGE" AND YEAR COMPLETED

3 = PAINT BENT NO.

4 = METAL BEAM GUARD RAIL, A77A

5 = STRUCTURE APPROACH TYPE N(30S)

6 = CONCRETE BARRIER TYPE 25 MOD

7 = TYPE 9A PULL BOX IN TOP OF BARRIER (TOT 3) SEE "MISCELLANEOUS DETAILS" SHEET

8 = RIPRAP BANK CAP PROTECTION, SEE "EROSION PROTECTION PLAN" SHEET

9 = RIPRAP BANK PROTECTION, SEE "EROSION PROTECTION PLAN" SHEET

✦ = INDICATES POINT OF MINIMUM VERTICAL CLEARANCE

NOTE:

1. FOR TYPICAL SECTION, SEE "GENERAL PLAN" SHEET.
2. FOR DECK DRAIN LOCATIONS, SEE "DECK DRAIN DETAILS" SHEET.
3. FOR MANHOLE AND SOFFIT ACCESS OPENINGS, SEE GIRDER LAYOUTS.

DR. 3 (16158)
Sheet 52 Of 126

1 1/2 0 1 2
3 Inches on original drawing

RECORD DRAWING

PLANS PREPARED BY:
HNTB
36 EXECUTIVE PARK
SUITE 200
IRVINE, CALIFORNIA 92614

MARK	DATE	DESCRIPTION
6	10/99	AS BUILT SHOWN

REVISIONS

PREPARED UNDER RESPONSIBLE CHARGE OF:
Richard A. Hart
REGISTERED PROFESSIONAL ENGINEER Richard A. Hart NO. C 039595 EXP. 12-31-97 CIVIL STATE OF CALIFORNIA
10/8/96
RICHARD A. HART DATE
RCE 39595 (EXP. 12-31-97)

ORANGE COUNTY
ENVIRONMENTAL MANAGEMENT AGENCY

ANTONIO PARKWAY
BRIDGE OVER
SAN JUAN CREEK

STRUCTURE PLAN NO. 2

4/27

DESIGNED Steve A. Whitaker		SHEET
DRAWN L. West	CHECKED R. Hart	52
SCALE AS SHOWN	DATE	DRAWING NO.

OF 126

DR. 3 (16158)

Design Filename: p:\2489\ cadd\antos\2a.dgn
Plotted on: 07-OCT-1996 15:48 Generated By: SWhitaker

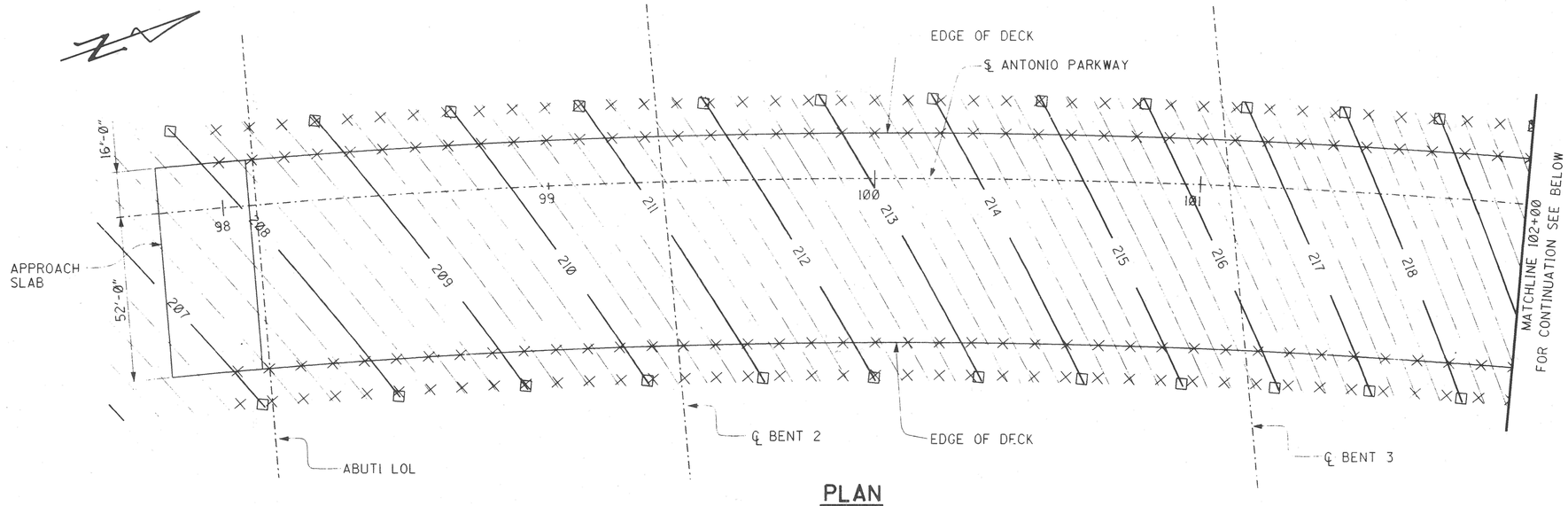

PLAN

1"=20'

LEGEND

× = INDICATES 10' INTERVALS ALONG STATION LINE

□ = INDICATES EVEN FOOT CONTOURS

NOTES:

1. CONTOURS DO NOT INCLUDE CAMBER.
2. CONTOUR INTERVAL IS 0.25 FEET.

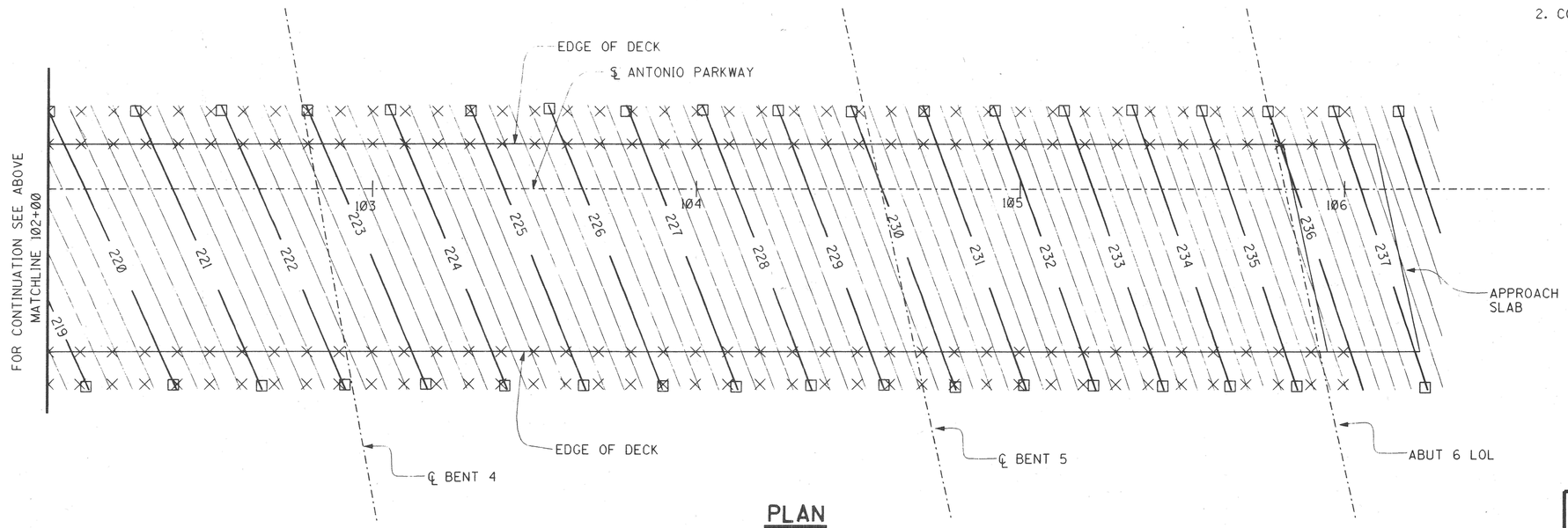

PLAN

1"=20'

DR. 3 (16158)
Sheet 53 Of 126

RECORD DRAWING

1 ½ 0 1 2
3 inches on original drawing

PLANS PREPARED BY:

HNTB

36 EXECUTIVE PARK
SUITE 200
IRVINE, CALIFORNIA 92614

MARK	DATE	DESCRIPTION

REVISIONS

PREPARED UNDER RESPONSIBLE CHARGE OF:

REGISTERED PROFESSIONAL ENGINEER — Richard A. Hart — NO. C 039595 — EXP. 12-31-97 — CIVIL — STATE OF CALIFORNIA

RICHARD A. HART — DATE 9/20/96
RCE 39595 (EXP. 12-31-97)

ORANGE COUNTY
ENVIRONMENTAL MANAGEMENT AGENCY

ANTONIO PARKWAY
BRIDGE OVER
SAN JUAN CREEK

DECK CONTOURS

5/27

DESIGNED Steve A. Whitaker		SHEET
DRAWN L. West	CHECKED R. Hart	53
SCALE AS SHOWN	DATE	DRAWING NO.
		OF 126

DR. 3 (16158)

Design Filename: p:\24897\cadd\antodi.dgn
Plotted on: 20-SEP-1996 08:41 Generated by: SWhitaker

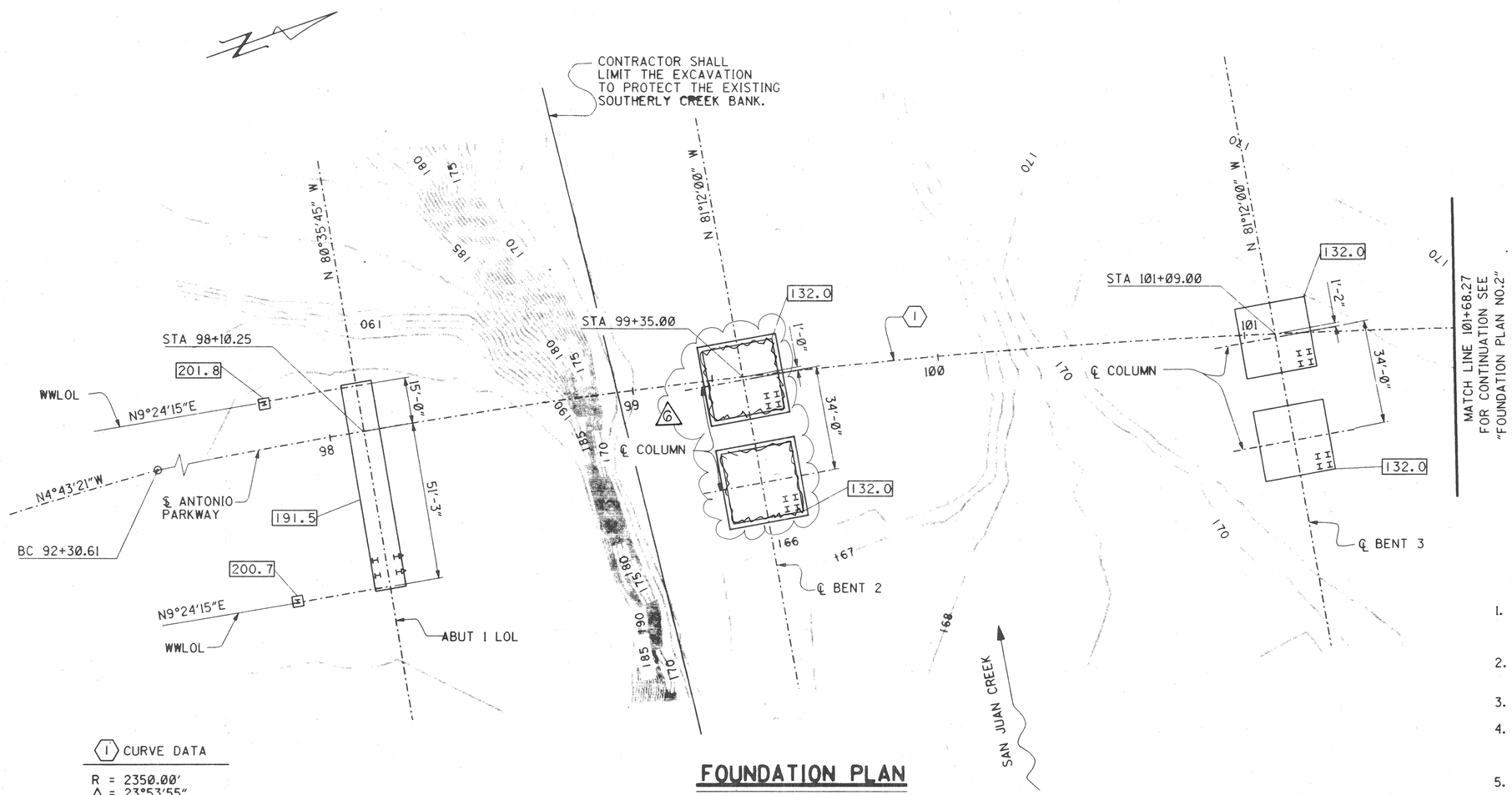

FOUNDATION PLAN

1"=20'

LEGEND

= INDICATES BOTTOM OF FOOTING ELEVATION.

↦ OR ⊢ = DENOTES PILES, ALL PILES NOT SHOWN FOR CLARITY.

BENCH MARK

O.C.S. BENCHMARK Y-312
RECOVERY NOTE BY US GEOLOGICAL SURVEY 1968.
GO 3 MILES NORTHEAST ALONG ORTEGA HIGHWAY (STATE HIGHWAY 74) FROM IT'S INTERSECTION WITH THE SAN DIEGO FREEWAY (INTERSTATE 5), TO THE BRIDGE OVER SAN JUAN CREEK, THENCE 0.6 OF A MILE EAST TO THE WEST END OF A DEEP CUT AT THE CURVE IN THE HIGHWAY, 30 FT. WEST OF A 18 INCH CORRUGATED METAL PIPE CULVERT, 29 FT. SOUTH OF THE CENTERLINE OF THE HIGHWAY, 9 FT. EAST OF A FENCE CORNER, 1 FT. NORTH OF THE FENCE, SET IN THE TOP OF A CONCRETE POST.
NGVD 29/1995 O.C.S. ADJUSTMENT
(LOCAL MEAN SEA LEVEL) ELEVATION (FT.) =282.478

NOTES:

1. ELEVATIONS SHOWN ARE BASED UPON NGVD29/1995 O.C.S. ADJUSTMENT (LOCAL MEAN SEA LEVEL) VERTICAL DATUM.
2. BASIS OF BEARINGS IS CALIFORNIA STATE COORDINATE SYSTEM OF 1983.
3. SEE ROAD PLANS FOR DETAILS NOT SHOWN.
4. THE CONTRACTOR SHALL VERIFY THE LOCATION OF ALL UTILITIES BEFORE EXCAVATION AND PILE DRIVING BEGINS.
5. CONTOURS SHOWN ARE ORIGINAL GROUND. CONTOUR INTERVAL IS 1.0 FEET.

(1) CURVE DATA

R = 2350.00'
Δ = 23°53'55"
L = 980.21'

PILE DATA

LOCATION	TYPE	DESIGN LOADING (SERVICE LOAD)	SPECIFIED TIP ELEVATION
ABUT 1 & WW	HP 10 X 57	70 TONS	160.0
BENT 2	HP 14 X 89	100 TONS	81.0
BENT 3	HP 14 X 89	100 TONS	81.0
BENT 4	HP 14 X 89	100 TONS	94.0
BENT 5	HP 14 X 89	100 TONS	126.0
ABUT 6 & WW	HP 10 X 57	70 TONS	158.0

RECORD DRAWING

DR. 3 (16158)
Sheet 54 Of 126

1 ½ 0 1 2
3 inches on original drawing

GOFFMAN, McCORMICK & URBAN, Inc.:
GEOTECHNICAL PROFESSIONAL: 9/23/96 APPROVAL DATE

PLANS PREPARED BY:
HNTB
26 EXECUTIVE PARK
SUITE 200
IRVINE, CALIFORNIA 92614

MARK	DATE	DESCRIPTION
6	11/00	AS BUILT SHOWN

REVISIONS

PREPARED UNDER RESPONSIBLE CHARGE OF:
REGISTERED PROFESSIONAL ENGINEER Richard A. Hart NO. C 039595 EXP. 12-31-97 CIVIL STATE OF CALIFORNIA
RICHARD A. HART 9/20/96 DATE
RCE 39595 (EXP. 12-31-97)

ORANGE COUNTY ENVIRONMENTAL MANAGEMENT AGENCY
ANTONIO PARKWAY BRIDGE OVER SAN JUAN CREEK

FOUNDATION PLAN NO. 1

6/27

DESIGNED Steve A. Whitaker
DRAWN L. West
CHECKED R. Hart
SCALE AS SHOWN
DATE
DRAWING NO.
54 OF 126

DR. 3 (16158)

Design Filename: p:\24897\cadd\ontofdtl.dgn
Plotted on: 20-SEP-1996 08:29 Generated by: SWhitaker

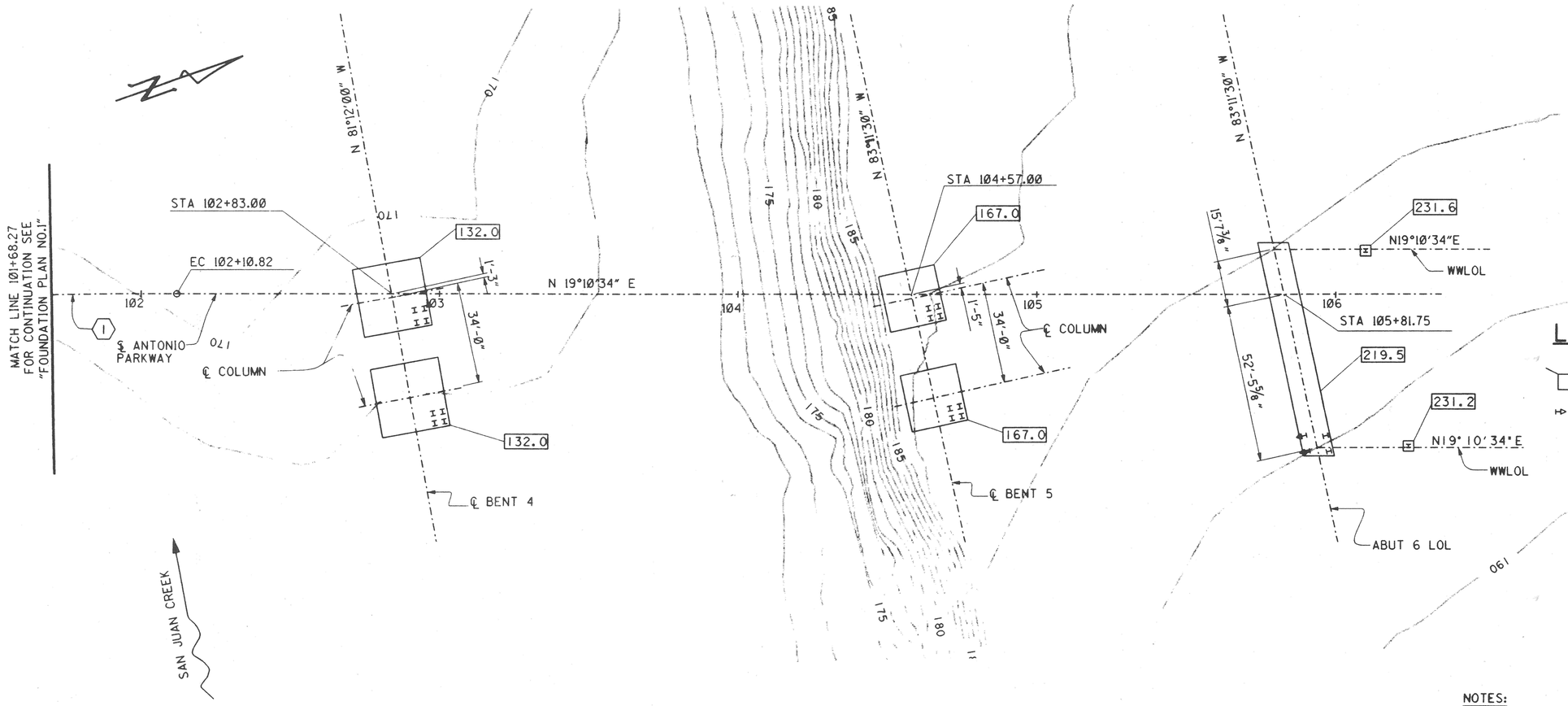

FOUNDATION PLAN

1"=20'

LEGEND

▭ = INDICATES BOTTOM OF FOOTING ELEVATION.

⊢⊣ OR ⊢ = DENOTES PILES, ALL PILES NOT SHOWN FOR CLARITY.

(1) CURVE DATA

R = 2350.00'
Δ = 23°53'55"
L = 980.21'

NOTES:

1. ELEVATIONS SHOWN ARE BASED UPON NGVD29/1995 O.C.S. ADJUSTMENT (LOCAL MEAN SEA LEVEL) VERTICAL DATUM.
2. BASIS OF BEARINGS IS CALIFORNIA STATE COORDINATE SYSTEM OF 1983.
3. SEE ROAD PLANS FOR DETAILS NOT SHOWN.
4. THE CONTRACTOR SHALL VERIFY THE LOCATION OF ALL UTILITIES BEFORE EXCAVATION AND PILE DRIVING BEGINS.
5. CONTOURS SHOWN ARE ORIGINAL GROUND. CONTOUR INTERVAL IS 1.0 FEET.

DR. 3 (16158)
Sheet 55 Of 126

RECORD DRAWING
0 1 2
3 inches on original drawing

MARK	DATE	DESCRIPTION

REVISIONS

PREPARED UNDER RESPONSIBLE CHARGE OF:
RICHARD A. HART — DATE 10/8/96
RCE 39696 (EXP. 12-31-97)

GOFFMAN, McCORMICK & URBAN, Inc. :

GEOTECHNICAL PROFESSIONAL: APPROVAL DATE

PLANS PREPARED BY:
HNTB
26 EXECUTIVE PARK
SUITE 200
IRVINE, CALIFORNIA 92614

ORANGE COUNTY
ENVIRONMENTAL MANAGEMENT AGENCY

ANTONIO PARKWAY
BRIDGE OVER
SAN JUAN CREEK

FOUNDATION PLAN NO. 2

7/27

DESIGNED Steve A. Whitaker
DRAWN L. West
CHECKED R. Hart
SCALE AS SHOWN
DATE
DRAWING NO.
SHEET 55 OF 126

Design Filename: p:\24897\cadd\antofd2.dgn
Plotted on: 07-OCT-1996 17:17 Generated by: SWhitaker

DR. 3 (16158)

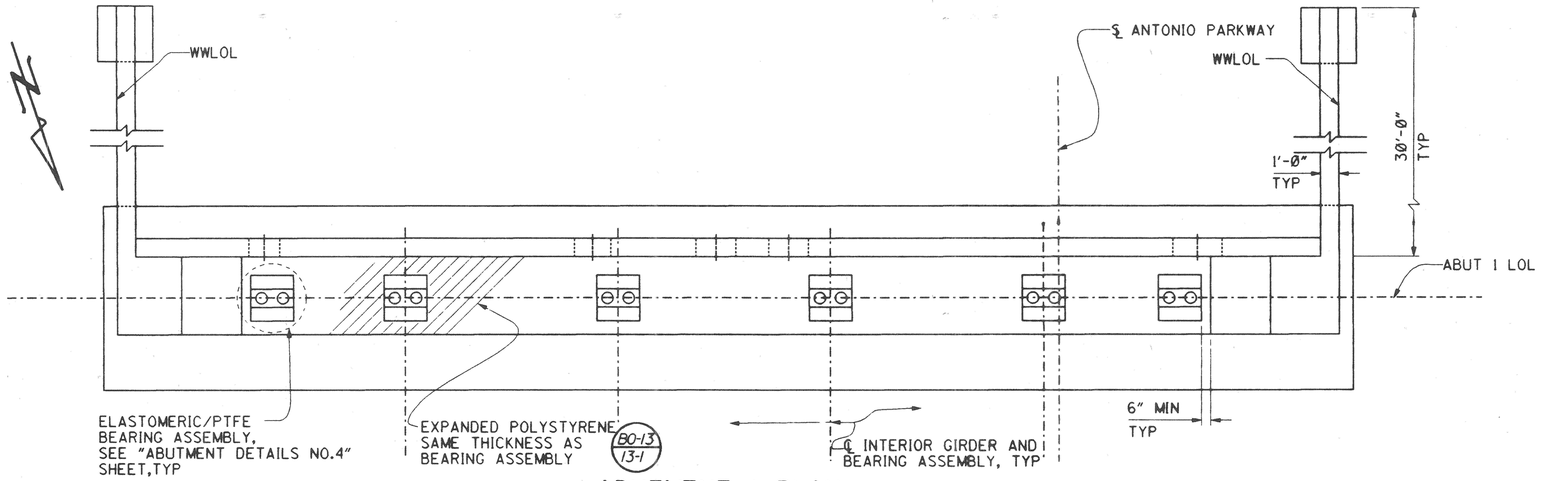

ABUTMENT 1 PLAN

1/4 "=1'-0"

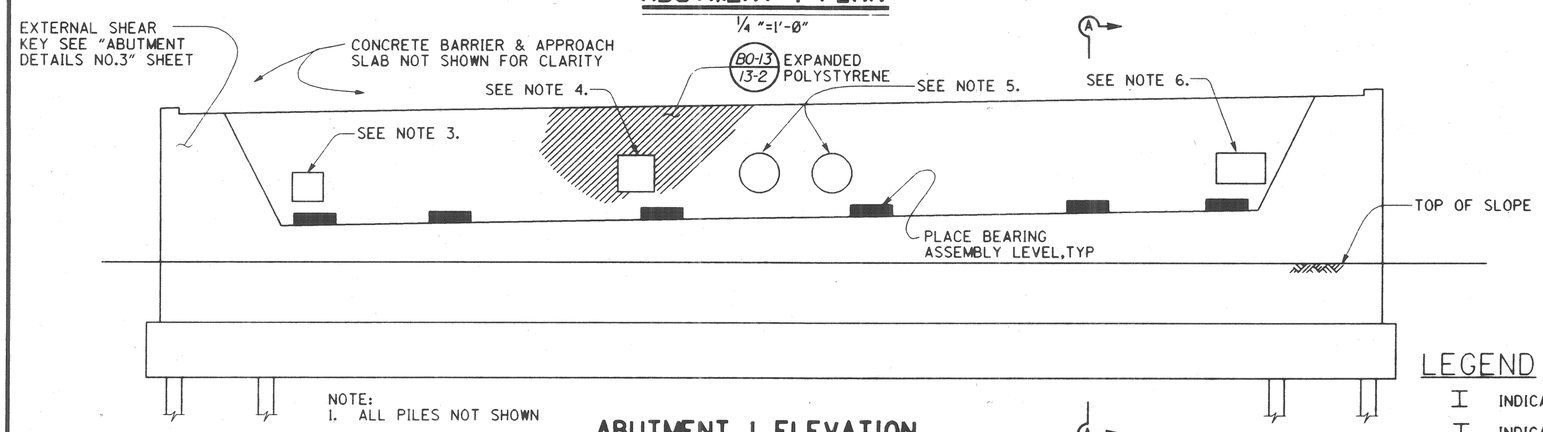

NOTE:
1. ALL PILES NOT SHOWN

ABUTMENT 1 ELEVATION

1/4 "=1'-0"

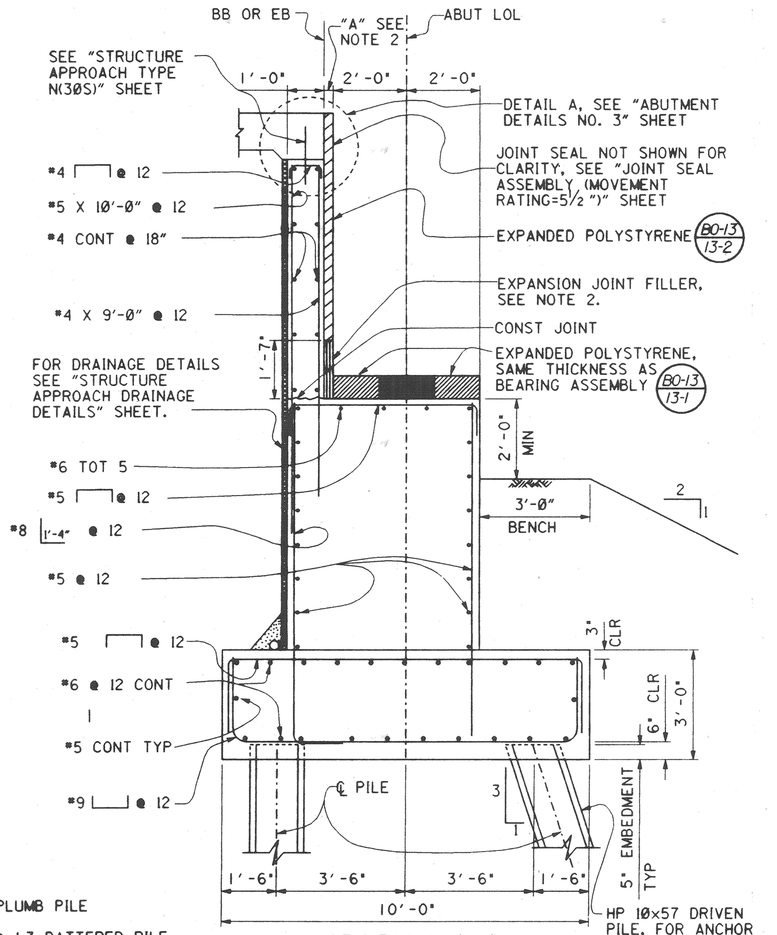

SECTION A-A

1/2 "=1'-0"

LEGEND

I INDICATES PLUMB PILE

I INDICATES @ 1:3 BATTERED PILE

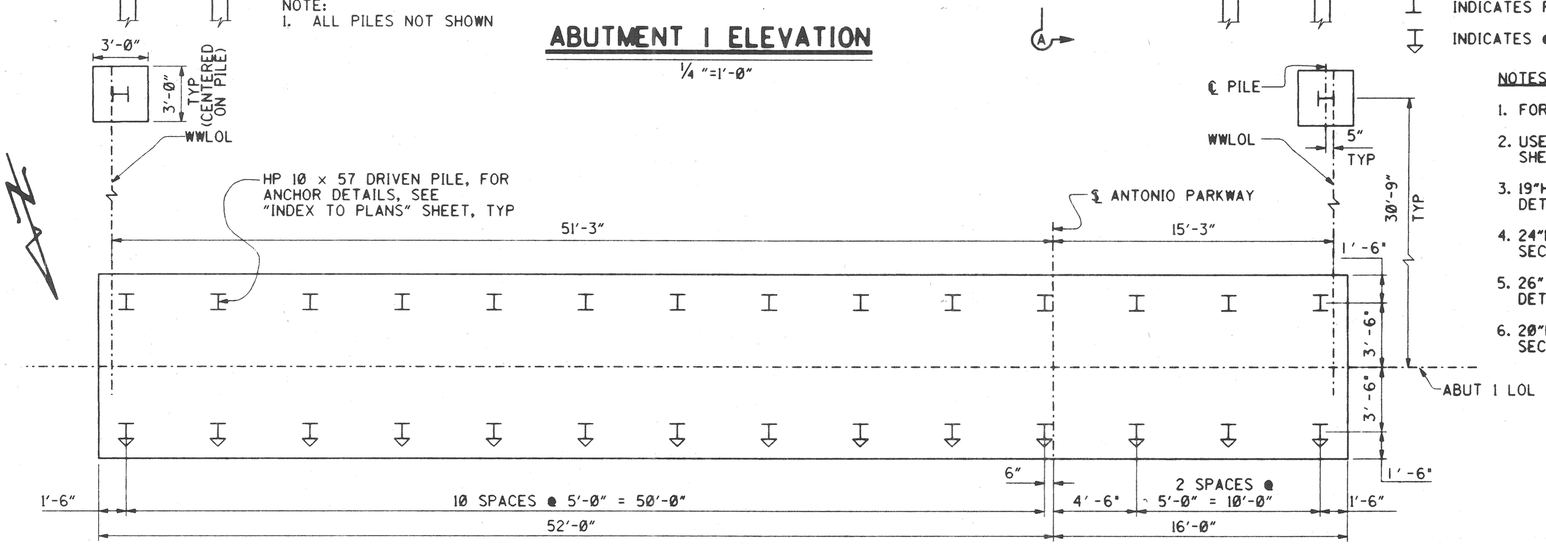

ABUTMENT 1 PILE LAYOUT

1/4 "=1'-0"

NOTES:

1. FOR DETAILS NOT SHOWN SEE "ABUTMENT DETAILS NO. 2, 3, 4" SHEETS.
2. USE DIMENSION "A" SHOWN ON "JOINT SEAL ASSEMBLY (MOVEMENT RATING = 5 1/2 ")" SHEET FOR EXPANSION JOINT THICKNESS.
3. 19"Hx20"W UTILITY OPENING IN ABUTMENT BACKWALL (SDG&E). FOR LOCATION & DETAILS, SEE "TYPICAL SECTION" SHEET. STEEL CASING NOT REQUIRED UNDER APPROACH SLAB.
4. 24"Hx24'W UTILITY OPENING (PAC BELL). FOR LOCATION & DETAILS, SEE "TYPICAL SECTION" SHEET. STEEL CASING NOT REQUIRED UNDER APPROACH SLAB.
5. 26" DIA UTILITY OPENING IN ABUTMENT BACKWALL (SMWD). FOR LOCATION & DETAILS, SEE "TYICAL SECTION" AND "SMWD UTILITY DETAILS" SHEETS.
6. 20"Hx32"W UTILITY OPENING (SMWD). FOR LOCATION & DETAILS, SEE "TYPICAL SECTION" AND "SMWD UTILITY DETAILS" SHEETS.

DR. 3 (16158)
Sheet 56 Of 126

RECORD DRAWING

1/2 0 1 2
3 Inches on original drawing

PLANS PREPARED BY:
HNTB
36 EXECUTIVE PARK
SUITE 200
IRVINE, CALIFORNIA 92614

MARK	DATE	DESCRIPTION

REVISIONS

PREPARED UNDER RESPONSIBLE CHARGE OF:
RICHARD A. HART
RCE 38666 (EXP. 12-31-97)
DATE 10/96

ORANGE COUNTY
ENVIRONMENTAL MANAGEMENT AGENCY

ANTONIO PARKWAY
BRIDGE OVER
SAN JUAN CREEK

ABUTMENT DETAILS NO. 1

8/27

DESIGNED Steve A. Whitaker
DRAWN L. West
CHECKED R. Hart
SCALE AS SHOWN
DATE
DRAWING NO.
SHEET 56 OF 126

Design Filename: p:\24897\cadd\antoabl.dgn
Plotted on: 08-OCT-1996 08:44 Generated by: SWhitaker

Dr. 3 (16158)

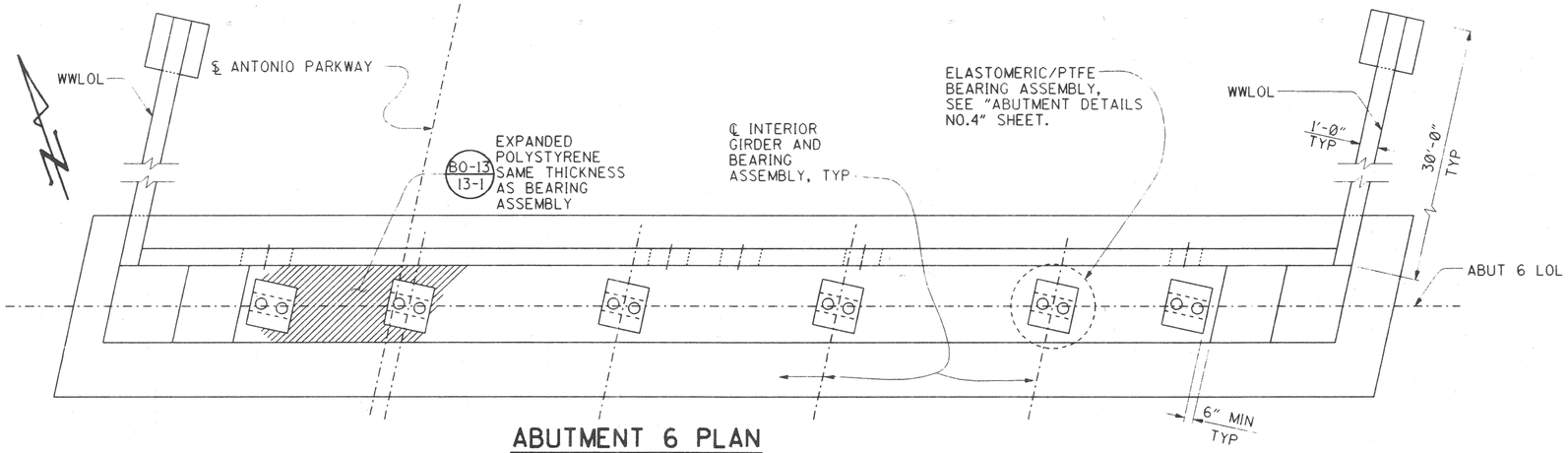

ABUTMENT 6 PLAN

1/4" = 1'-0"

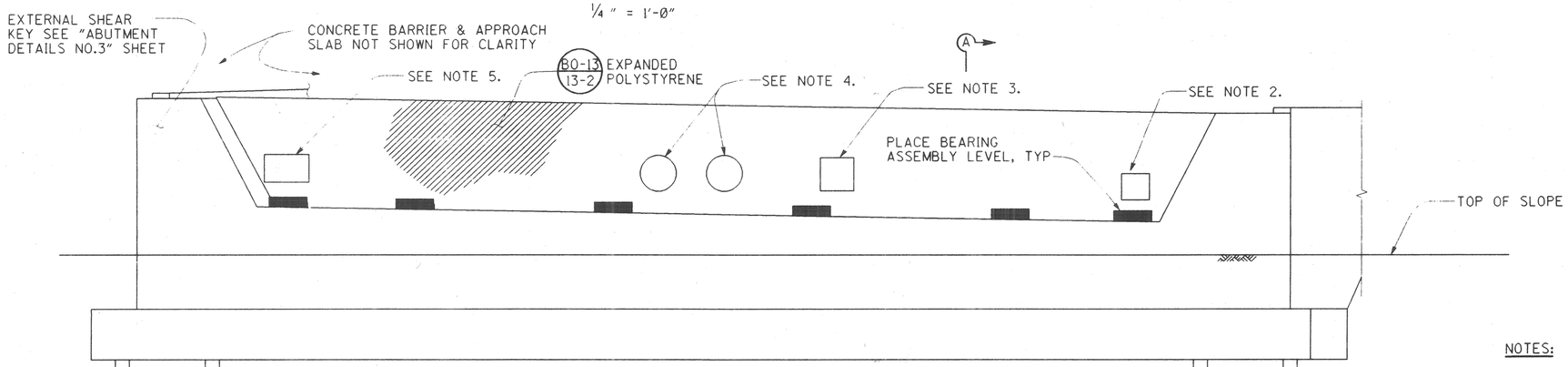

ABUTMENT 6 ELEVATION

1/4" = 1'-0"

NOTE:
1. ALL PILES NOT SHOWN

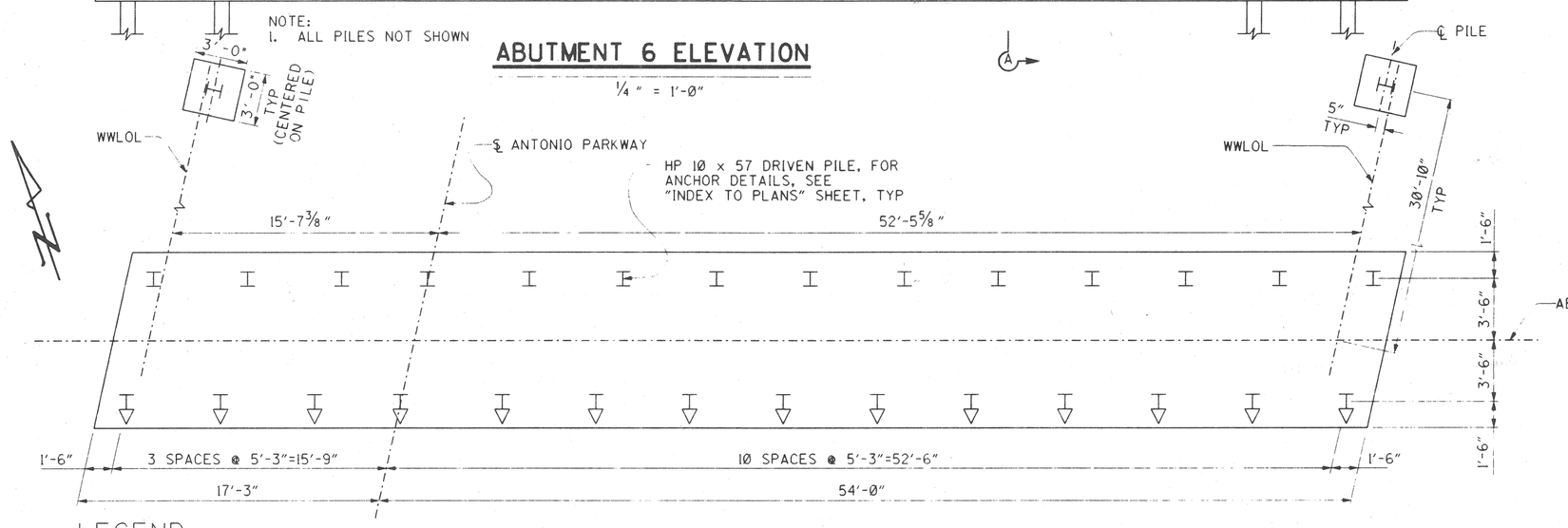

ABUTMENT 6 PILE LAYOUT

1/4" = 1'-0"

LEGEND

I = INDICATES PLUMB PILE

I = INDICATES BATTERED PILE

NOTES:

1. FOR DETAILS NOT SHOWN SEE "ABUTMENT DETAILS NO. 1, 3, 4" SHEETS.
2. 19"Hx20"W UTILITY OPENING IN ABUTMENT BACKWALL (SDG&E). FOR LOCATION & DETAILS, SEE "TYPICAL SECTION" SHEET. STEEL CASING NOT REQUIRED UNDER APPROACH SLAB.
3. 24"Hx24'W UTILITY OPENING (PAC BELL). FOR LOCATION & DETAILS, SEE "TYPICAL SECTION" SHEET. STEEL CASING NOT REQUIRED UNDER APPROACH SLAB.
4. 26" DIA UTILITY OPENING IN ABUTMENT BACKWALL (SMWD). FOR LOCATION & DETAILS, SEE "TYICAL SECTION" AND "SMWD UTILITY DETAILS" SHEETS.
5. 20"Hx32"W UTILITY OPENING (SMWD). FOR LOCATION & DETAILS, SEE "TYPICAL SECTION" AND "SMWD UTILITY DETAILS" SHEETS.

DR. 3 (16158)
Sheet 57 Of 126

RECORD DRAWING

1 1/2 0 1 2
3 Inches on original drawing

PLANS PREPARED BY:
HNTB
36 EXECUTIVE PARK
SUITE 200
IRVINE, CALIFORNIA 92614

MARK	DATE	DESCRIPTION

REVISIONS

PREPARED UNDER RESPONSIBLE CHARGE OF:
Richard A. Hart
REGISTERED PROFESSIONAL ENGINEER
NO. C 039595
EXP. 12-31-97
CIVIL
STATE OF CALIFORNIA
10/8/96
DATE
RICHARD A. HART
RCE 39595 (EXP. 12-31-97)

ORANGE COUNTY
ENVIRONMENTAL MANAGEMENT AGENCY

ANTONIO PARKWAY
BRIDGE OVER
SAN JUAN CREEK

ABUTMENT DETAILS NO. 2

9/27

DESIGNED Steve A. Whitaker
DRAWN L. West
CHECKED R. Hart
SCALE AS SHOWN
DATE
DRAWING NO.
SHEET 57 OF 126

DR. 3 (16158)

Design Filename: p:\24897\cadd antoab2.dgn
Plotted on: 07-OCT-1996 17:20 Generated by: Swhitaker

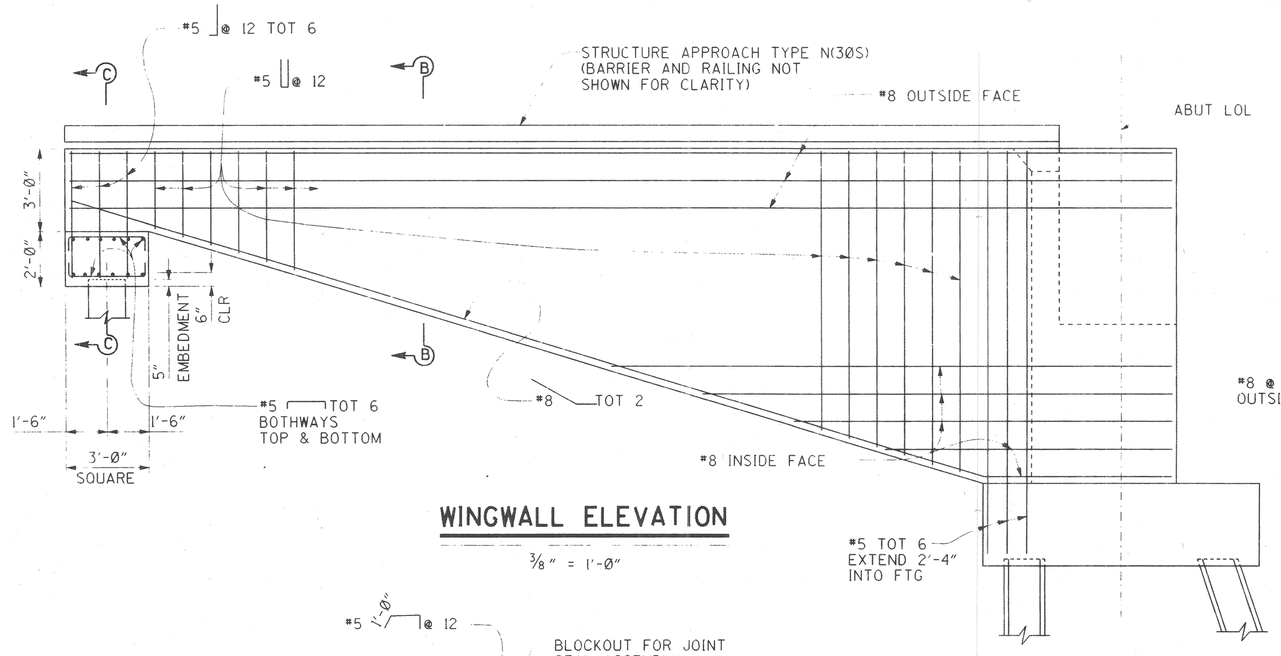

WINGWALL ELEVATION

3/8" = 1'-0"

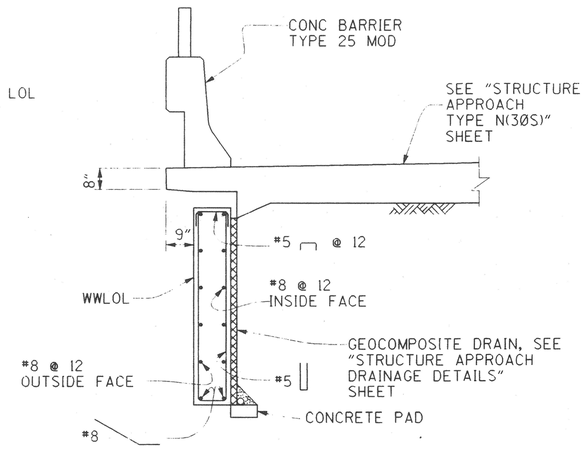

SECTION B-B

1/2"=1'-0"

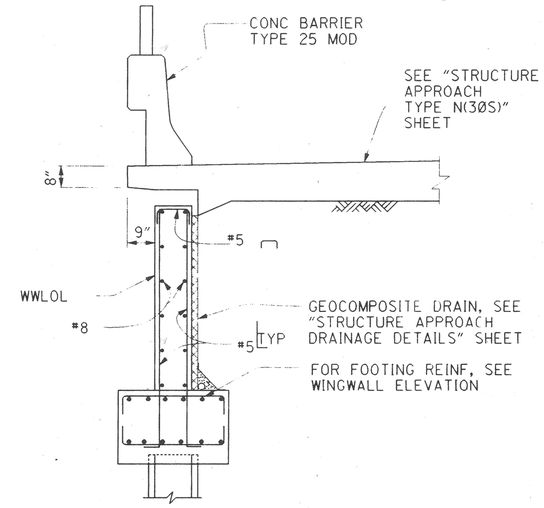

SECTION C-C

1/2"=1'-0"

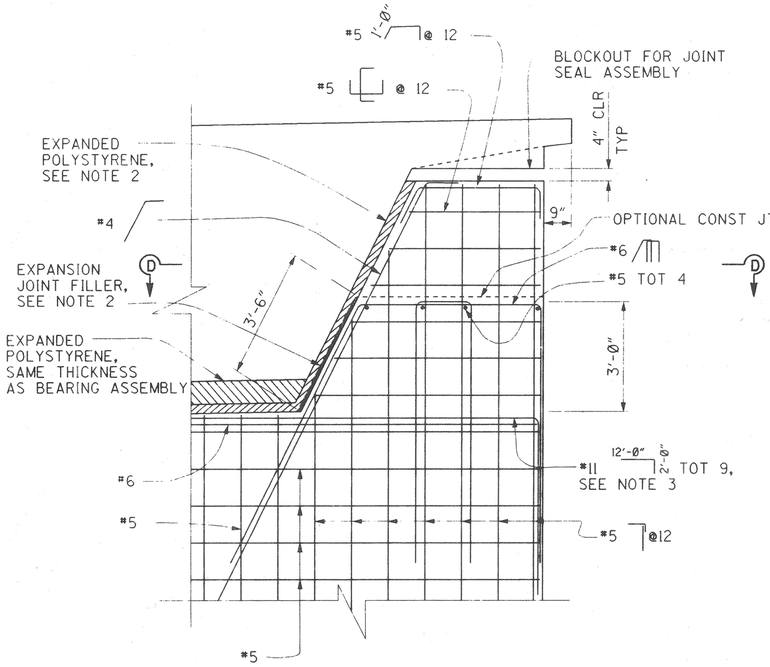

PART ELEVATION

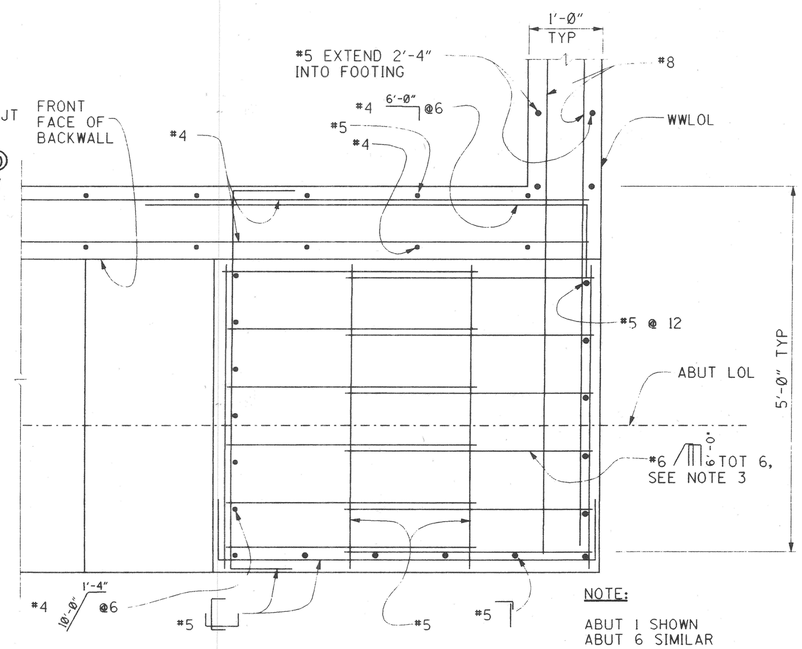

NOTE:

ABUT 1 SHOWN
ABUT 6 SIMILAR

SECTION D-D

EXTERNAL SHEAR KEY

1"=1'-0"

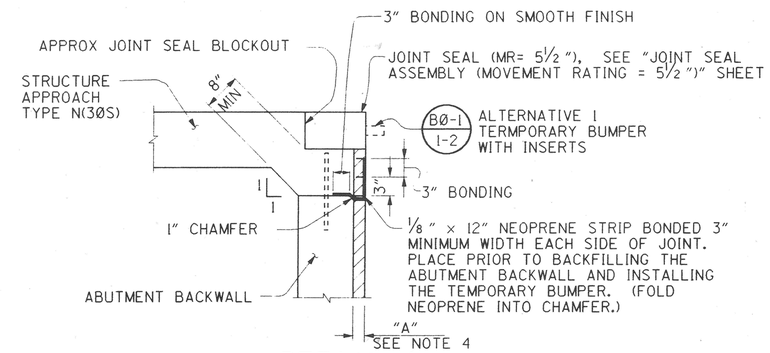

DETAIL A

NO SCALE

NOTES:

1. FOR DETAILS NOT SHOWN SEE "ABUTMENT DETAILS NO. 1,2, & 4" SHEETS.
2. 3" EXPANDED POLYSTRENE INCLUDING 1/2" EXPANSION JOINT FILLER.
3. BEGIN SPACING REINFORCEMENT AT THE FRONT FACE OF THE BACKWALL.
4. USE DIMENSION "A" SHOWN ON "JOINT SEAL ASSEMBLY" SHEET FOR EXPANSION JOINT THICKNESS.

DR. 3 (16158)
Sheet 58 Of 126

1 1/2 0 1 2
3 inches on original drawing

MARK	DATE	DESCRIPTION

REVISIONS

PREPARED UNDER RESPONSIBLE CHARGE OF:

REGISTERED PROFESSIONAL ENGINEER Richard A. Hart NO. C 039595 EXP. 12-31-97 CIVIL STATE OF CALIFORNIA 9/29/96

RICHARD A. HART DATE
RCE 39595 (EXP. 12-31-97)

PLANS PREPARED BY:
HNTB
26 EXECUTIVE PARK
SUITE 200
IRVINE, CALIFORNIA 92614

ORANGE COUNTY
ENVIRONMENTAL MANAGEMENT AGENCY

ANTONIO PARKWAY
BRIDGE OVER
SAN JUAN CREEK

ABUTMENT DETAILS NO. 3

10/27

DESIGNED Steve A. Whitaker
DRAWN L. West
CHECKED R. Hart
SCALE AS SHOWN
DATE
DRAWING NO.
SHEET 58 OF 126

DR 3 (16158)

Design Filename: pt24897.cadd\ca-toab3.dgn
Plotted on: 25-SEP-1996 08:53 Generated by: SWhitaker

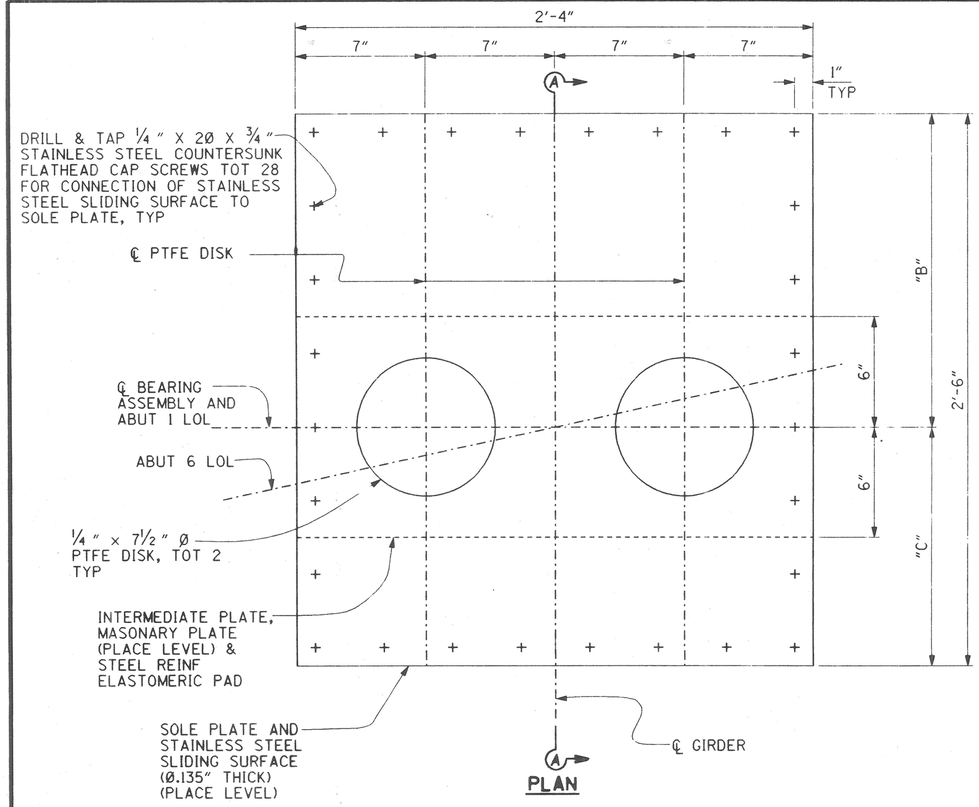

PLAN

DESIGN VALUES

MAXIMUM VERTICAL LOAD (KIPS PER ASSEMBLY)	MINIMUM VERTICAL LOAD (KIPS PER ASSEMBLY)
260	207

SOLE PLATE PLACEMENT

LOCATION	"B" DIMENSION			"C" DIMENSION		
	WINT	SUMM	SPR/FALL	WINT	SUMM	SPR/FALL
ABUTMENT 1	1'-7 1/4"	1'-5"	1'-6"	10 3/4"	1'-1"	1'-0"
ABUTMENT 6	1'-7 1/4"	1'-5"	1'-6"	10 3/4"	1'-1"	1'-0"

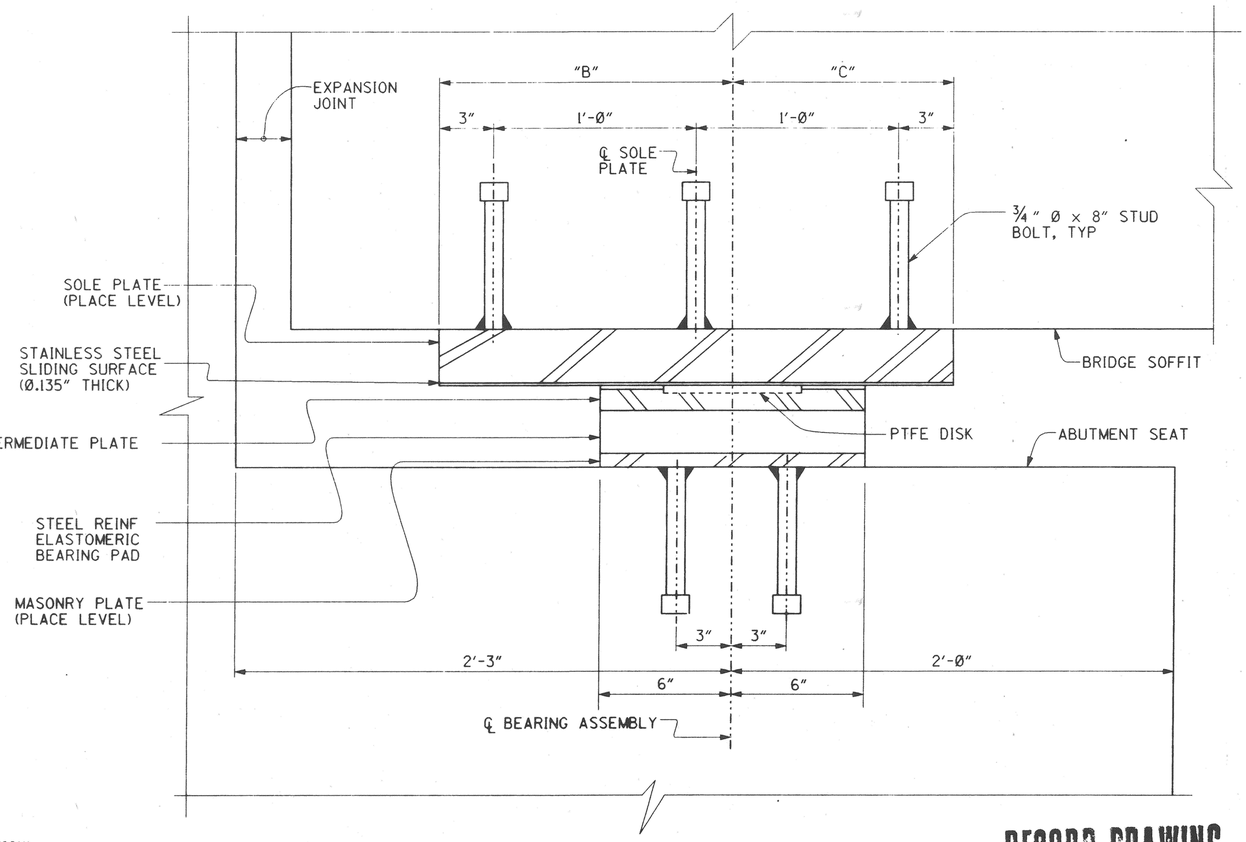

SECTION A-A

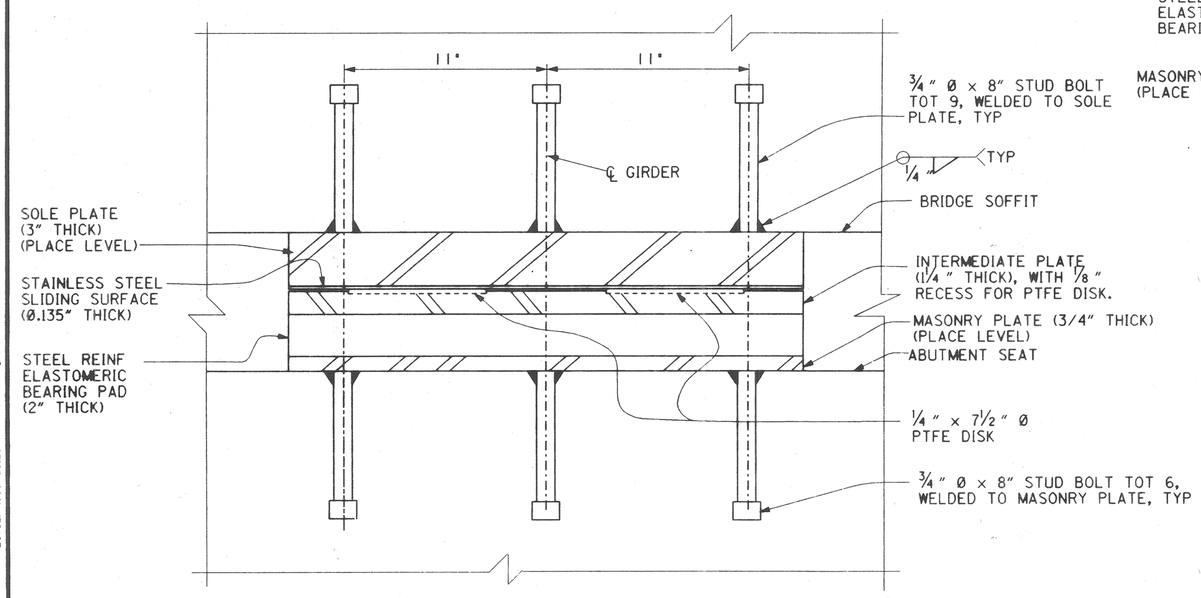

ELEVATION

ELASTOMERIC/PTFE BEARING ASSEMBLY

3"=1'-0"

RECORD DRAWING

DR. 3 (16158)
Sheet 59 Of 126

1/2 0 1 2
3 inches on original drawing

MARK	DATE	DESCRIPTION

REVISIONS

PREPARED UNDER RESPONSIBLE CHARGE OF:

RICHARD A. HART
RCE 39596 (EXP. 12-31-97)
DATE 9/20/96

PLANS PREPARED BY:
HNTB
26 EXECUTIVE PARK
SUITE 200
IRVINE, CALIFORNIA 92614

ORANGE COUNTY
ENVIRONMENTAL MANAGEMENT AGENCY

ANTONIO PARKWAY
BRIDGE OVER
SAN JUAN CREEK

ABUTMENT DETAILS NO. 4

11/27

DESIGNED Steve A. Whitaker
DRAWN L. West
CHECKED R. Hart
SCALE AS SHOWN
DATE
DRAWING NO.
SHEET 59 OF 126

DR. 8 (16158)

Design Filename: p:\24897\cadd\antoab4.dgn
Plotted on: 20-SEP-1996 09:20 Generated by: WLI

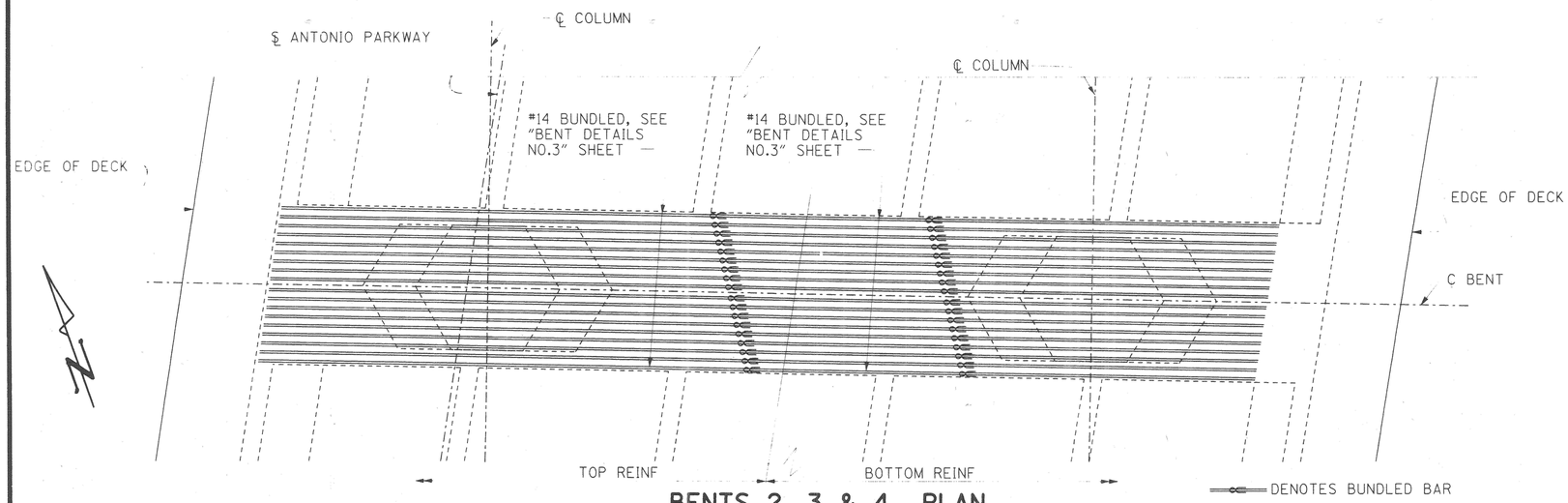

BENTS 2, 3 & 4 PLAN

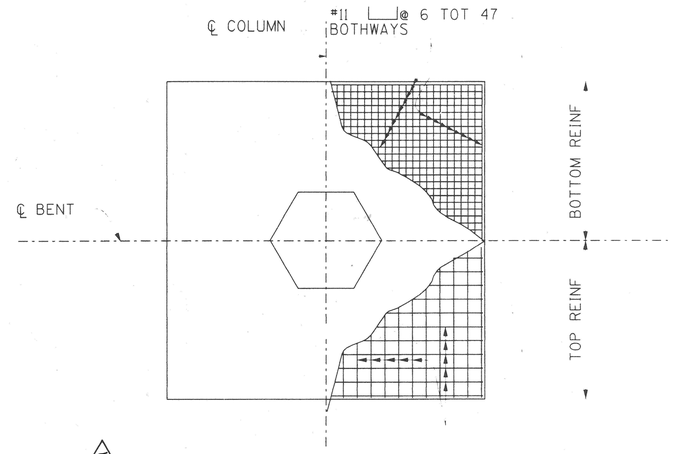

BENTS 2, 3 & 4 FOOTING REINFORCEMENT

3/16"=1'-0"

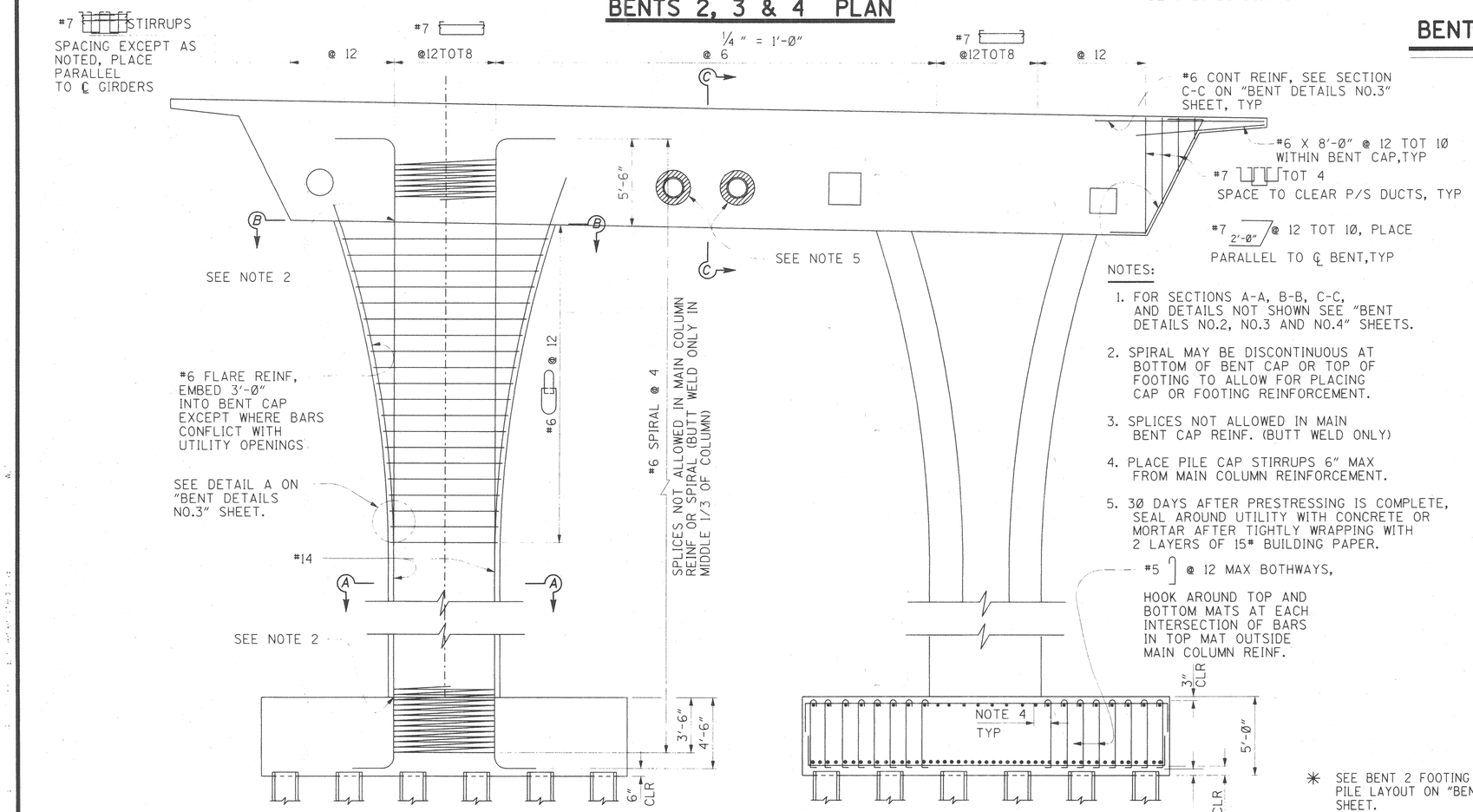

BENTS 2*, 3 & 4 ELEVATION

1/4"=1'-0"

NOTES:

1. FOR SECTIONS A-A, B-B, C-C, AND DETAILS NOT SHOWN SEE "BENT DETAILS NO.2, NO.3 AND NO.4" SHEETS.
2. SPIRAL MAY BE DISCONTINUOUS AT BOTTOM OF BENT CAP OR TOP OF FOOTING TO ALLOW FOR PLACING CAP OR FOOTING REINFORCEMENT.
3. SPLICES NOT ALLOWED IN MAIN BENT CAP REINF. (BUTT WELD ONLY)
4. PLACE PILE CAP STIRRUPS 6" MAX FROM MAIN COLUMN REINFORCEMENT.
5. 30 DAYS AFTER PRESTRESSING IS COMPLETE, SEAL AROUND UTILITY WITH CONCRETE OR MORTAR AFTER TIGHTLY WRAPPING WITH 2 LAYERS OF 15# BUILDING PAPER.

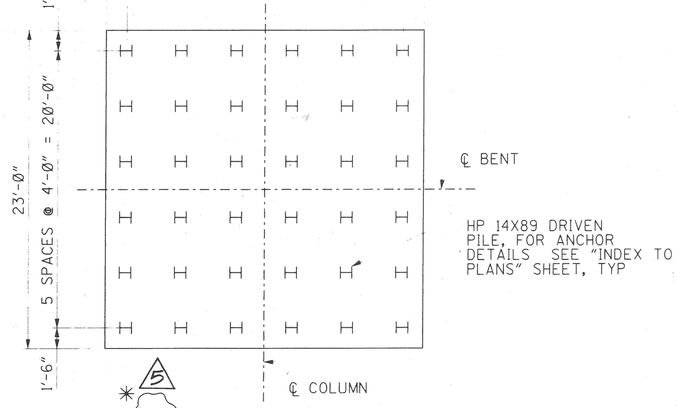

BENTS 2*, 3 & 4 PILE LAYOUT

3/16"=1'-0"

* SEE BENT 2 FOOTING REINFORCEMENT & PILE LAYOUT ON "BENT DETAILS NO. 4" SHEET.

RECORD DRAWING

1/2 0 1 2
3 inches on original drawing

PLANS PREPARED BY: HNTB, 36 EXECUTIVE PARK, SUITE 200, IRVINE, CALIFORNIA 92614

MARK	DATE	DESCRIPTION
5	10/97	ADDITION OF CIDH @ BENT 2

REVISIONS

PREPARED UNDER RESPONSIBLE CHARGE OF: RICHARD A. HART, RCE 39595 (EXP. 12-31-97) — REGISTERED PROFESSIONAL ENGINEER, No. C 039595, EXP. 12-31-97, CIVIL, STATE OF CALIFORNIA — DATE 12/24/97

ORANGE COUNTY ENVIRONMENTAL MANAGEMENT AGENCY

ANTONIO PARKWAY BRIDGE OVER SAN JUAN CREEK

BENT DETAILS NO.1

J DR-3 (16158)
Sheet 60 OF 126

12/27

DESIGNED Steve A. Whitaker		SHEET
DRAWN L. West	CHECKED R. Hart	60
SCALE AS SHOWN	DATE	DRAWING NO. OF 126

DR-3 (16158)

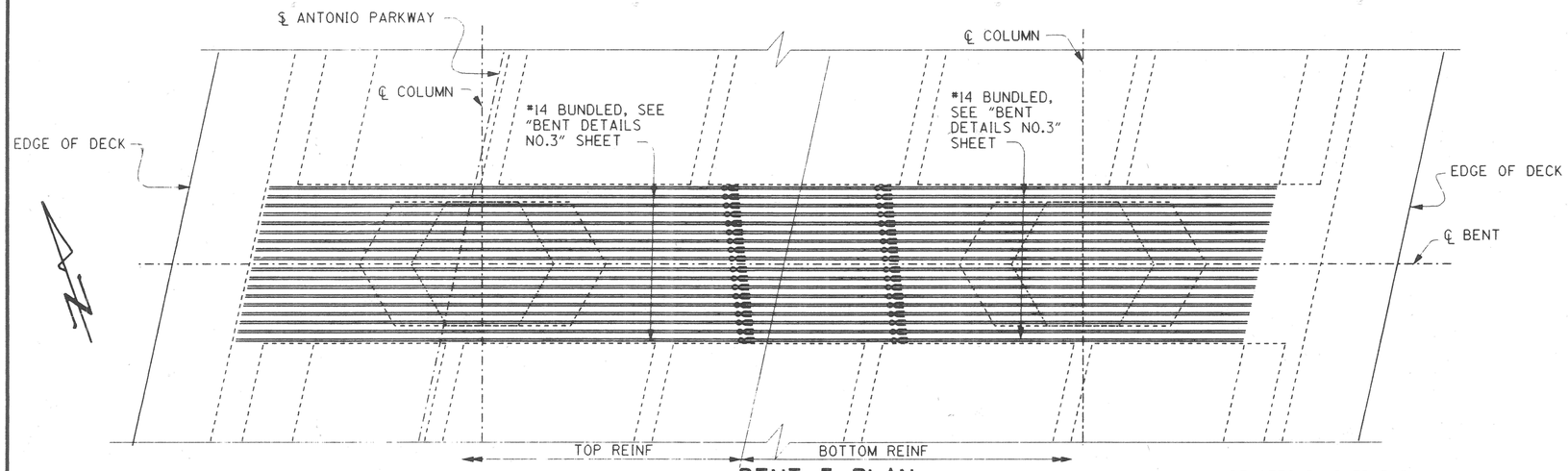

BENT 5 PLAN

1/4 "=1'-0"

DENOTES BUNDLED BAR

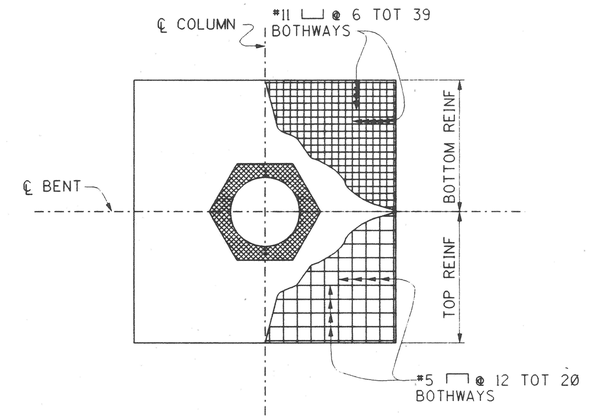

BENT 5 FOOTING REINFORCEMENT

3/16"=1'-0"

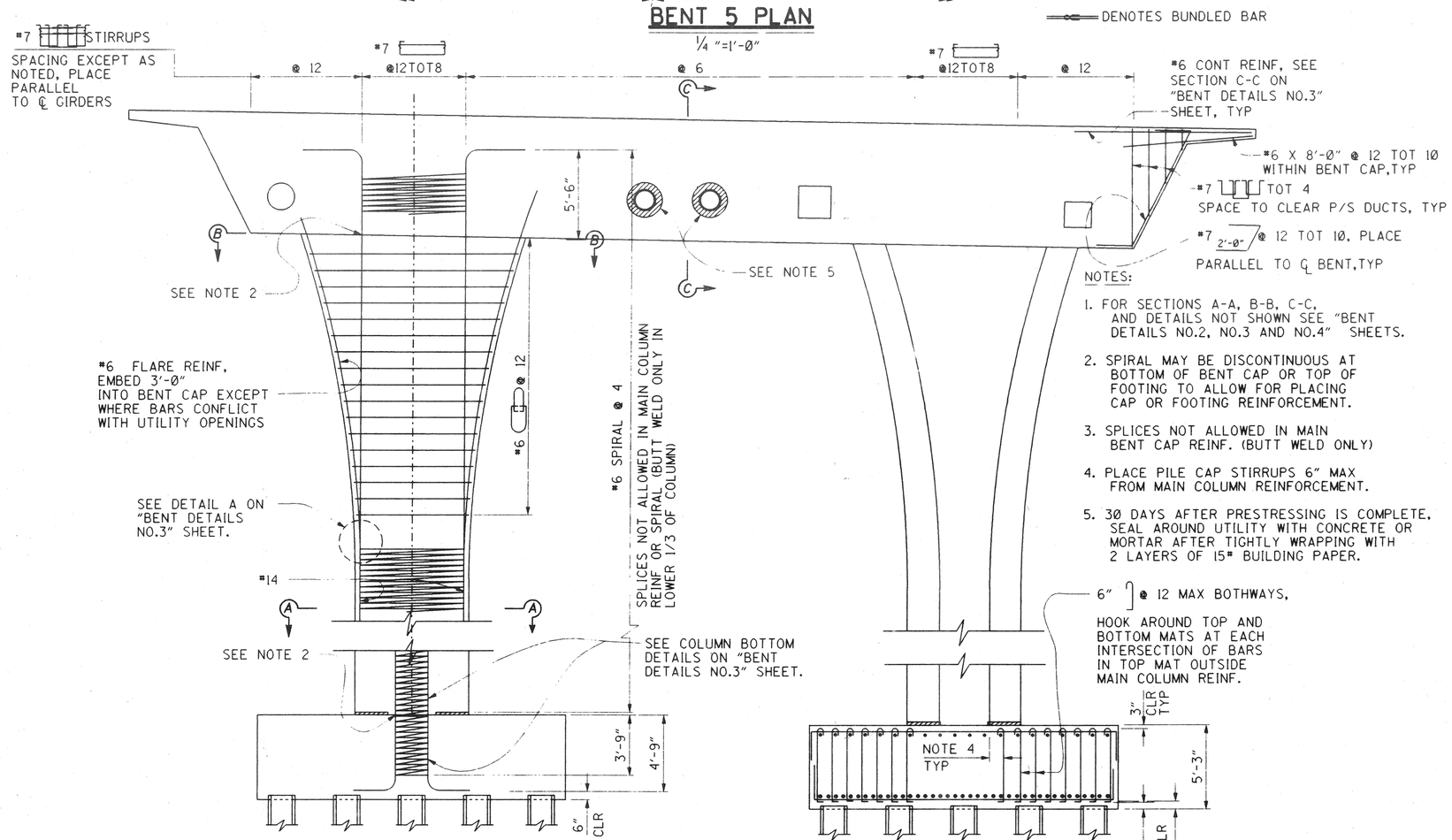

BENT 5 ELEVATION

1/4 "=1'-0"

NOTES:

1. FOR SECTIONS A-A, B-B, C-C, AND DETAILS NOT SHOWN SEE "BENT DETAILS NO.2, NO.3 AND NO.4" SHEETS.
2. SPIRAL MAY BE DISCONTINUOUS AT BOTTOM OF BENT CAP OR TOP OF FOOTING TO ALLOW FOR PLACING CAP OR FOOTING REINFORCEMENT.
3. SPLICES NOT ALLOWED IN MAIN BENT CAP REINF. (BUTT WELD ONLY)
4. PLACE PILE CAP STIRRUPS 6" MAX FROM MAIN COLUMN REINFORCEMENT.
5. 30 DAYS AFTER PRESTRESSING IS COMPLETE, SEAL AROUND UTILITY WITH CONCRETE OR MORTAR AFTER TIGHTLY WRAPPING WITH 2 LAYERS OF 15# BUILDING PAPER.

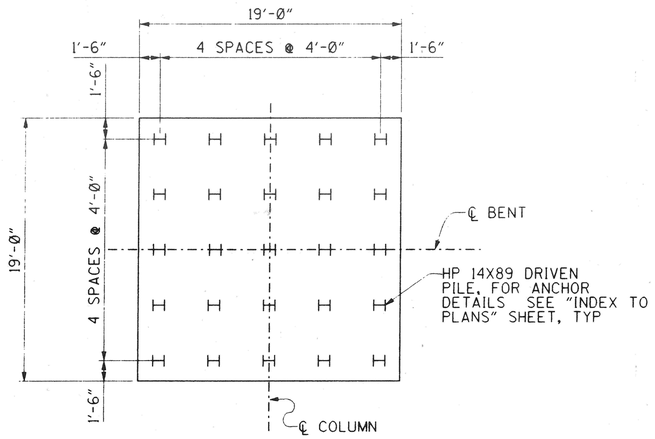

BENT 5 PILE LAYOUT

3/16"=1'-0"

DR. 3 (16158)
Sheet 61 Of 126

RECORD DRAWING

1 1/2 0 1 2
3 Inches on original drawing

PLANS PREPARED BY: HNTB
36 EXECUTIVE PARK
SUITE 200
IRVINE, CALIFORNIA 92614

MARK	DATE	DESCRIPTION

REVISIONS

PREPARED UNDER RESPONSIBLE CHARGE OF:
Richard A. Hart
REGISTERED PROFESSIONAL ENGINEER
NO. C 039595
EXP. 12-31-97
CIVIL
STATE OF CALIFORNIA
10/8/96
DATE
RICHARD A. HART
RCE 39595 (EXP. 12-31-97)

ORANGE COUNTY
ENVIRONMENTAL MANAGEMENT AGENCY

ANTONIO PARKWAY
BRIDGE OVER
SAN JUAN CREEK

BENT DETAILS NO. 2

13/27

DESIGNED Steve A. Whitaker		SHEET
DRAWN L. West	CHECKED R. Hart	61
SCALE AS SHOWN	DATE	DRAWING NO.	OF 126

DR. 3 (16158)

Design Filename: J:\24897\cadd\antonio2.dgn
Plotted On: 17-OCT-1996 16:41 Generated By: SWhitaker

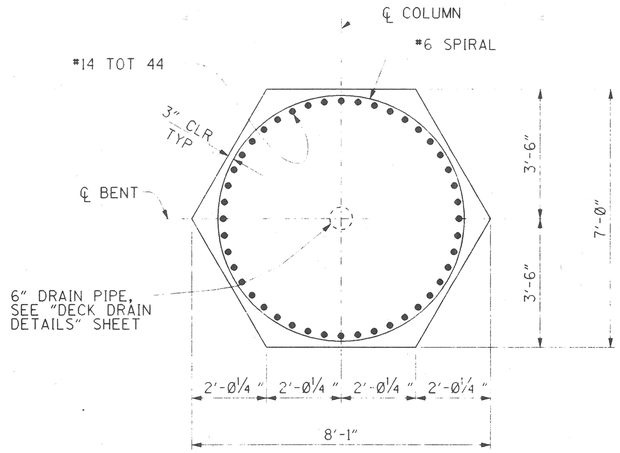

SECTION A-A

½" = 1'-0"

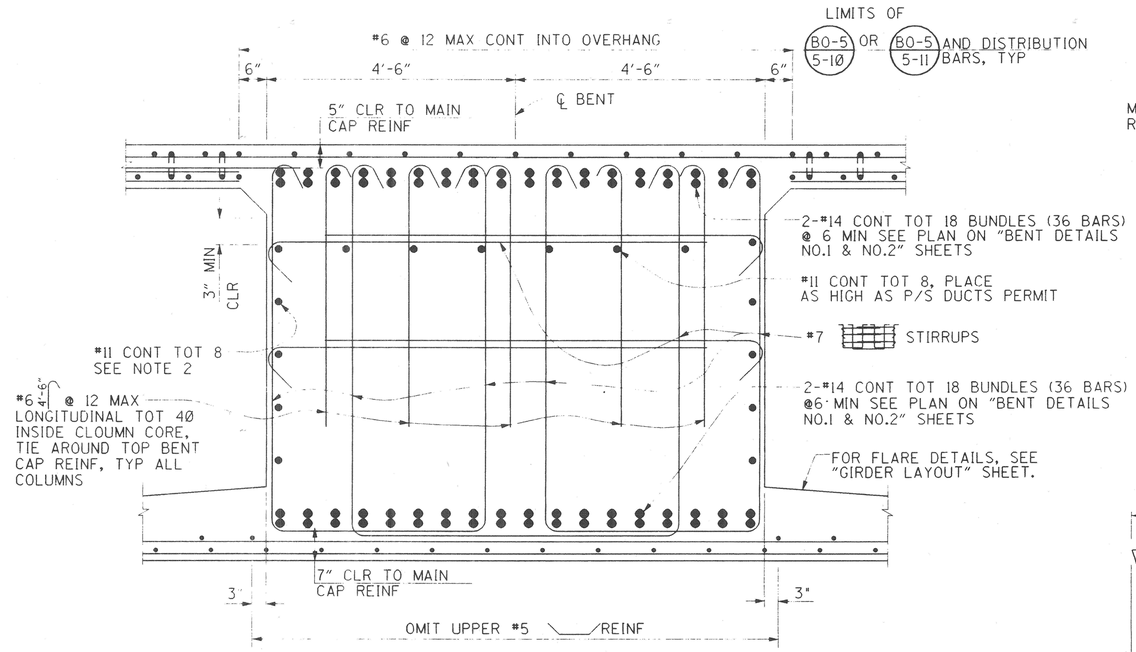

SECTION C-C

3/4" = 1'-0"

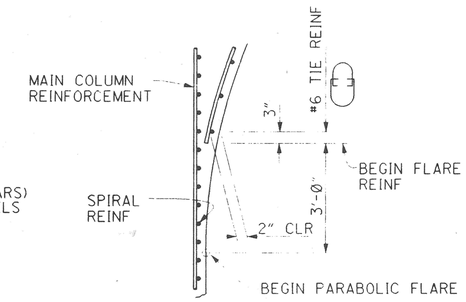

DETAIL A

NO SCALE

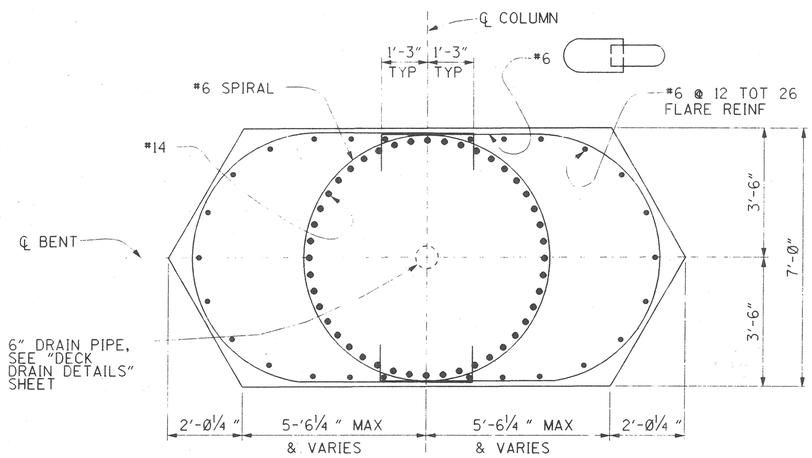

SECTION B-B

½" = 1'-0"

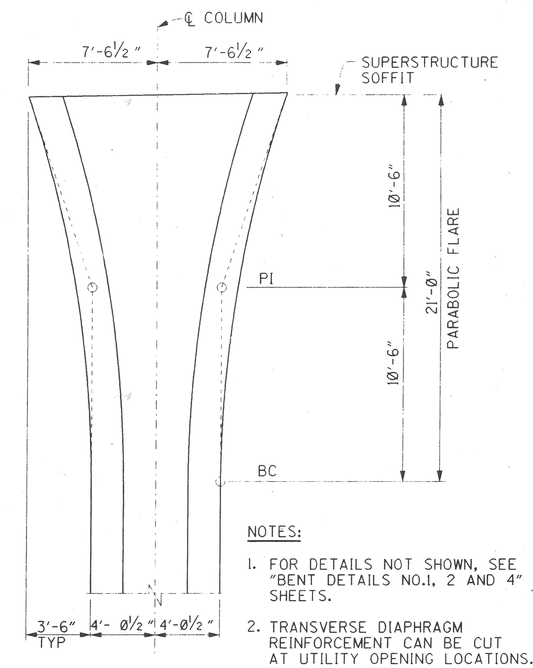

NOTES:

1. FOR DETAILS NOT SHOWN, SEE "BENT DETAILS NO.1, 2 AND 4" SHEETS.
2. TRANSVERSE DIAPHRAGM REINFORCEMENT CAN BE CUT AT UTILITY OPENING LOCATIONS.

COLUMN GEOMETRICS

NO SCALE

DR. 3 (16158)
Sheet 62 Of 126

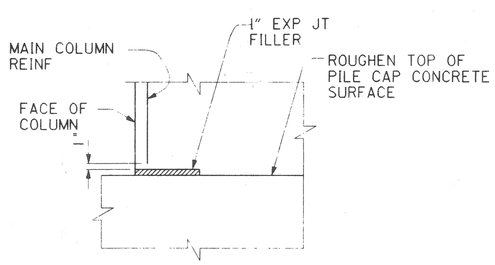

BENT 5 PARTIAL ELEVATION

NO SCALE

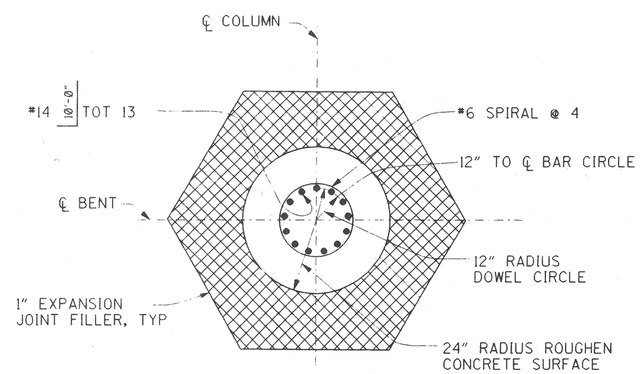

PLAN

BENT 5 COLUMN BOTTOM DETAILS

NO SCALE

1 ½ 0 1 2
3 Inches on original drawing

PLANS PREPARED BY:
HNTB
36 EXECUTIVE PARK
SUITE 200
IRVINE, CALIFORNIA 92614

MARK	DATE	DESCRIPTION

REVISIONS

PREPARED UNDER RESPONSIBLE CHARGE OF:
REGISTERED PROFESSIONAL ENGINEER Richard A. Hart NO. C 039595 EXP. 12-31-97 CIVIL STATE OF CALIFORNIA
9/20/96
RICHARD A. HART
RCE 39595 (EXP. 12-31-97)
DATE

ORANGE COUNTY
ENVIRONMENTAL MANAGEMENT AGENCY

ANTONIO PARKWAY
BRIDGE OVER
SAN JUAN CREEK

BENT DETAILS NO.3

14/27

DESIGNED Steve A. Whitaker		SHEET
DRAWN L. West	CHECKED R. Hart	62
SCALE AS SHOWN	DATE	DRAWING NO.
		OF 126

DR 3 (16158)

Design File(s): 20-SEP-1996 09:32 Oc-Ne-Ant-Ab13.dgn
Plot Date: 20-SEP-1996 Plotted By: SWhitaker

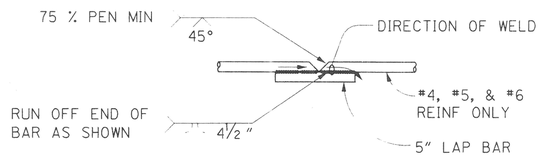

1. BUTT WELD TO BE MADE FIRST.
2. BUTT WELD TO BE MADE IN FLAT OR HORIZ POSITION.
3. LAP BAR TO BE CENTERED ON SPLICE.
4. FLARE WELD TO BE MADE IN DIRECTION SHOWN.
5. LAP BAR EQUAL SIZE TO SPIRAL BAR.

VEE GROOVE WELDED SPLICE

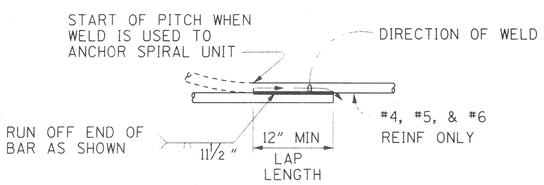

NOTE:

FLARE WELD TO BE MADE IN DIRECTION SHOWN

WELDED LAP SPLICE AND ANCHOR

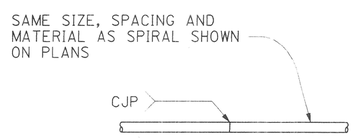

INDIVIDUAL HOOPS, MADE CONTINUOUS WITH 100% PENETRATION WELDS, MAY BE SUBSTITUTED FOR SPIRALS.

BUTT WELDED CONTINUOUS HOOP

BAR SPIRAL SPLICE & SPIRAL ANCHOR AND HOOP DETAIL

NO SCALE

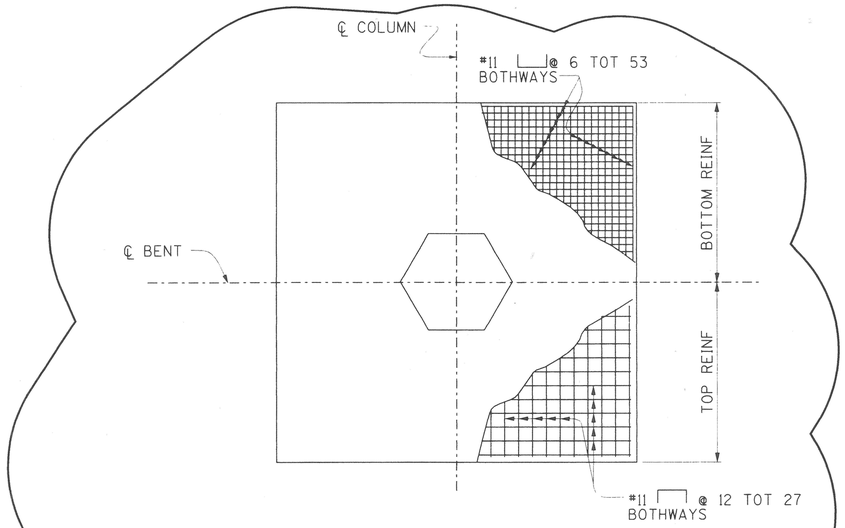

BENTS 2 FOOTING REINFORCEMENT

3/16"=1'-0"

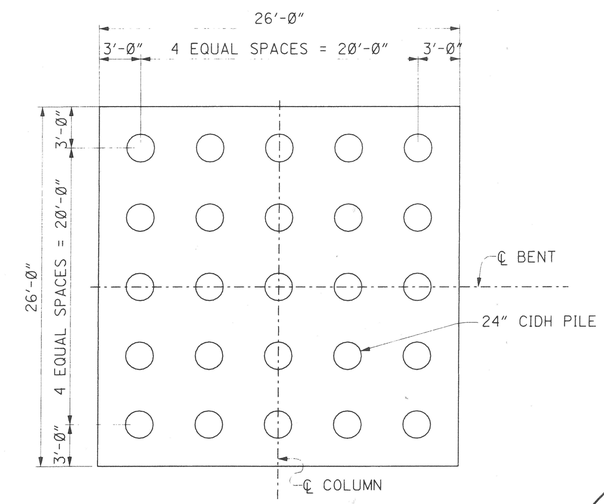

BENTS 2 PILE LAYOUT

3/16"=1'-0"

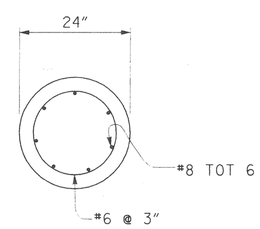

24" CIDH PILE SECTION

NTS

PILE LENGTH = 29.0'

5

RECORD DRAWING

1/2 0 1 2

3 inches on original drawing

MARK	DATE	DESCRIPTION
5	10/97	ADDITION OF CIDH @ BENT 2

REVISIONS

PREPARED UNDER RESPONSIBLE CHARGE OF:

REGISTERED PROFESSIONAL ENGINEER — Richard A. Hart — Reg. No. C 039595 — Exp. 12-31-97 — CIVIL — STATE OF CALIFORNIA

RICHARD A. HART — RCE 39595 (EXP. 12-31-97) — 10/24/97 — DATE

PLANS PREPARED BY:

HNTB — 36 EXECUTIVE PARK, SUITE 200, IRVINE, CALIFORNIA 92614

ORANGE COUNTY
ENVIRONMENTAL MANAGEMENT AGENCY

ANTONIO PARKWAY
BRIDGE OVER
SAN JUAN CREEK

BENT DETAILS NO.4

DR. -3 (16158)
Sheet 63 OF 126

15/27

DESIGNED Steve A. Whitaker		SHEET
DRAWN L. West	CHECKED R. Hart	63
SCALE AS SHOWN	DATE	DRAWING NO.	OF 126

DR.-3 (16158)

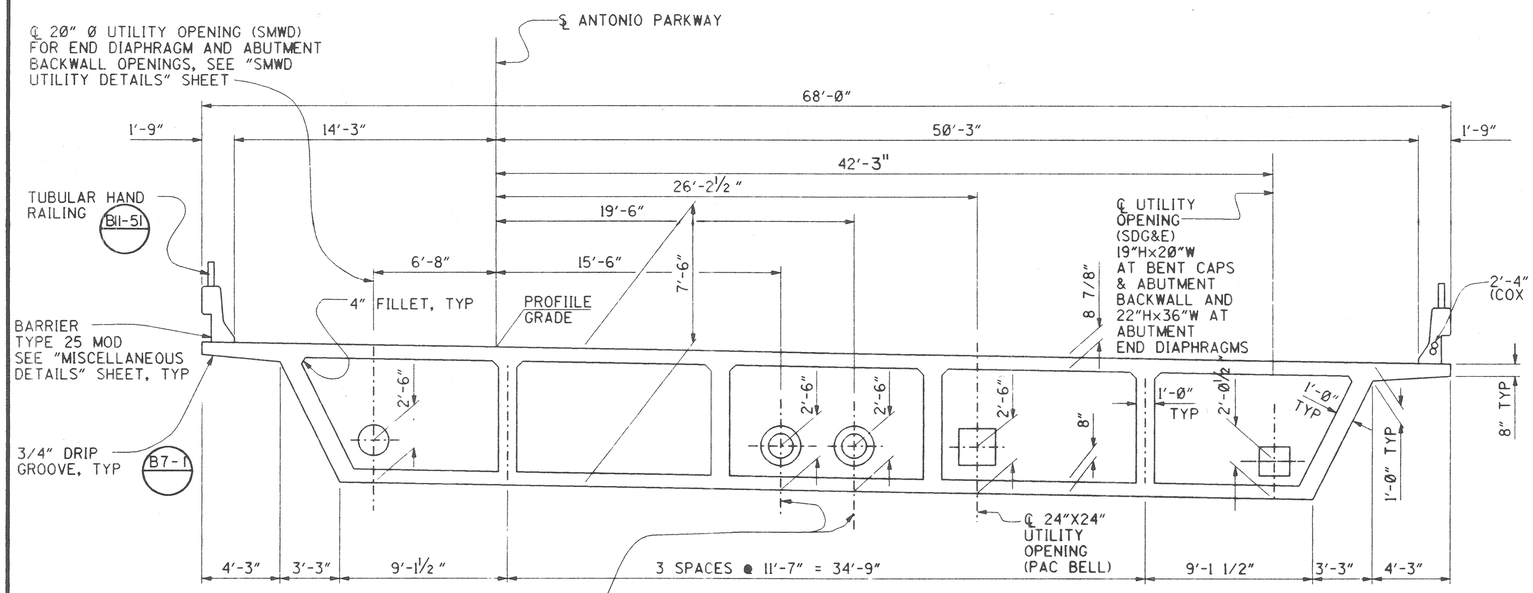

TYPICAL SECTION

1/4"=1'-0"

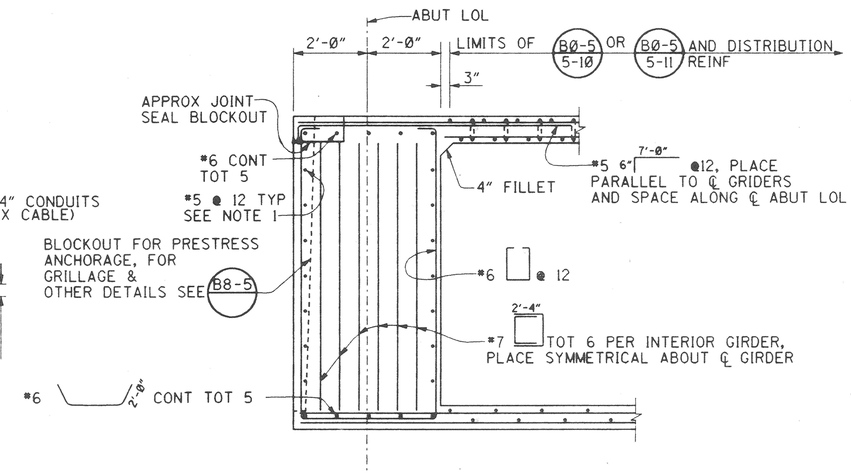

END DIAPHRAGM B8-5

½" = 1'-0"

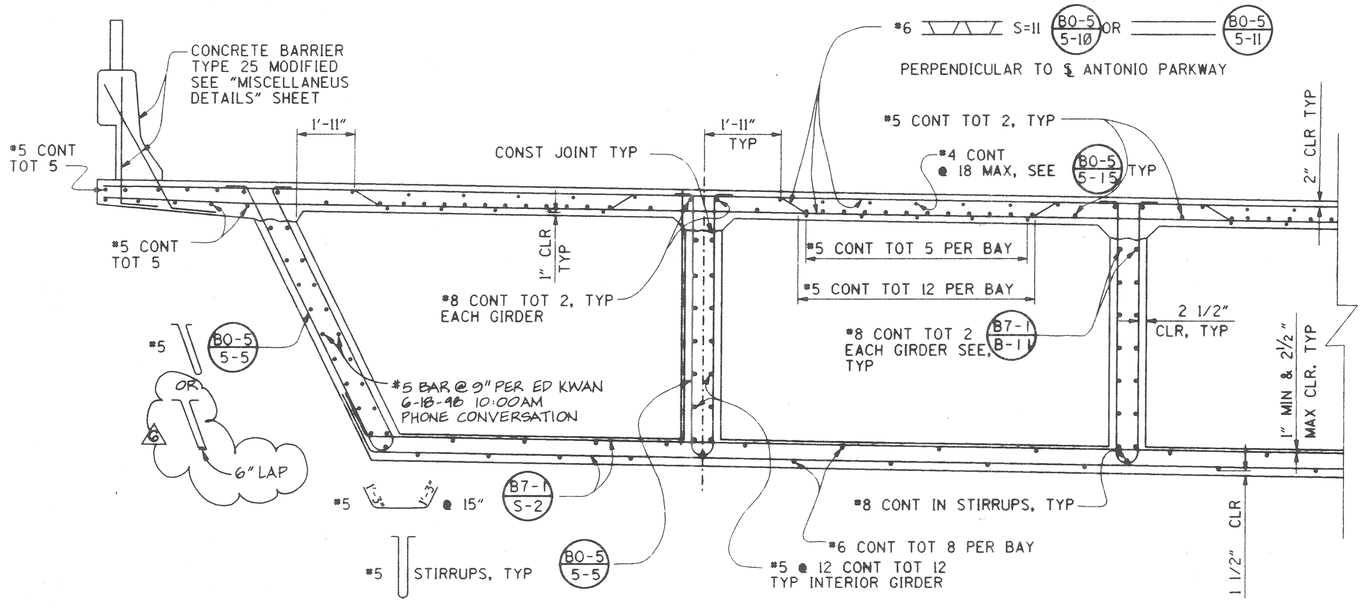

PART TYPICAL SECTION

½" =1'-0"

B0-5 5-5 B0-5 5-10 B0-5 5-11 B0-5 5-15 B7-1 B-1 B7-1 S-2

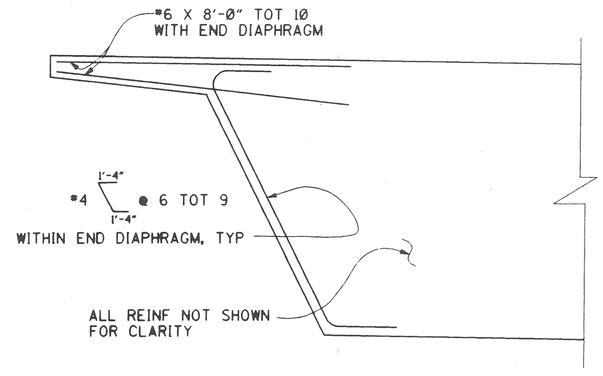

END DIAPHRAGM FACIA

½" =1'-0"

NOTES:

1. TRANSVERSE DIAPHRAGM REINFORCEMENT CONFLICTING WITH UTILITY OPENING LOCATIONS CAN BE CUT.

DR. 3 (16158)
Sheet 64 Of 126

RECORD DRAWING

1 ½ 0 1 2
3 Inches on original drawing

MARK	DATE	DESCRIPTION
G	10/99	AS BUILT SHOWN

REVISIONS

PREPARED UNDER RESPONSIBLE CHARGE OF:
RICHARD A. HART
RCE 38896 (EXP. 12-31-97)
DATE 10/6/96

PLANS PREPARED BY:
HNTB
36 EXECUTIVE PARK
SUITE 200
IRVINE, CALIFORNIA 92614

ORANGE COUNTY
ENVIRONMENTAL MANAGEMENT AGENCY

ANTONIO PARKWAY
BRIDGE OVER
SAN JUAN CREEK

TYPICAL SECTION

16/27

DESIGNED Steve A. Whitaker
DRAWN L. West
CHECKED R. Hart
SCALE AS SHOWN
DATE
DRAWING NO.
SHEET 64 OF 126

Dr 3 (16158)

Design Filename: p:\24897\cadd\antotsl.dgn
Plotted on: 07-OCT-1996 17:23 Generated by: Swhitaker

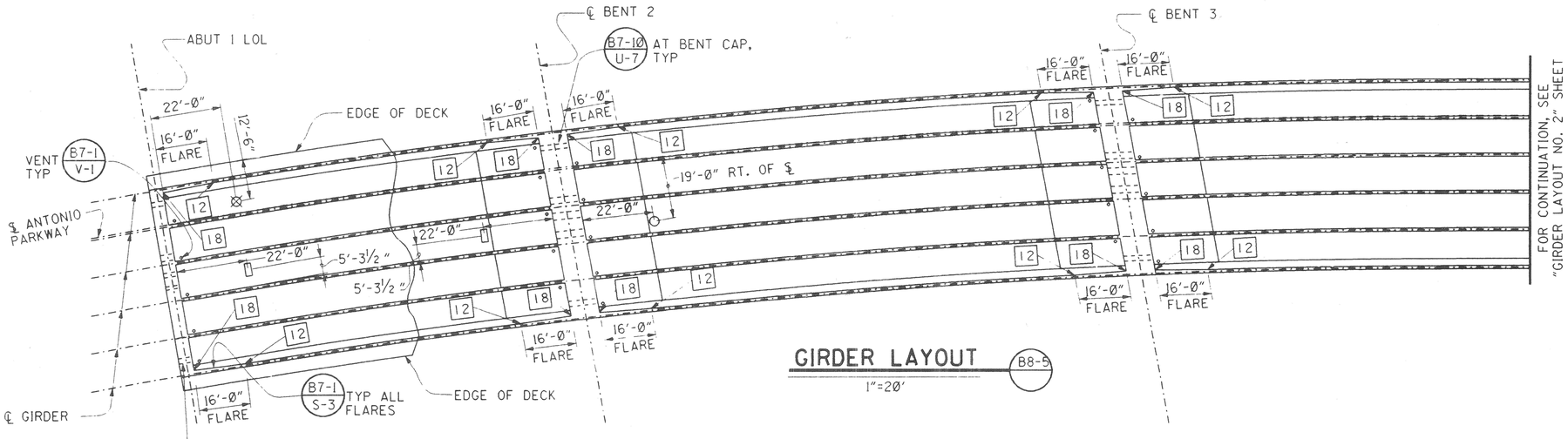

GIRDER LAYOUT (B8-5)

1"=20'

PRESTRESSING NOTES:

270 ksi LOW RELAXATION STRAND:
Pjack = 12,600 kips
ANCHOR SET = 3/8 IN
TOTAL NUMBER OF GIRDERS = 6

DISTRIBUTION OF FINAL PRESTRESS FORCE (Pjack) BETWEEN GIRDERS SHALL NOT EXCEED THE RATIO OF 3:2. MAXIMUM FINAL FORCE VARIATION BETWEEN GIRDERS SHALL NOT EXCEED 725 kips.

CONCRETE f'c = 4,000 psi AT 28 DAYS
f'ci = 3,500 psi AT TIME OF STRESSING

CONTRACTOR SHALL SUBMIT ELONGATION CALCULATIONS BASED ON INITIAL STRESS AT ⊠ = 0.829 TIMES JACKING STRESS.

BOTH END STRESSING SHALL BE PERFORMED.

FOR PRESTRESSING DETAILS NOT SHOWN, SEE (B8-5)

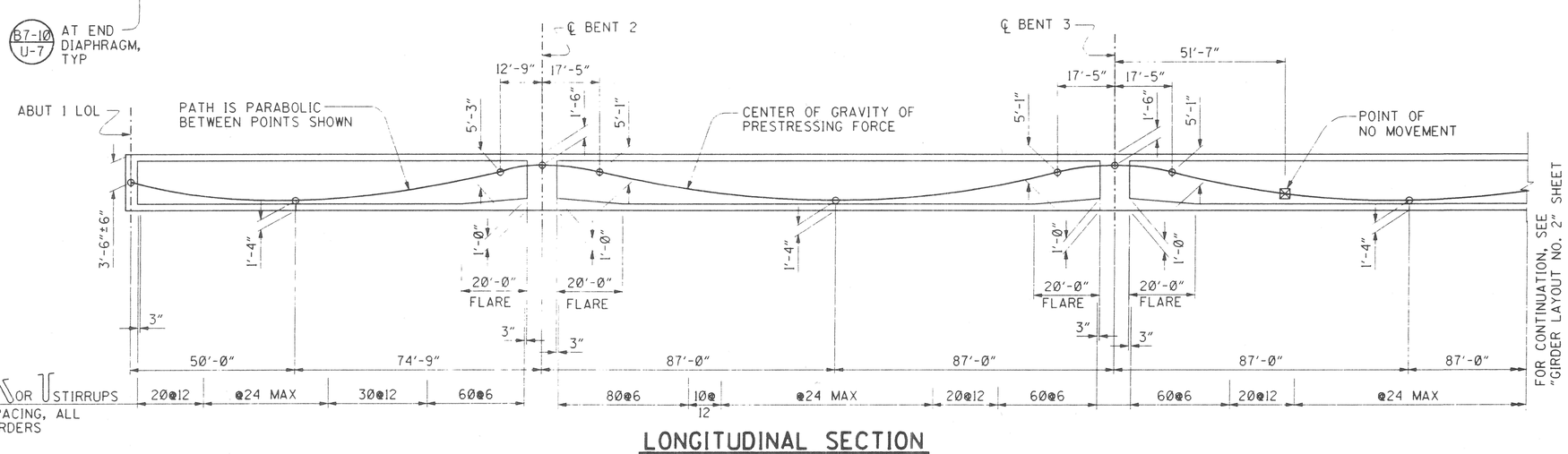

LONGITUDINAL SECTION

NO SCALE

LEGEND

□ = INDICATES GIRDER FLARE WIDTH IN INCHES, SEE (B7-1 S-3)

▭ = SOFFIT ACCESS OPENING SEE "MISCELLANEOUS DETAILS SHEET.

○ = MANHOLE DECK OPENING (B7-11) COVER SHALL BE STAMPED "SMWD", "WATER" PER SMWD STANDARD DRAWING S-1.

⊠ = SOFFIT ACCESS OPENING (CIRCULAR) (B14-5)

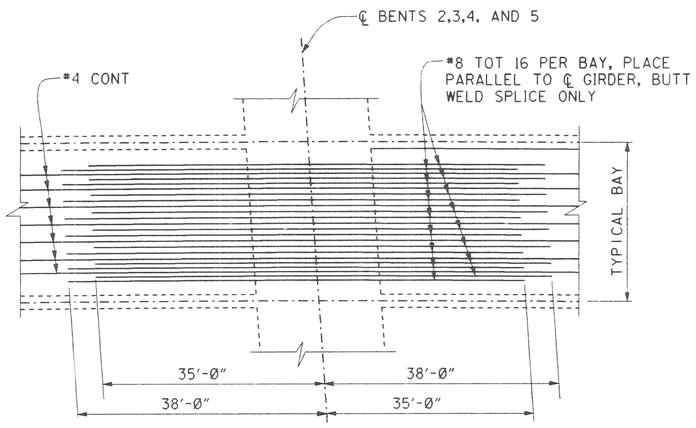

TOP LONGITUDINAL MILD REINFORCEMENT

NO SCALE

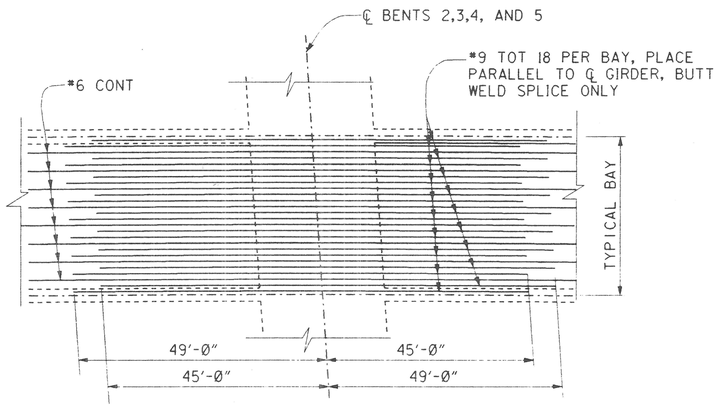

BOTTOM LONGITUDINAL MILD REINFORCEMENT

NO SCALE

RECORD DRAWING

DR. 3 (16158)
Sheet 65 Of 126

1 ½ 0 1 2
3 Inches on original drawing

PLANS PREPARED BY: HNTB, 36 EXECUTIVE PARK, SUITE 200, IRVINE, CALIFORNIA 92614

MARK	DATE	DESCRIPTION

REVISIONS

PREPARED UNDER RESPONSIBLE CHARGE OF: Richard A. Hart, REGISTERED PROFESSIONAL ENGINEER, NO. C 039595, EXP. 12-31-97, CIVIL, STATE OF CALIFORNIA — 10/9/96 DATE

RICHARD A. HART
RCE 39595 (EXP. 12-31-97)

ORANGE COUNTY
ENVIRONMENTAL MANAGEMENT AGENCY

ANTONIO PARKWAY
BRIDGE OVER
SAN JUAN CREEK

GIRDER LAYOUT NO. 1

17/27

DESIGNED Steve A. Whitaker		SHEET
DRAWN L. West	CHECKED R. Hart	65
SCALE AS SHOWN	DATE	DRAWING NO.	OF 126

Design Filename: p:\24897\cadd\antogil.dgn
Plotted on: 09-OCT-1996 15:34 Generated by: Swhitaker

DR. 3 (16158)

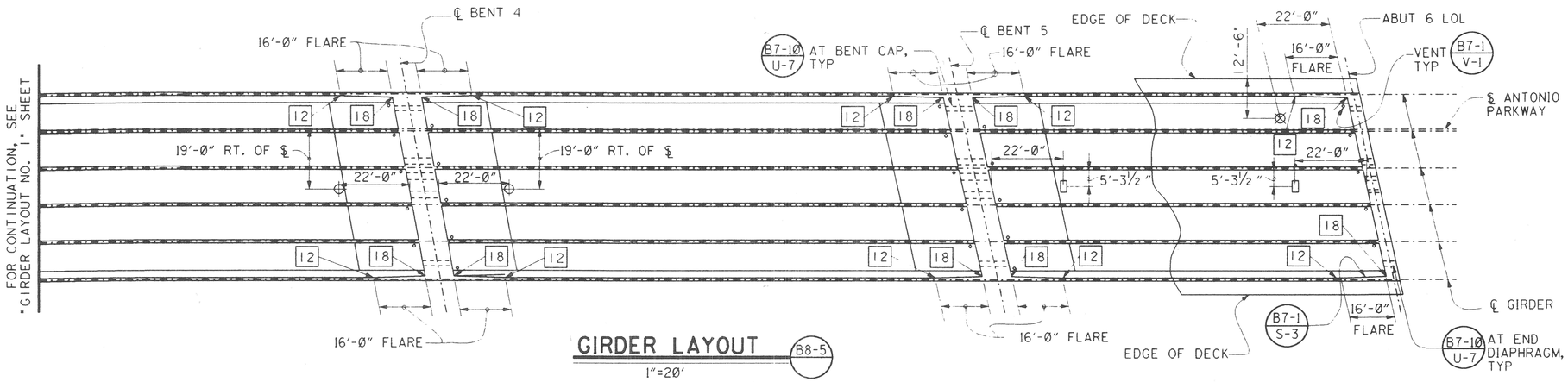

GIRDER LAYOUT

B8-5

1"=20'

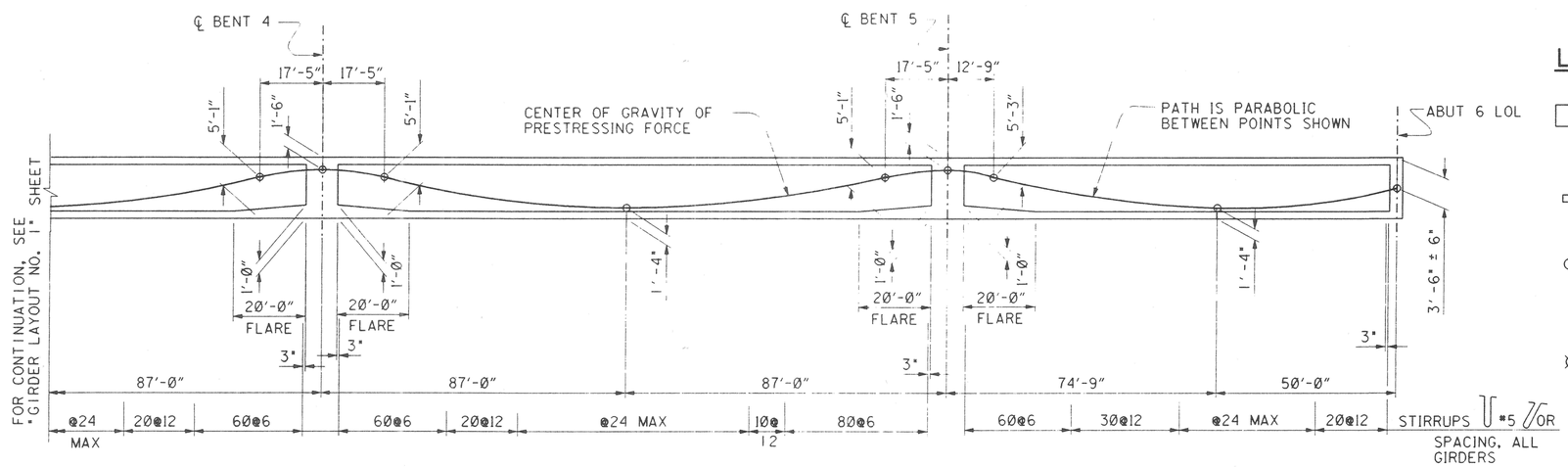

LONGITUDINAL SECTION

NO SCALE

LEGEND

☐ = INDICATES GIRDER FLARE WIDTH IN INCHES, SEE B7-1 S-3

▭ = SOFFIT ACCESS OPENING SEE "MISCELLANEOUS DETAILS SHEET.

○ = MANHOLE DECK OPENING B7-11 COVER SHALL BE STAMPED "SMWD", "WATER" PER SMWD STANDARD DRAWING S-1.

⊠ = SOFFIT ACCESS OPENING (CIRCULAR) B14-5

RECORD DRAWING

DR. 8 (16158)
Sheet 66 Of 126

½ 0 1 2
3 inches on original drawing

MARK	DATE	DESCRIPTION

REVISIONS

PREPARED UNDER RESPONSIBLE CHARGE OF:

Richard A. Hart
REGISTERED PROFESSIONAL ENGINEER
C 039595
EXP. 12-31-97
CIVIL
STATE OF CALIFORNIA
10/9/96
RICHARD A. HART — DATE
RCE 39595 (EXP. 12-31-97)

PLANS PREPARED BY:
HNTB
36 EXECUTIVE PARK
SUITE 200
IRVINE, CALIFORNIA 92614

ORANGE COUNTY
ENVIRONMENTAL MANAGEMENT AGENCY

ANTONIO PARKWAY
BRIDGE OVER
SAN JUAN CREEK

GIRDER LAYOUT NO. 2

18/27

DESIGNED Steve A. Whitaker		SHEET
DRAWN L. West	CHECKED R. Hart	66
SCALE AS SHOWN	DATE	DRAWING NO.	OF 126

DR. 3 (16158)

Design Filename: p:\24897\cadd\ontug2.dgn
Plotted on: 09-OCT-1996 15:24 Generated by: SWhitaker

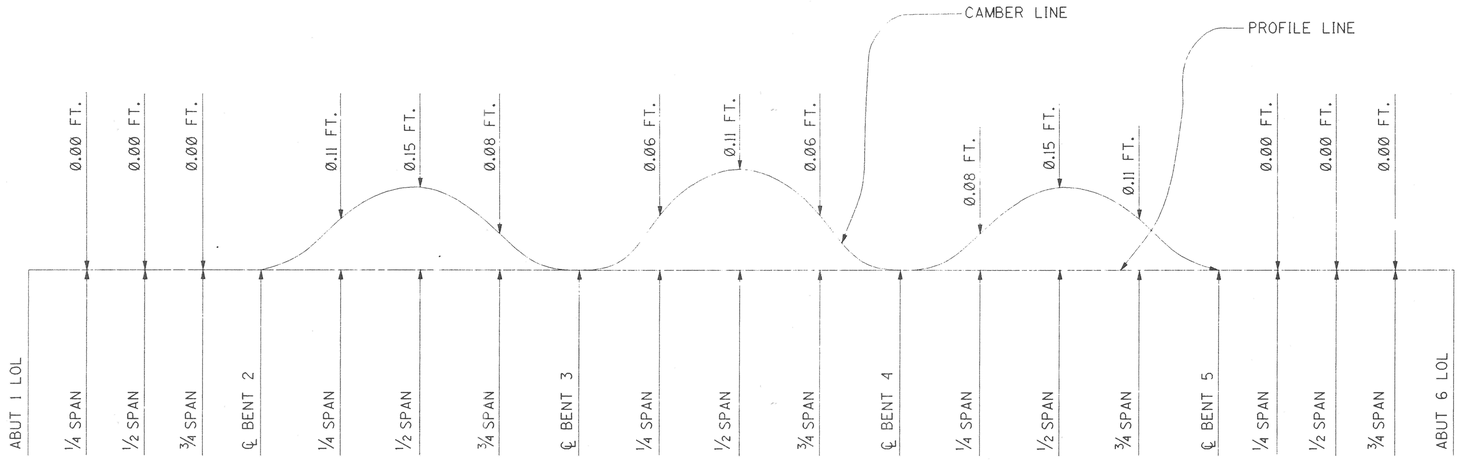

NOTE:

CAMBER LINE DOES NOT INCLUDE ALLOWANCE FOR FALSEWORK SETTLEMENT.

CAMBER DIAGRAM

NO SCALE

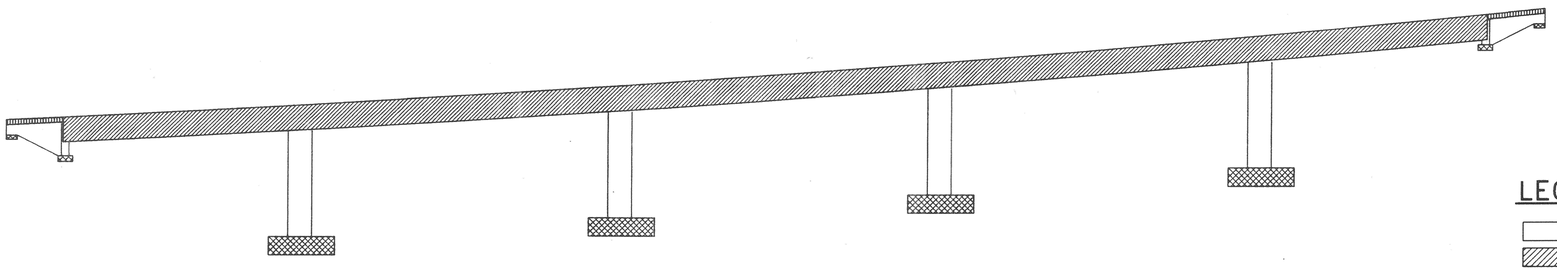

LEGEND

- = STRUCTURAL CONCRETE, BRIDGE (f'c=3,500 psi @ 28 DAYS)
- = STRUCTURAL CONCRETE, BRIDGE (f'c=4,000 psi @ 28 DAYS)
- = STRUCTURAL CONCRETE, BRIDGE FOOTING (f'c=3,500 psi @ 28 DAYS)
- = STRUCTURAL CONCRETE, APPROACH SLAB (TYPE N)

CONCRETE STRENGTH & TYPE LIMITS

NO SCALE

RECORD DRAWING

DR. 3 (16158)
Sheet 67 Of 126

1 1/2 0 1 2
3 inches on original drawing

MARK	DATE	DESCRIPTION

REVISIONS

PREPARED UNDER RESPONSIBLE CHARGE OF:

REGISTERED PROFESSIONAL ENGINEER — Richard A. Hart — NO. C 039595 — EXP. 12-31-97 — CIVIL — STATE OF CALIFORNIA

RICHARD A. HART
RCE 39595 (EXP. 12-31-97)

9/20/96
DATE

PLANS PREPARED BY:

HNTB

36 EXECUTIVE PARK
SUITE 200
IRVINE, CALIFORNIA 92614

ORANGE COUNTY
ENVIRONMENTAL MANAGEMENT AGENCY

ANTONIO PARKWAY
BRIDGE OVER
SAN JUAN CREEK

CAMBER DIAGRAM &
CONC STRENGTH &
TYPE LIMITS

19/27

DESIGNED Steve A. Whitaker		SHEET
DRAWN L. West	CHECKED R. Hart	67
SCALE AS SHOWN	DATE	DRAWING NO.	OF 126

DR. 3 (16158)

Design Filename: p:\24897\cadd\antogl3.dgn
Plotted On: 19-SEP-1996 15:45 Generated by: SWhitaker

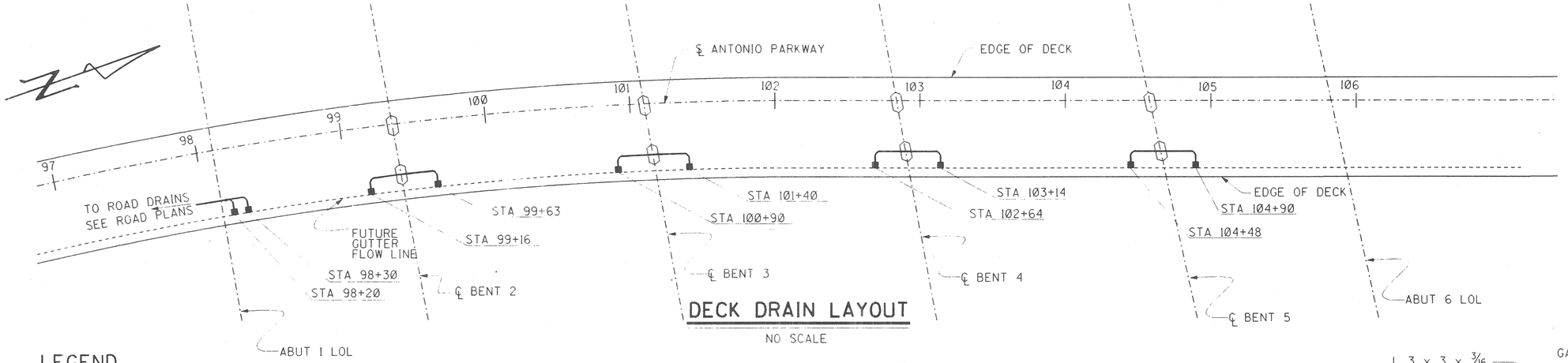

DECK DRAIN LAYOUT

NO SCALE

LEGEND

■ = DECK DRAIN TYPE D-1 (B7-6)

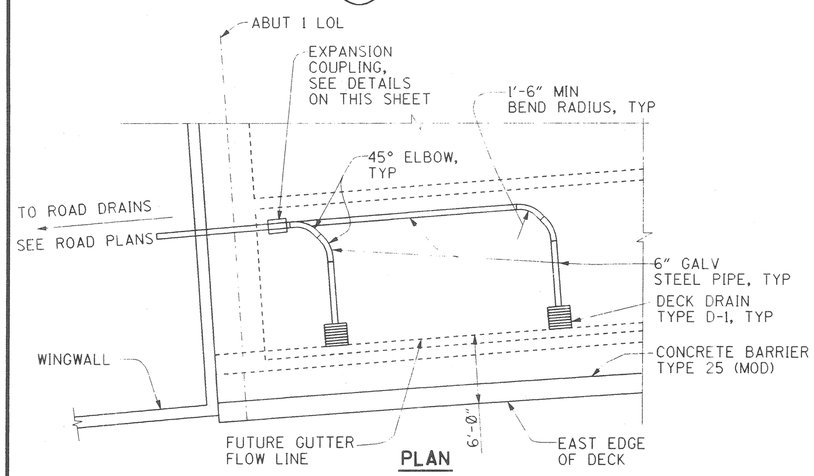

PLAN

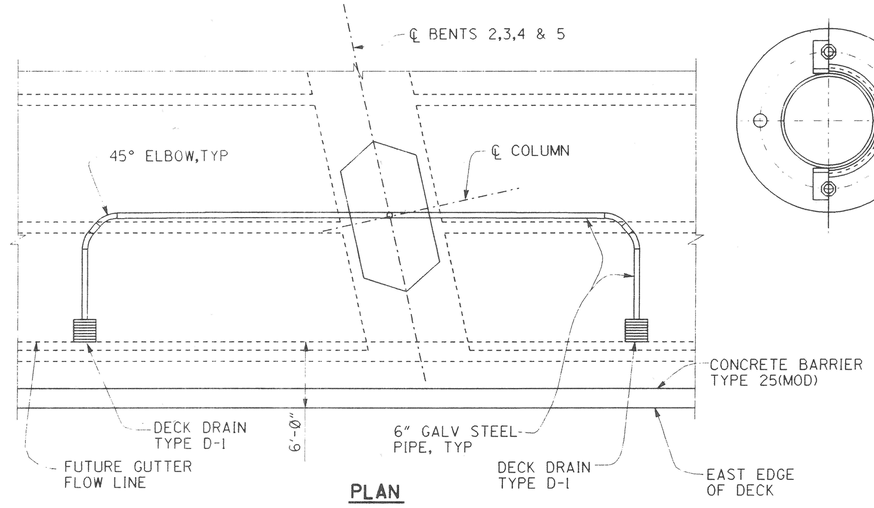

PLAN

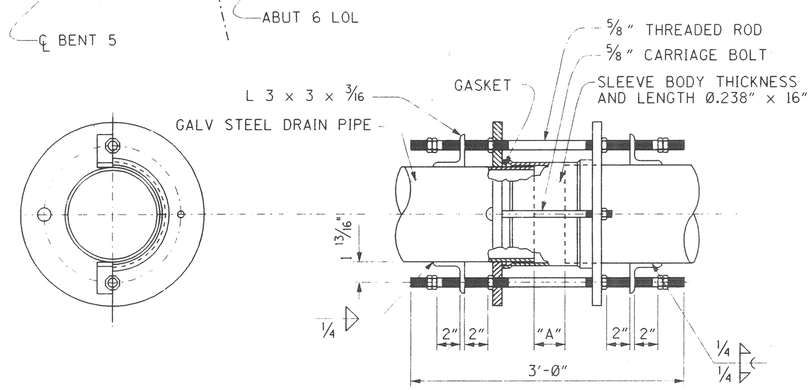

EXPANSION COUPLING

NO SCALE

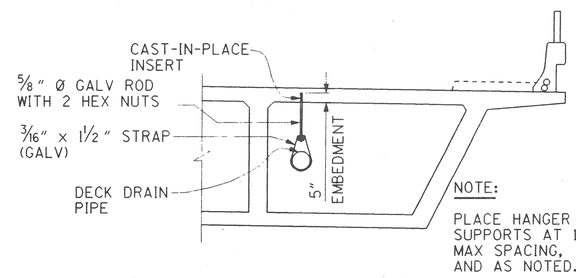

NOTE:

PLACE HANGER SUPPORTS AT 10'-0" MAX SPACING, AND AS NOTED.

HANGER SUPPORT DETAILS

NO SCALE

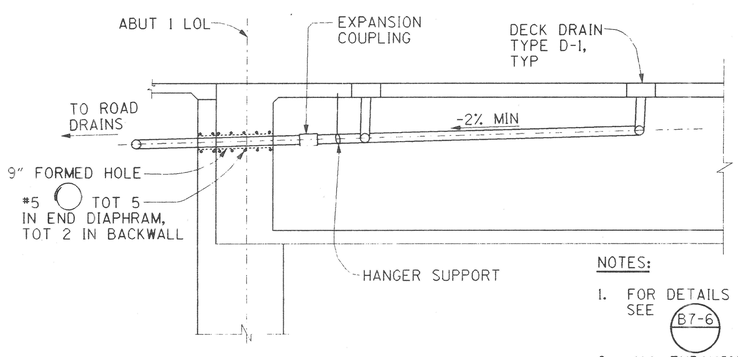

ELEVATION

DRAINS NEAR ABUTMENT 1

NO SCALE

NOTES:

1. FOR DETAILS AND INFORMATION NOT SHOWN, SEE (B7-6)
2. ALL EXPANSION COUPLING HARDWARE TO BE GALVANIZED. FOR DIMENSION "A", SEE "JOINT SEAL ASSEMBLY, (MOVEMENT RATING = 5 1/2") SHEET.

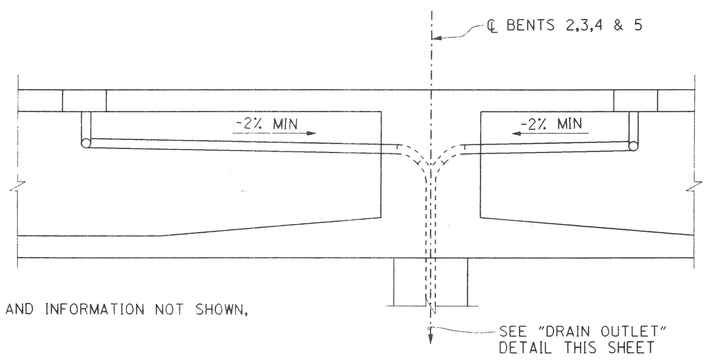

ELEVATION

DRAINS NEAR BENTS 2, 3, 4 & 5

NO SCALE

DR. 3 (16158)
Sheet 68 Of 126

RECORD DRAWING

1 1/2 0 1 2
3 inches on original drawing

MARK	DATE	DESCRIPTION

REVISIONS

PREPARED UNDER RESPONSIBLE CHARGE OF:

Richard A. Hart
REGISTERED PROFESSIONAL ENGINEER
NO. C 039595
EXP. 12-31-97
CIVIL
STATE OF CALIFORNIA
9/20/96

RICHARD A. HART DATE
RCE 39595 (EXP. 12-31-97)

PLANS PREPARED BY:

HNTB
36 EXECUTIVE PARK
SUITE 200
IRVINE, CALIFORNIA 92614

ORANGE COUNTY
ENVIRONMENTAL MANAGEMENT AGENCY

ANTONIO PARKWAY
BRIDGE OVER
SAN JUAN CREEK

DECK DRAIN DETAILS

20/27

DESIGNED Steve A. Whitaker		SHEET
DRAWN L. West	CHECKED R. Hart	68
SCALE AS SHOWN	DATE	DRAWING NO. / OF 126

Dr. 3 (16158

Design Filename: D:\24897\ccad\anfoadi.dgn
Plotted on: 20-SEP 96 09:05 Generated by: SWhitaker

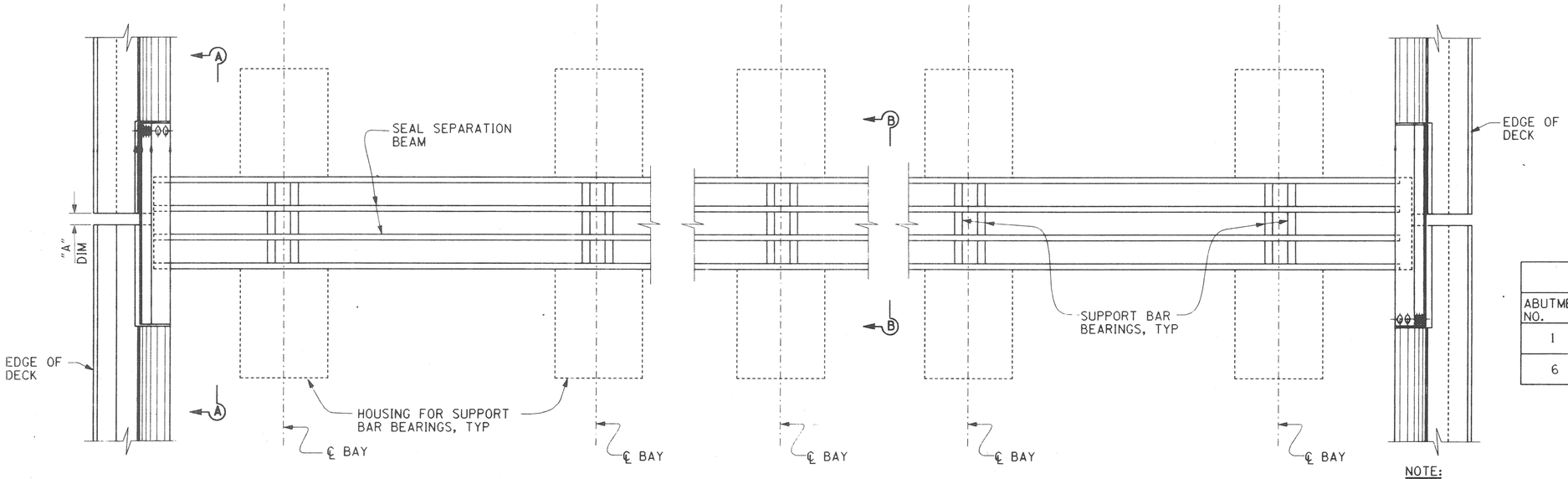

PARTIAL PLAN

NO SCALE

ABUTMENT 1 SHOWN
ABUTMENT 6 SIMILAR

JOINT INFORMATION			"A" DIMENSIONS		
ABUTMENT NO.	MOVEMENT RATING (MR)	SKEW	WINTER	SUMMER	SPRING & FALL
1	5½"	0°	3½"	1½"	2½"
6	5½"	12.4°	3½"	1½"	2½"

NOTE:

JOINT SEAL ASSEMBLY DETAILS INDICATED HERE ARE FOR ILLUSTRATIVE PURPOSE ONLY. DETAIL DESIGN OF THE ASSEMBLY IS THE RESPONSIBILITY OF THE CONTRACTOR.

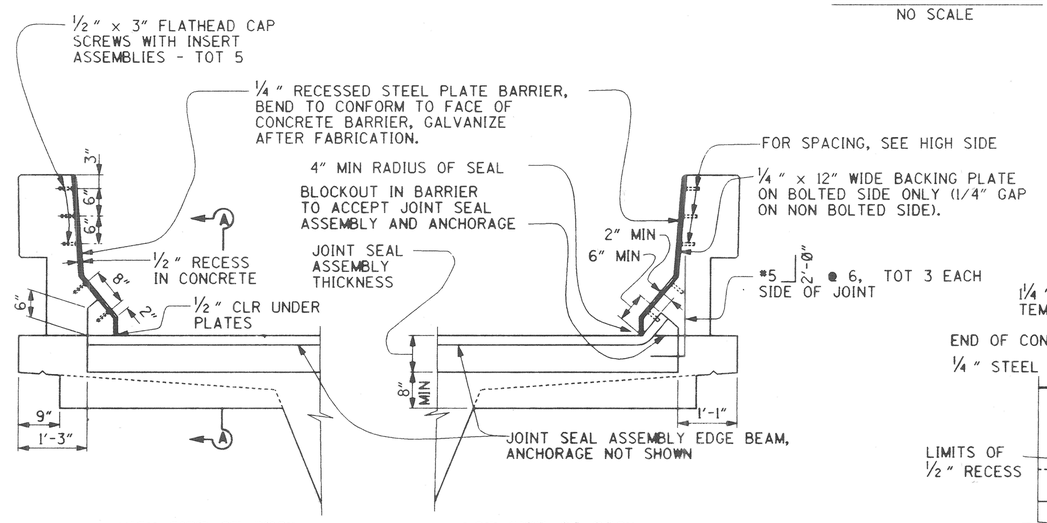

SEAL INSTALLATION

NO SCALE

NOTE:

HOUSING FOR SUPPORT BAR BEARING NOT SHOWN FOR CLARITY

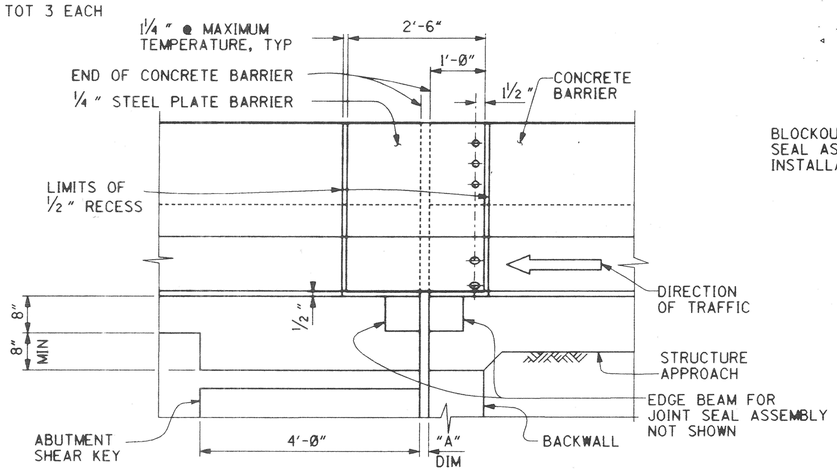

ELEVATION A-A

NO SCALE

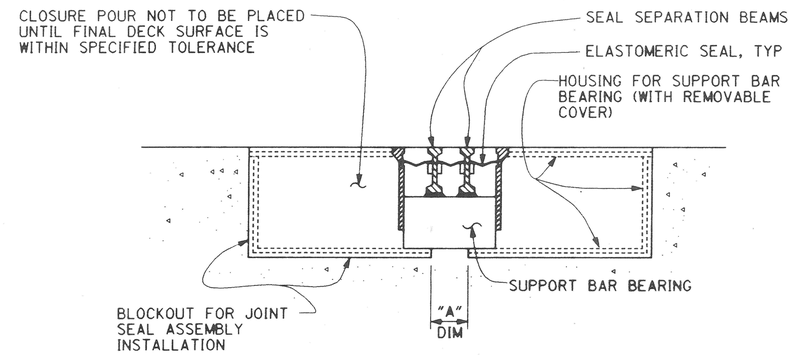

SECTION B-B

NO SCALE

RECORD DRAWING

DR. 3 (16158)
Sheet 69 Of 126

½ 0 1 2
3 inches on original drawing

PLANS PREPARED BY:
HNTB
26 EXECUTIVE PARK
SUITE 200
IRVINE, CALIFORNIA 92614

MARK	DATE	DESCRIPTION

REVISIONS

PREPARED UNDER RESPONSIBLE CHARGE OF:
RICHARD A. HART
RCE 39595 (EXP. 12-31-97)
DATE 9/20/96

ORANGE COUNTY
ENVIRONMENTAL MANAGEMENT AGENCY
ANTONIO PARKWAY
BRIDGE OVER
SAN JUAN CREEK

JOINT SEAL ASSEMBLY
(MOVEMENT RATING=5 1/2")

21/27

DESIGNED Steve A. Whittaker
DRAWN L. West
CHECKED R. Hart
SCALE AS SHOWN
DATE
DRAWING NO.
SHEET 69 OF 126

DR. 3 (16158)

Design Filename: p:\24897\cadd\antojsl.dgn
Plotted on: 20-SEP-1996 09:03 Generated by: WLI

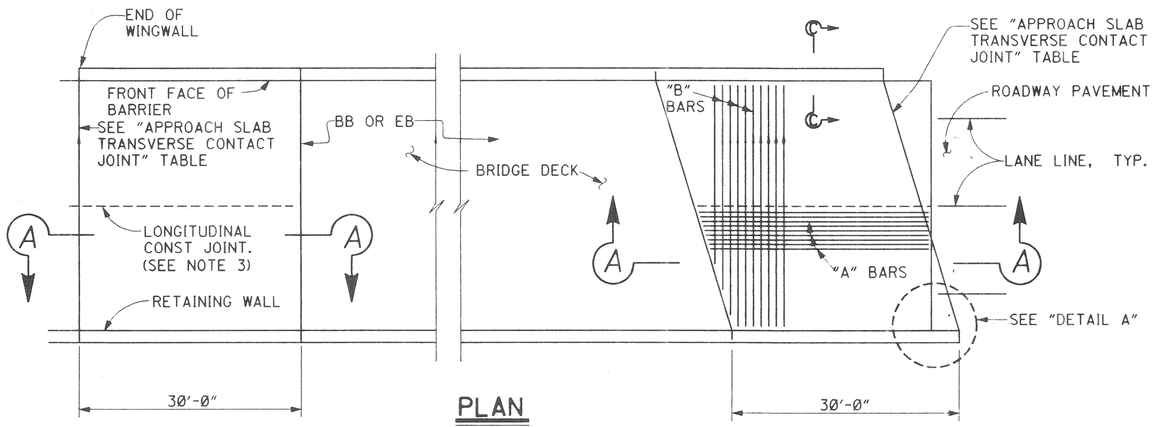

PLAN
NO SCALE

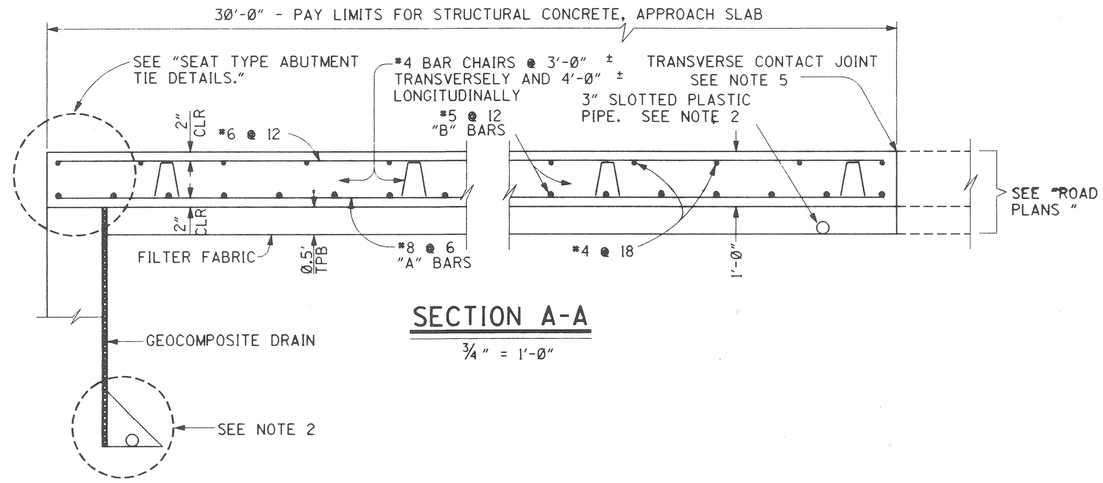

SECTION A-A
3/4" = 1'-0"

APPROACH SLAB TRANSVERSE CONTACT JOINT		
APPROACH SKEW	WITH AC ROADWAY PAVEMENT	WITH PCC ROADWAY PAVEMENT
< 20°	PARALLEL TO FACE OF PAVING NOTCH	PARALLEL TO FACE OF PAVING NOTCH

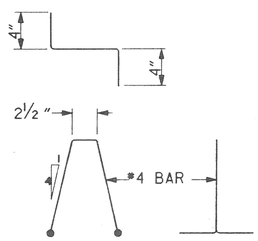

BAR CHAIR DETAIL
1 1/2" = 1'-0"

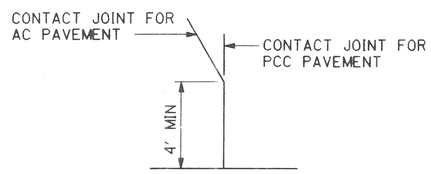

DETAIL A
NO SCALE

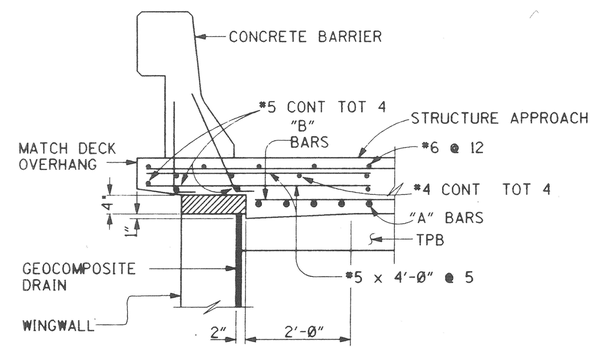

SECTION C-C
3/4" = 1'-0"

NOTES:

1. FOR DETAILS NOT SHOWN, SEE STRUCTURE PLANS
2. FOR DRAINAGE DETAILS, SEE "STRUCTURE APPROACH DRAINAGE DETAILS" SHEET.
3. LONGITUDINAL CONSTRUCTION JOINTS, WHEN PERMITTED BY THE ENGINEER, SHALL BE LOCATED ON LANE LINES AND/OR AT EDGES OR UTILITY VAULTS.
4. END ANGLE AT BEGINNING OF BARRIER TRANSITION, END OF WINGWALL OR END OF STRUCTURE APPROACH, AS APPLICABLE
5. FOR TRANSVERSE CONTACT JOINT WITH NEW PCC PAVING, REFER TO STANDARD PLAN A35-A.
6. AT THE CONTRACTOR'S OPTION, APPROACH SLAB TRANSVERSE REINFORCEMENT MAY BE PLACED PARALLEL TO PAVING NOTCH. SPACING OF TRANSVERSE REINFORCEMENT IS MEASURED ALONG ℄ ROADWAY.

REMOVE ALL POLYSTYRENE.

DR. 3 (16158) Sheet 70 Of 125

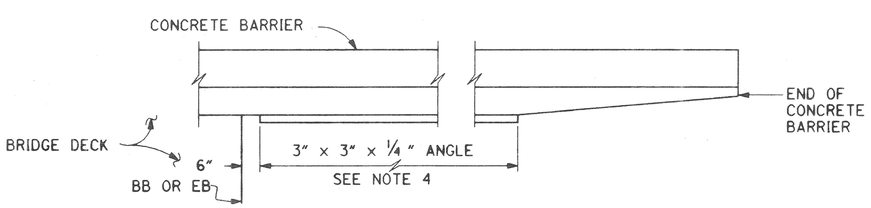

EDGE ANGLE DETAIL
1/2" = 1'-0"

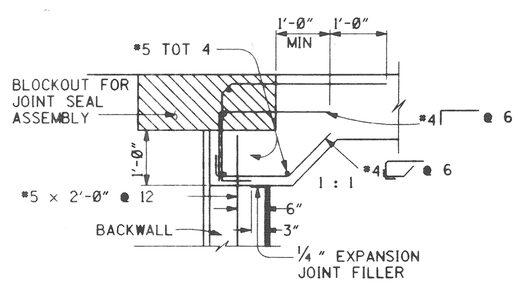

SEAT TYPE ABUTMENT TIE DETAILS (SEE NOTE 1)
3/4" = 1'-0"

RECORD DRAWING

1/2 0 1 2
3 inches on original drawing

MARK	DATE	DESCRIPTION

REVISIONS

PREPARED UNDER RESPONSIBLE CHARGE OF:

RICHARD A. HART RCE 39895 (EXP. 12-31-97) DATE 9/20/96

PLANS PREPARED BY: HNTB 26 EXECUTIVE PARK SUITE 200 IRVINE, CALIFORNIA 92614

ORANGE COUNTY ENVIRONMENTAL MANAGEMENT AGENCY

ANTONIO PARKWAY BRIDGE OVER SAN JUAN CREEK

STRUCTURE APPROACH TYPE N(30S)

22/27

DESIGNED Steve A. Whitaker | DRAWN L. West | CHECKED R. Hart | SCALE AS SHOWN | DATE | DRAWING NO.

SHEET 70 OF 126

DR. 3 (16158)

Design Filename: p:\24897\cadd\xs221R.dgn WLI
Plotted on: 20-SEP-1996 09:07 Generated by:

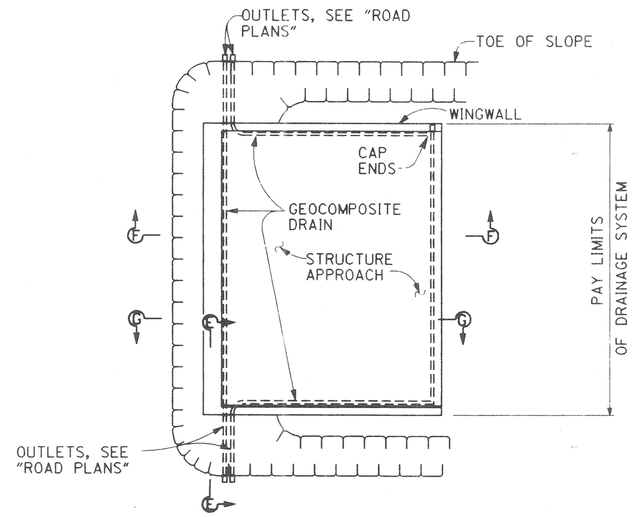

TYPICAL PLAN

NO SCALE

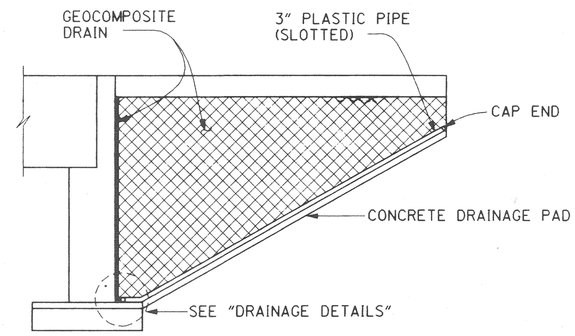

SECTION F-F

NO SCALE

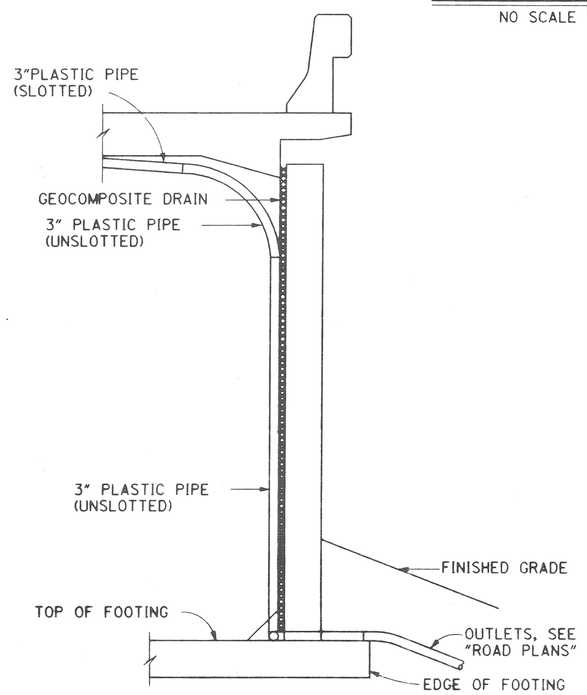

SECTION E-E

NO SCALE

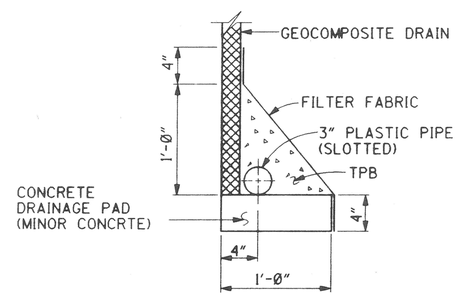

WITHOUT FOOTING

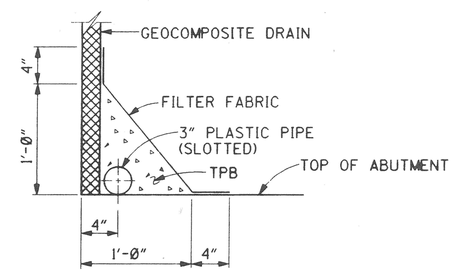

WITH FOOTING

DRAINAGE DETAILS

NO SCALE

NOTE:

BENDS AND JUNCTIONS IN 3" PLASTIC PIPE ARE 30" RADIUS MIN.

DR. 3 (16158)
Sheet 71 Of 126

RECORD DRAWING

1 ½ 0 1 2
3 inches on original drawing

PLANS PREPARED BY:
HNTB
36 EXECUTIVE PARK
SUITE 200
IRVINE, CALIFORNIA 92614

MARK	DATE	DESCRIPTION

REVISIONS

PREPARED UNDER RESPONSIBLE CHARGE OF:
Richard A. Hart
NO. C 039695
EXP. 12-31-97
CIVIL
STATE OF CALIFORNIA
4/22/96
RICHARD A. HART
RCE 39695 (EXP. 12-31-97)
DATE

ORANGE COUNTY
ENVIRONMENTAL MANAGEMENT AGENCY

ANTONIO PARKWAY
BRIDGE OVER
SAN JUAN CREEK

STRUCTURE APPROACH
DRAINAGE DETAILS

23/27

DESIGNED Steve A. Whitaker
DRAWN L. West
CHECKED R. Hart
SCALE AS SHOWN
DATE
DRAWING NO.
SHEET 71 OF 126

Design Filename: p:\24897\cadd\xs22if.dgn
Plotted on: 20-SEP-1996 09:08 Generated by: WLI

DR. 3 (16158)

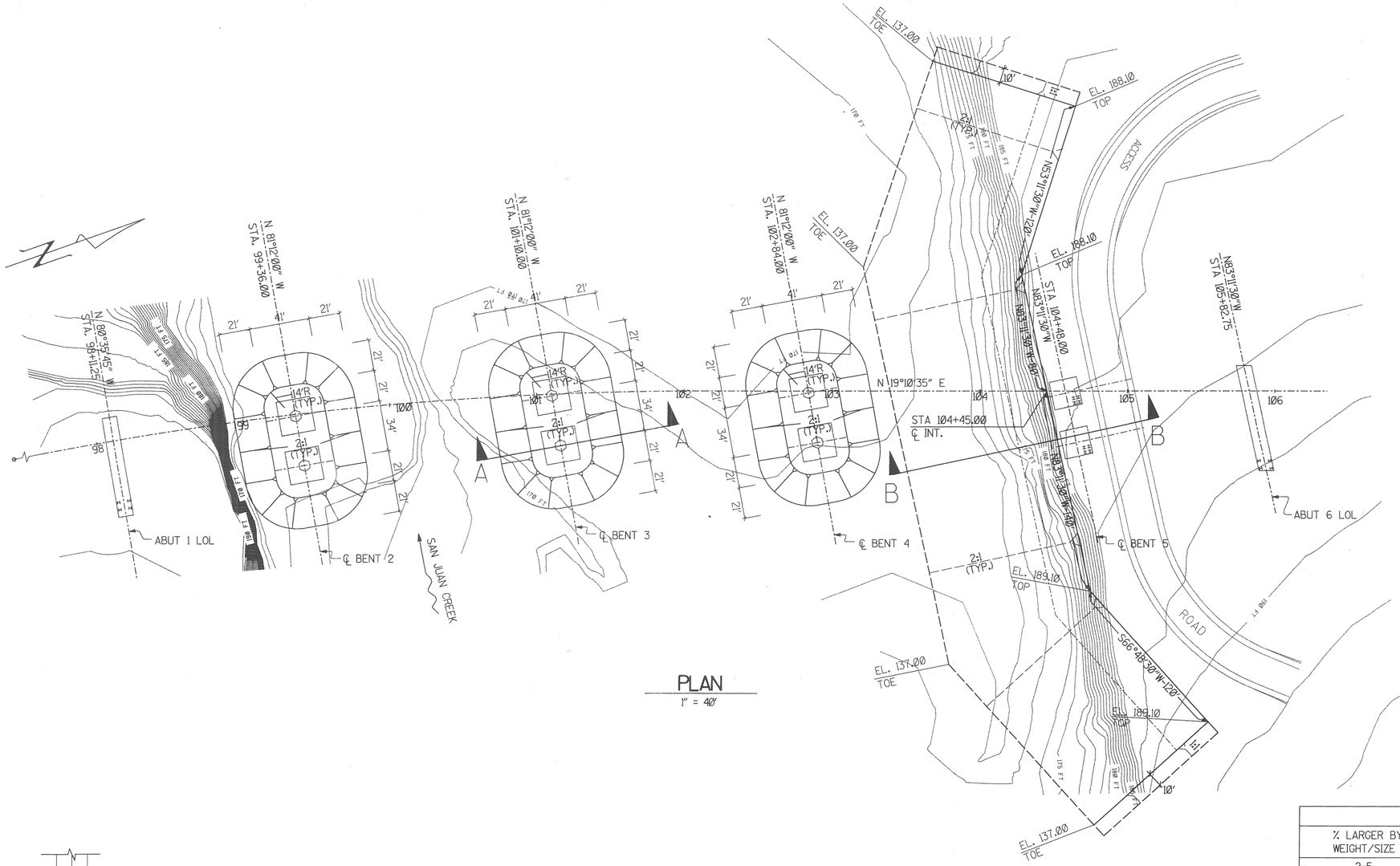

PLAN

1" = 40'

GRADATION		
% LARGER BY WEIGHT/SIZE	RIPRAP (LB)	GRAVEL FILTER (INCHES)
2-5	1,200	5
30-50	500	4
50-65	330	3
90-98	140	1

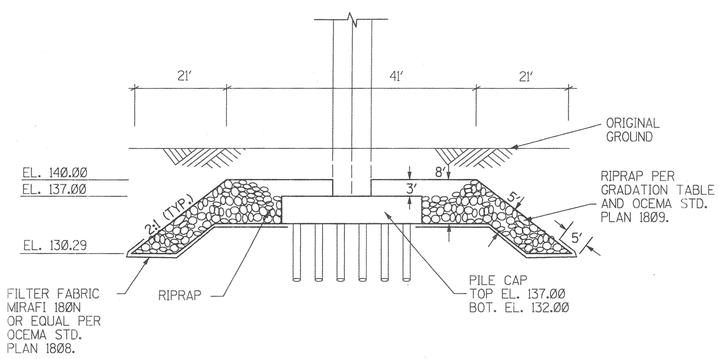

SECTION A-A

N.T.S.

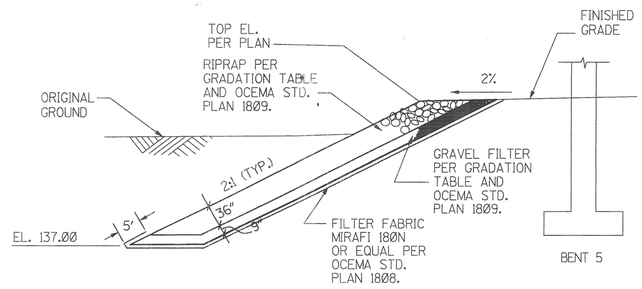

SECTION B-B

N.T.S.

NOTES:

1. CONTOURS SHOWN ARE ORIGINAL GROUND.
2. CONTRACTOR SHALL VERIFY ALL CONTROLLING FIELD DIMENSIONS BEFORE ORDERING OR FABRICATING ANY MATERIALS.

RECORD DRAWING

DR. 3 (16158)
Sheet 72 Of 126

MARK	DATE	DESCRIPTION

REVISIONS

PLANS PREPARED BY:

sla
3150 BRISTOL STREET
SUITE 500
COSTA MESA, CA 92626

PREPARED UNDER RESPONSIBLE CHARGE OF:

REGISTERED PROFESSIONAL ENGINEER
RUH-MING LI
NO. 36777
EXP. 6-30-00
CIVIL
STATE OF CALIFORNIA

RUH-MING LI
RCE 36777 (EXP. 6-30-00)

9/18/97
DATE

ORANGE COUNTY
ENVIRONMENTAL MANAGEMENT AGENCY

ANTONIO PARKWAY
BRIDGE OVER
SAN JUAN CREEK

EROSION PROTECTION PLAN

24/27

DESIGNED	JOHN LEE		SHEET
DRAWN P.F.	CHECKED Y.H.C.		72
SCALE AS SHOWN	DATE 8-24-96	DRAWING NO.	OF 126

DR. 3 (16158)

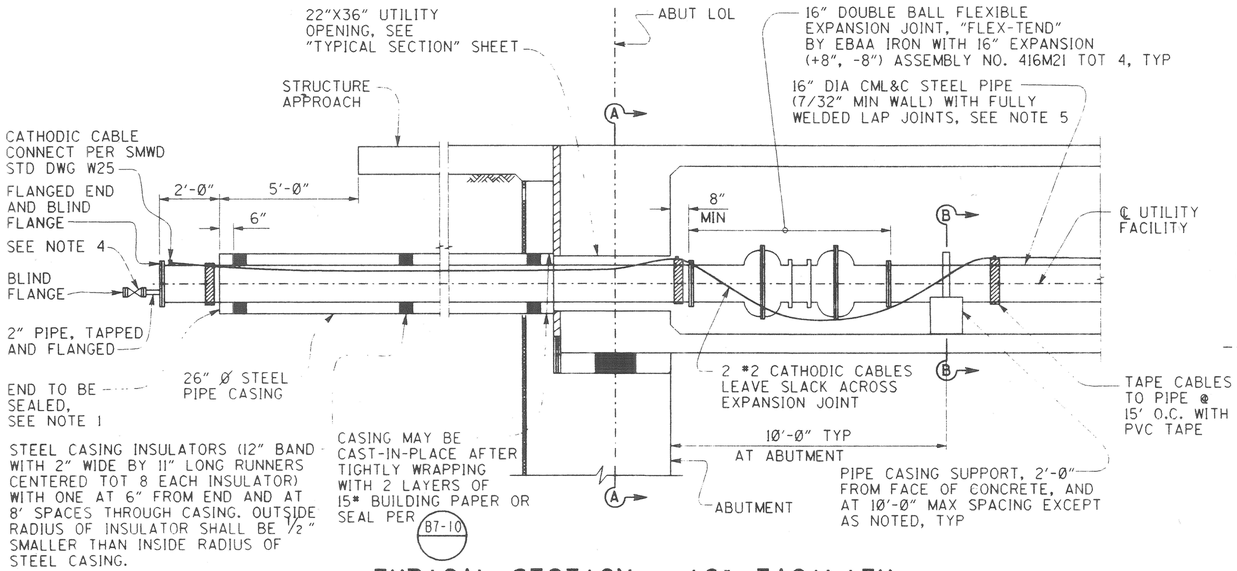

TYPICAL SECTION - 16" FACILITY

3/8" = 1'-0"

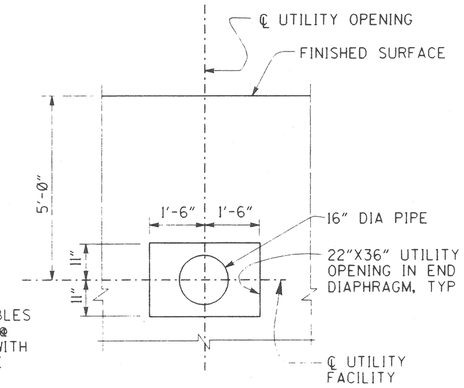

SECTION A-A

NO SCALE

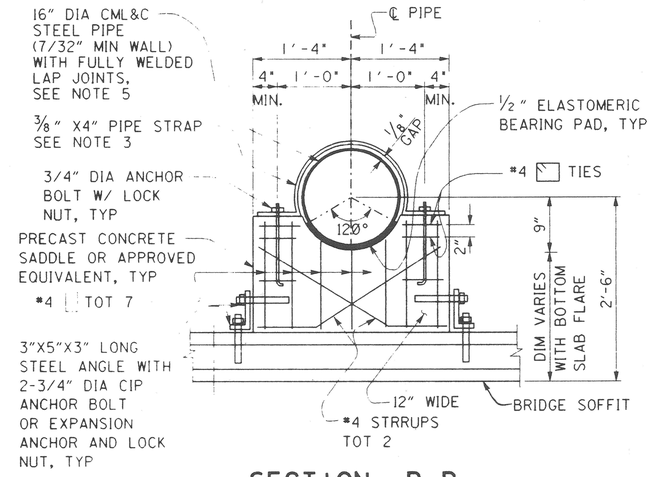

SECTION B-B

1" = 1'-0"

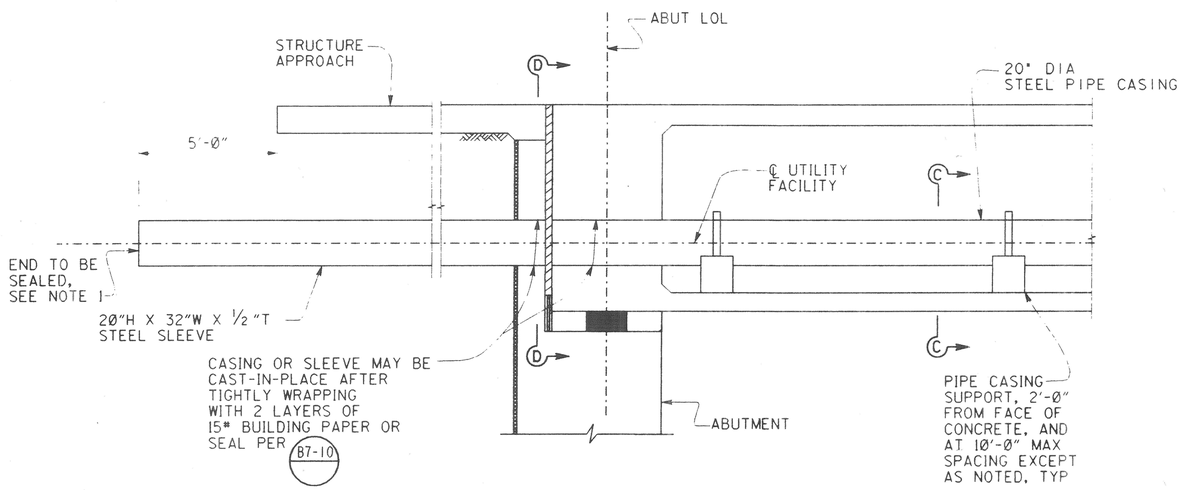

TYPICAL SECTION - FUTURE 8" FACILITY

3/8" = 1'-0"

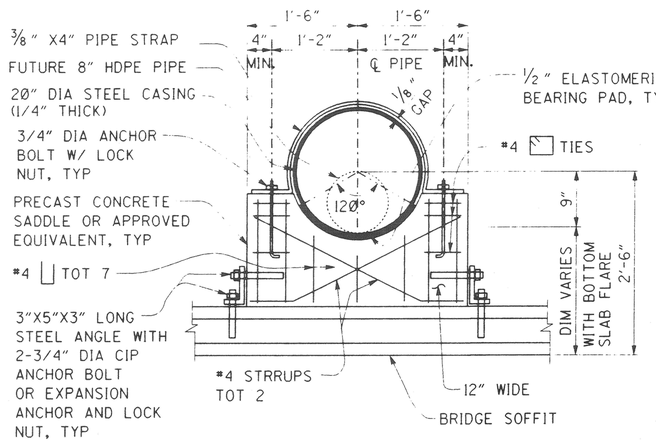

SECTION C-C

1" = 1'-0"

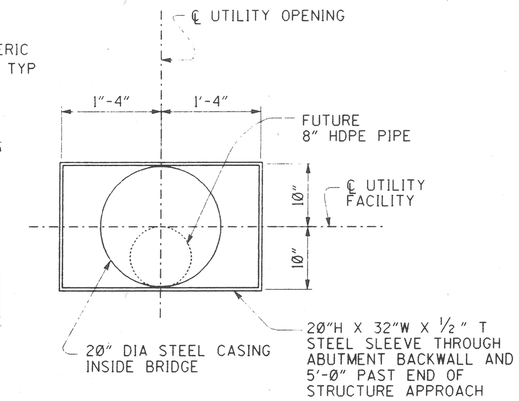

SECTION D-D

1" = 1'-0"

NOTES:

1. SEAL END OF CASING WITH A METHOD ACCEPTABLE TO THE ENGINEER.
2. THE CONTRACTOR SHALL VERIFY ALL CONTROLLING FIELD DIMENSIONS BEFORE ORDERING OR FABRICATING ANY MATERIALS.
3. PIPE STRAPS SHALL NOT BE TIGHTENED UNTIL THE BRIDGE HAS BEEN POST-TENSIONED.
4. PROVIDE 2" FLANGED GATE VALVE (KEY OPER.) AT ABUTMENT 1, AND 2" AIR RELEASE AND VACUUM VALVE AT ABUTMENT 6.
5. SEE SMWD STANDARD DRAWING W24 FOR WELDED PIPE JOINT DETAILS. CLOSURE WELDS IN PIPE JOINTS WITHIN THE BRIDGE AT CENTER SPAN, BENT, AND ABUTMENT LOCATIONS ARE TO BE MADE AFTER THE BRIDGE DECK IS PLACED, POST-TENSIONING COMPLETED, AND FALSEWORK REMOVED. CLOSURE WELDS AT THE END OF EACH SPAN SHOULD BE AT THE FIRST JOINT WITHIN THE SPAN. THERE SHALL NOT BE ANY PIPE JOINTS WITHIN 2 PIPE DIAMETERS OF THE CENTERLINE OF ANY BENT OR ABUTMENT, EXCEPT AS NOTED.
6. CONTRACTOR SHALL REMOVE ALL FALSEWORK FROM CELLS HOUSING SMWD FACILITIES.

DR. 3 (16158)
Sheet 73 Of 126

1/2 0 1 2
3 inches on original drawing

RECORD DRAWING

RECOMMENDED FOR APPROVAL - SMWD
DISTRICT ENGINEER
RCE 39595 (EXP. 12/31/97)

PLANS PREPARED BY:
HNTB
36 EXECUTIVE PARK
SUITE 200
IRVINE, CALIFORNIA 92614

MARK	DATE	DESCRIPTION

REVISIONS

PREPARED UNDER RESPONSIBLE CHARGE OF:
RICHARD A. HART
RCE 39595 (EXP. 12-31-97)
DATE 10/8/96

ORANGE COUNTY
ENVIRONMENTAL MANAGEMENT AGENCY

ANTONIO PARKWAY
BRIDGE OVER
SAN JUAN CREEK

SMWD UTILITY DETAILS

25/27

DESIGNED Steve A. Whitaker
DRAWN WWL/SAW
CHECKED R. Hart
SCALE AS SHOWN
DATE
DRAWING NO.
SHEET 73 OF 126

DR. 3 (16158)

Design Filename: p:\24897\cadd\antfouth.ign
Plotted on: 08-OCT-1996 16:25 Generated by: SWhitaker

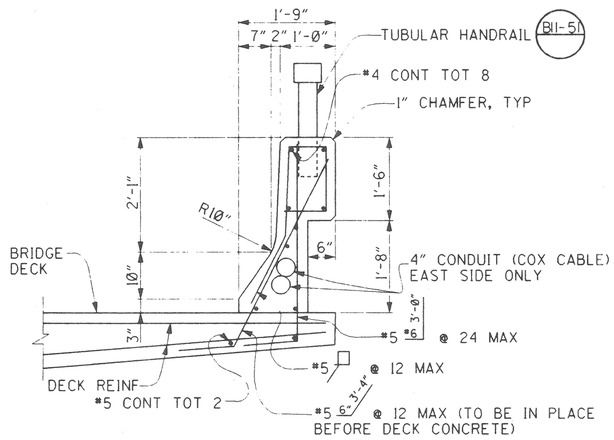

CONCRETE BARRIER TYPE 25 MODIFIED

1" = 1'-0"

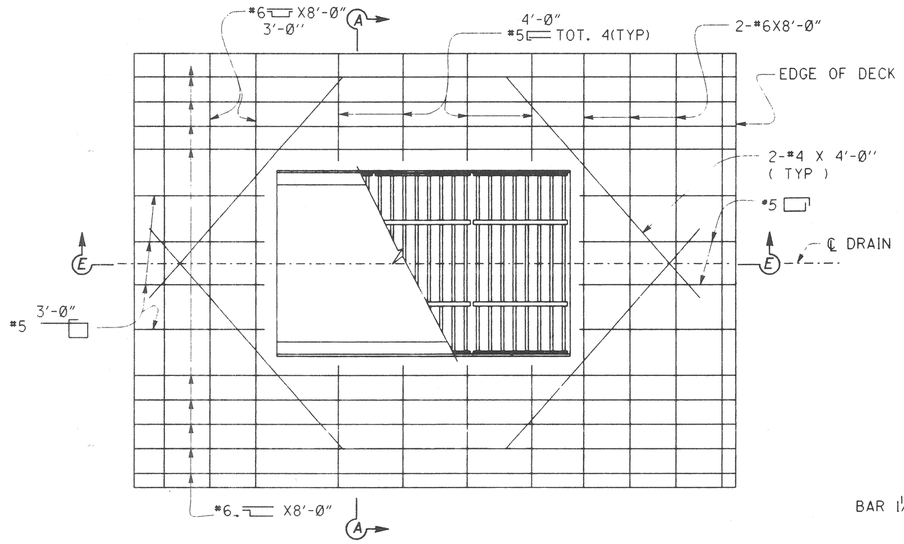

PLAN

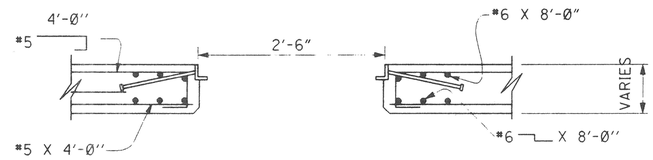

SECTION A-A

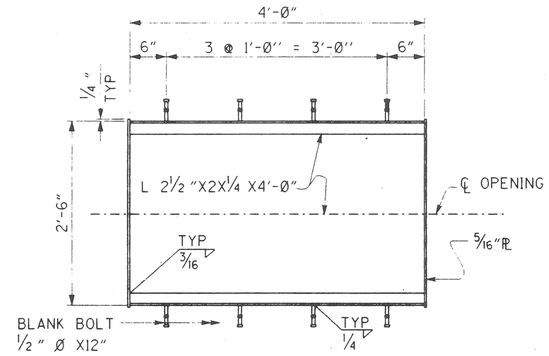

FRAME PLAN

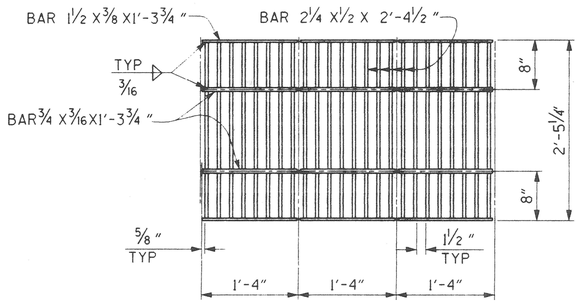

GRATE PLAN

NOTE: GRATING CONSISTS OF 3 IDENTICAL UNITS.

SOFFIT ACCESS OPENING DETAILS

NO SCALE

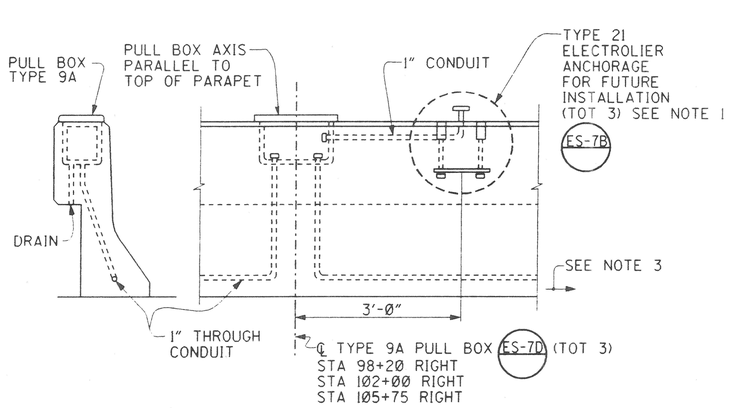

PULL BOX AND ELECTROLIER ANCHORAGE DETAIL

NO SCALE

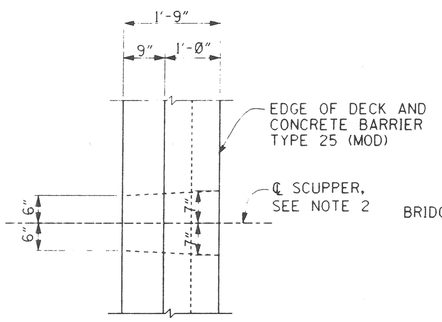

PLAN

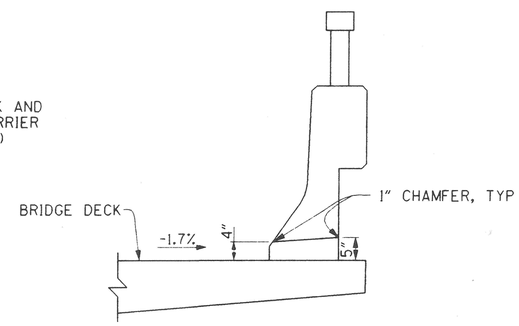

ELEVATION

SCUPPER DRAIN DETAILS

1 "=1'-0"

NOTES:

1. FOR POST ANCHORAGE DETAILS, END TRANSITION DETAILS, PULL BOX & ELECTROLIER ANCHORAGE REINF, AND OTHER BARRIER DETAILS NOT SHOWN SEE CALTRANS STANDARD PLAN BII-53.
2. SCUPPER DRAIN TO BE PLACED IN EAST SIDE CONCRETE BARRIER TYPE 25 (MOD) AT 20'-0" SPACING FROM BB TO EB.
3. FOR DETAILS THROUGH EXPANSION JOINTS SEE ES-7C

DR. 3 (16158)
Sheet 74 Of 126

1/2 0 1 2
3 Inches on original drawing

PLANS PREPARED BY:
HNTB
36 EXECUTIVE PARK
SUITE 200
IRVINE, CALIFORNIA 92614

MARK	DATE	DESCRIPTION

REVISIONS

PREPARED UNDER RESPONSIBLE CHARGE OF:
Richard A. Hart
REGISTERED PROFESSIONAL ENGINEER
Richard A. Hart
NO. C 039595
EXP. 12-31-97
CIVIL
STATE OF CALIFORNIA
10/8/96
RICHARD A. HART — DATE
RCE 39595 (EXP. 12-31-97)

ORANGE COUNTY
ENVIRONMENTAL MANAGEMENT AGENCY
ANTONIO PARKWAY
BRIDGE OVER
SAN JUAN CREEK

MISCELLANEOUS DETAILS

26/27

DESIGNED Steve A. Whitaker
DRAWN L. West
CHECKED R. Hart
SCALE AS SHOWN
DATE
DRAWING NO.
SHEET 74 OF 126

Design Filename: D:\24837-Cadd\ontomdl.dgn
Plotted on: 08-OCT-1996 14:00 Generated By: Swhitaker

DR 3 (16158)

ANTONIO PARKWAY
SAN JUAN CREEK BRIDGE

GOFFMAN, McCORMICK & URBAN, INC.

PROJECT 95-48 PLATE 3

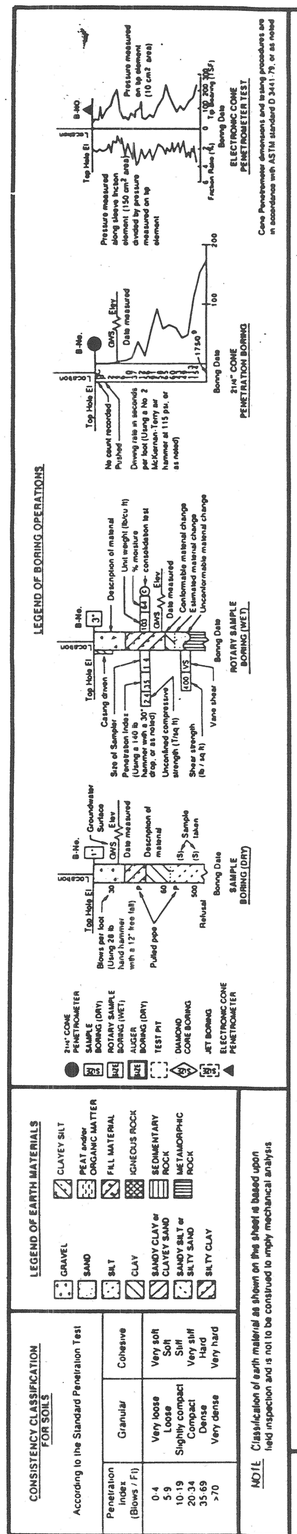

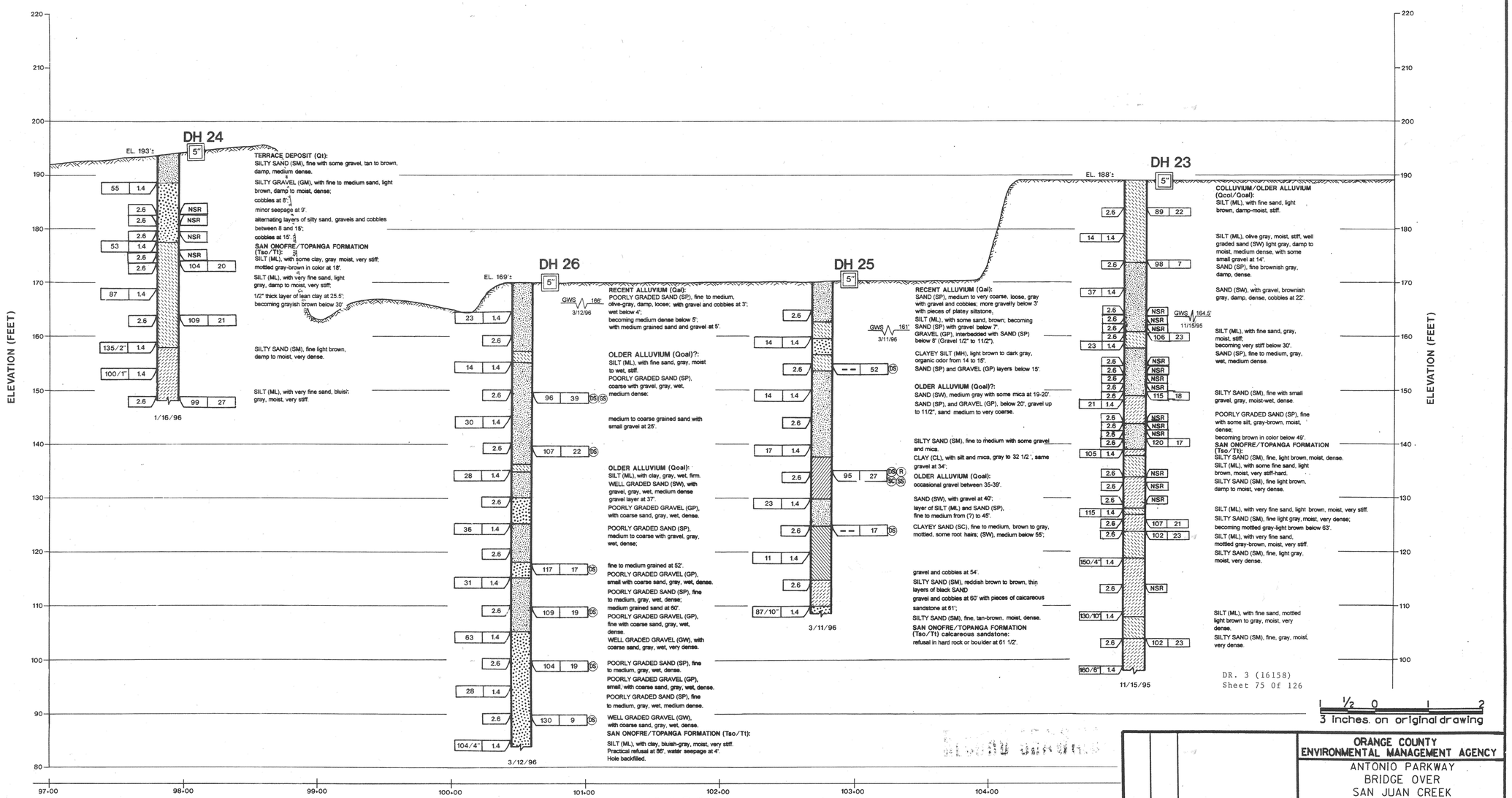

PROFILE
VERTICAL SCALE: 1" = 10'

MARK	DATE	DESCRIPTION

REVISIONS

PREPARED UNDER SUPERVISION OF

ARS 8-21-96
DATE

ORANGE COUNTY ENVIRONMENTAL MANAGEMENT AGENCY

ANTONIO PARKWAY
BRIDGE OVER
SAN JUAN CREEK

LOG OF TEST BORINGS

27/27

DESIGNED			
DRAWN JDP	CHECKED ARS		SHEET 75 OF 126
SCALE AS SHOWN	DATE	DRAWING NO.	

DESIGN OVERSIGHT

SIGN OFF DATE

DRAWN BY JDP

CHECKED BY ARS

ARS
FIELD INVESTIGATOR

DATE 8-21-96

Gary Kilbourn RCE 39980

Andrew R. Stone CEG 1648

PROJECT ENGINEER

BRIDGE NO.

POST MILE

ORIGINAL SCALE IN INCHES FOR REDUCED PLANS 0 1 2 3

CU
EA

DR 3 (16158)