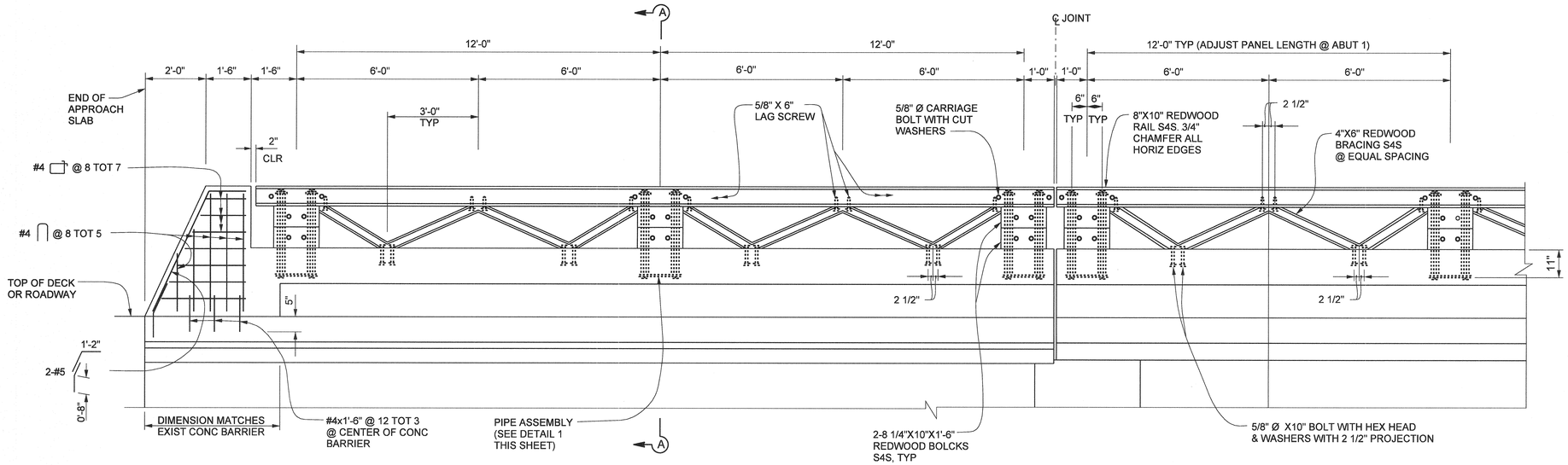

TYPICAL WINGWALL WOOD RAILING (SEE NOTE 2)

NO SCALE

TYPICAL DECK WOOD RAILING (SEE NOTE 2)

NO SCALE

RC BOX GIRDER SHOWN, RC SLAB SIMILAR

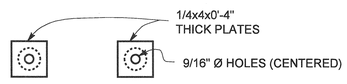

TOP PLATES

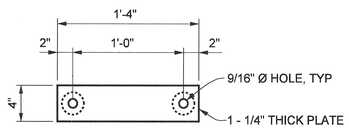

BOTTOM PLATE

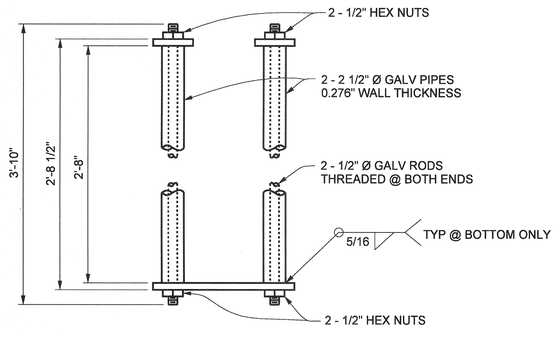

DETAIL 1

1 1/2" = 1'-0"

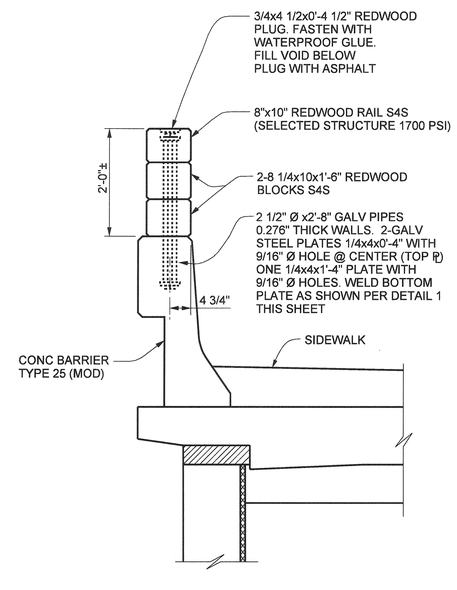

SECTION A-A

3/4" = 1'-0"

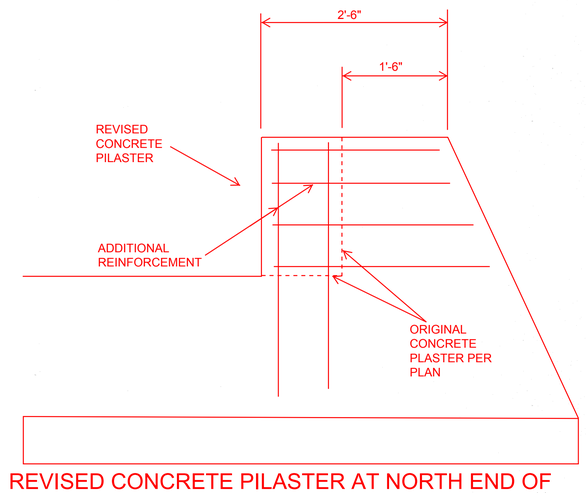

REVISED CONCRETE PILASTER AT NORTH END OF BRIDGE BARRIER RAIL ON WEST SIDE

1/2 0 2
3 Inches on original drawing

NOTES:

1. THE CONTRACTOR SHALL VERIFY ALL CONTROLLING FIELD DIMENSIONS BEFORE ORDERING OR FABRICATING ANY MATERIAL.
2. THE NEW REDWOOD BEAM RAILING IS SHOWN, THE SALVAGING AND RECONSTRUCTING REDWOOD BEAM RAILING FROM THE REMOVED CONC BARRIER TYPE 25 (MOD) IS SIMILAR.

AS BUILT

CORRECTION BY: MN
CONTRACT NO.: ER28121
DATE: 12/30/2009

MARK	DATE	DESCRIPTION

REVISIONS

PREPARED UNDER RESPONSIBLE CHARGE OF:

REGISTERED PROFESSIONAL ENGINEER Yung-Nien Wang NO. C 43559 EXP. 6-30-08 CIVIL STATE OF CALIFORNIA

Yung-Nien Wang
RCE C 43559 (EXP. 6-30-06)
10/31/06
DATE

PLANS PREPARED BY:
HNTB
HNTB Corporation
200 E. SANDPOINTE AVENUE, SUITE 200
SANTA ANA, CALIFORNIA 92707
TEL (714) 460-1600 FAX (714) 460-1610

ORANGE COUNTY
RESOURCES & DEVELOPMENT MANAGEMENT DEPT

ANTONIO PARKWAY
WILDLIFE
UNDERCROSSING (WIDEN)

REDWOOD
BEAM RAILING

DESIGNED J. WANG
DRAWN JA. WANG
CHECKED F. JEANG
SCALE AS SHOWN
DATE 9/19/06
DRAWING NO.
SHEET 64 OF 72

Date Plotted:
File Name: J:\34092\CADD\Strc\sheets\antoniopkwy-S-23.dgn

Border sheet last modified 09-Nov-1999