DIST	COUNTY	ROUTE	POST MILES TOTAL PROJECT	SHEET NO.	TOTAL SHEETS
12	ORA			2	7

Rick C. Chan
REGISTERED CIVIL ENGINEER

PLANS APPROVAL DATE

REGISTERED PROFESSIONAL ENGINEER — RICK CHAN No. C-55392 Exp. 12/31/99 CIVIL — STATE OF CALIFORNIA

LIM & NASCIMENTO ENGINEERING
1971 East Fourth Street, Suite 200
Santa Ana, California 92705

Brown & Root, INC.
1000 South Fremont Avenue
Alhambra, California 91803-1300

UNLESS OTHERWISE NOTED, ALL UTILITIES ARE TO BE PROTECTED IN PLACE.

NOTE:

For "GENERAL NOTES", see "PIER NOS. 2 & 5 RETROFIT DETAILS NO. 2" sheet.

RETROFIT LEGEND:

- (AR) Abutment Retrofit. Add seat extenders
- (BR) Bent Retrofit. Enhance lateral capacity by dowelling #20 bars into bent cap and pier wall

LEGEND:

- Indicates existing structure
- Indicates new construction
- Indicates point of existing minimum vertical clearance
- Indicates existing street light
- (1) Indicates existing utility opening with Southern California Edison Company conduits
- (2) Indicates existing utility opening with City of Huntington Beach 24"± Dia water line
- (3) Indicates one existing 6"± Dia water line and 2 existing 3"± Dia utility conduits resting on grade along face of abutment
- Indicates direction of traffic

OWNER - COUNTY OF ORANGE
PERD/OPERATIONS RON BROADBELT @ 567-6222.

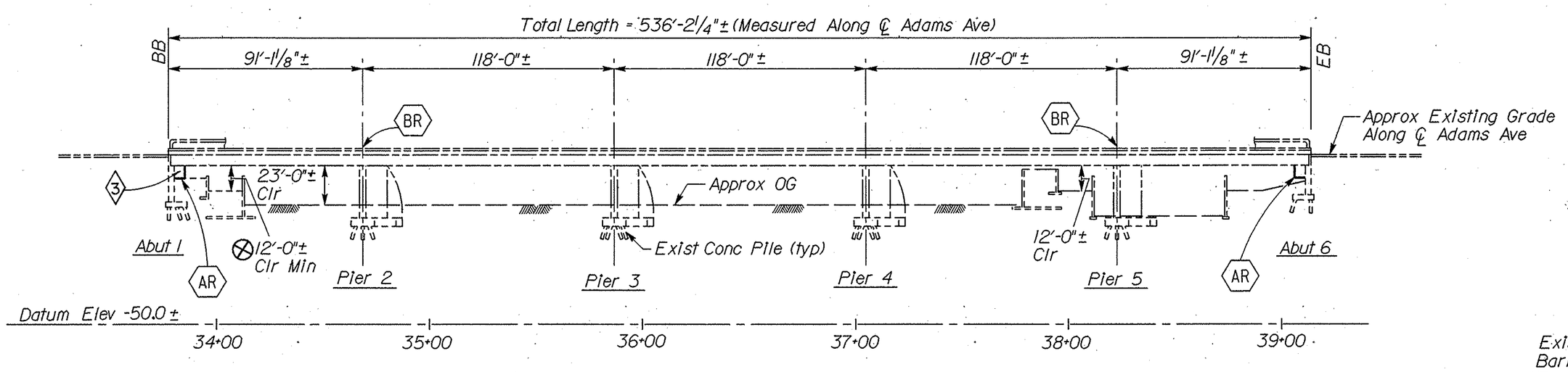

ELEVATION

Scale: 1" = 40'

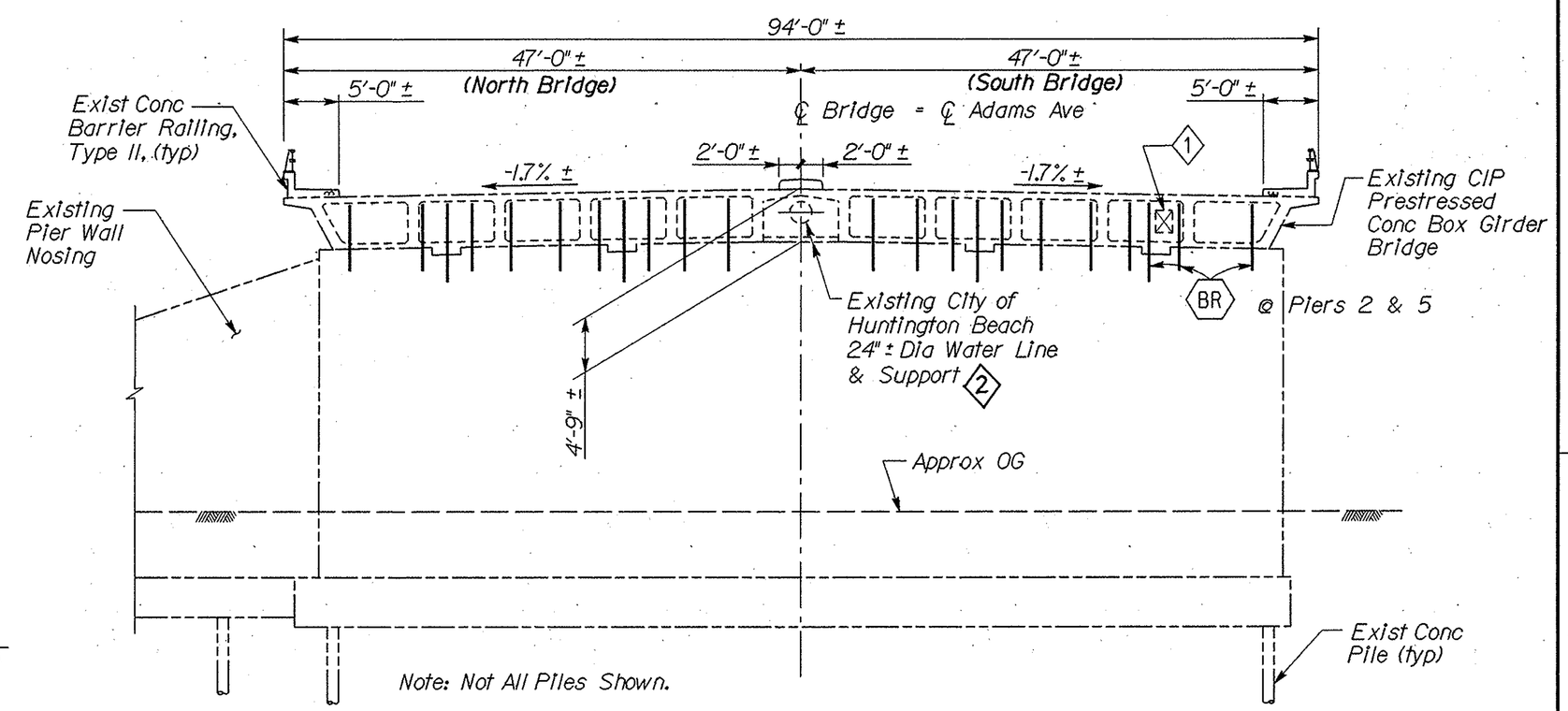

TYPICAL SECTION

Scale: 1" = 10'

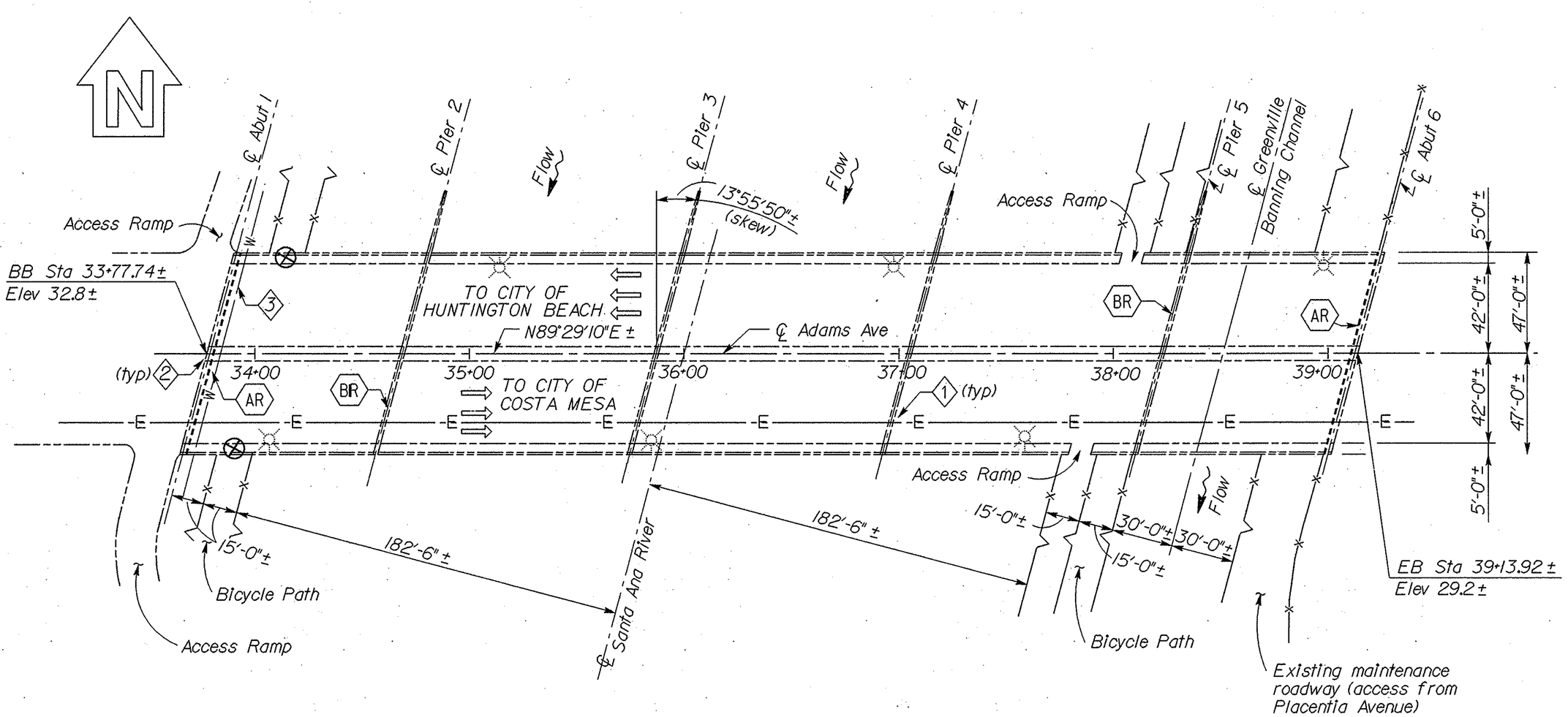

PLAN

Scale: 1" = 40'

INDEX TO PLANS

SHEET NO.	TITLE
1	GENERAL PLAN
2	ABUTMENT RETROFIT DETAILS NO. 1
3	ABUTMENT RETROFIT DETAILS NO. 2
4	ABUTMENT RETROFIT DETAILS NO. 3
5	PIER NOS. 2 & 5 RETROFIT DETAILS NO. 1
6	PIER NOS. 2 & 5 RETROFIT DETAILS NO. 2

STANDARD PLANS DATED JULY, 1992

A10A Abbreviations
A10B Symbols

Note:
The Contractor shall verify all controlling field dimensions before ordering or fabricating any material.

SHAWN SUN DESIGN OVERSIGHT	DESIGN	BY C.RUSSELL / R.CHAN	CHECKED W.YU	LOAD FACTOR DESIGN			
	DETAILS	BY E.MONTANO	CHECKED R.CHAN	LAYOUT	BY R.CHAN	CHECKED T.McGRADY	
SIGNOFF DATE	QUANTITIES	BY R.CHAN	CHECKED W.YU	SPECIFICATIONS	BY M.ZAHEDI	PLANS AND SPECS COMPARED M.ZAHEDI	

PREPARED FOR THE COUNTY OF ORANGE

TIM McGRADY
PROJECT ENGINEER

BRIDGE NO. 55C-0344
POST MILE

EARTHQUAKE RETROFIT
ADAMS AVENUE BRIDGE OVER SANTA ANA RIVER
GENERAL PLAN

15GP1344.DGN-19 09-20-97 RF=55CPLN.BDR.BDR

ORIGINAL SCALE IN INCHES FOR REDUCED PLANS 0 1 2 3

CU 12 152
EA L02105

DISREGARD PRINTS BEARING EARLIER REVISION DATES

REVISION DATES (PRELIMINARY STAGE ONLY) | SHEET 1 | OF 6

20-SEP-1997 10:43

/usr2/avoe/cm0015/15gp1344.